TAB 7

PRODUCTS

MODEL KEY

2016 AERIAL APPARATUS

MAPC 1 HIGH-END 102 FOOT REAR MOUNT AERIAL PLATFORM

MAPC 2 HIGH-END 100 FOOT MID MOUNT AERIAL PLATFORM

MAPC 3 MID-RANGE 102 FOOT REAR MOUNT AERIAL PLATFORM

MAPC 4 MID-RANGE 100 FOOT MID MOUNT AERIAL PLATFORM

MAPC 5 BASIC 102 FOOT REAR MOUNT AERIAL PLATFORM

MAPC 6 BASIC 100 FOOT MID MOUNT AERIAL PLATFORM

MAPC 7 HIGH-END 79 FOOT SINGLE REAR AXLE REAR MOUNT AERIAL QUINT

MAPC 8 HIGH-END 109 FOOT REAR MOUNT AERIAL QUINT

MAPC 9 HIGH-END 100 FOOT MID MOUNT AERIAL QUINT

MAPC 10 HIGH-END 101 FOOT TRACTOR DRAWN AERIAL QUINT

MAPC 11 MID-RANGE 79 FOOT SINGLE REAR AXLE REAR MOUNT AERIAL QUINT

MAPC 12 MID-RANGE 109 FOOT REAR MOUNT AERIAL QUINT

MAPC 13 MID-RANGE 100 FOOT MID MOUNT AERIAL QUINT

MAPC 14 MID-RANGE 101 FOOT TRACTOR DRAWN AERIAL QUINT

MAPC 15 BASIC 79 FOOT SINGLE REAR AXLE REAR MOUNT AERIAL QUINT

MAPC 16 BASIC 109 FOOT REAR MOUNT AERIAL QUINT

MAPC 17 BASIC 100 FOOT MID MOUNT AERIAL QUINT

MAPC 18 BASIC 101 FOOT TRACTOR DRAWN AERIAL QUINT

KME

HIGH END FCAM 102 FOOT

REAR MOUNT AERIAL

PLATFORM

“QUINT”

MAPC 1

Quote SO

MAPC/FCAM	MAPC 1 HIGH-END 102' REAR MOUNT PLATFORM

Exp. Date:	10/20/2016	
Quote No:	10002-0031	
1 MODEL:	00DEVICE02	REAR MOUNT PLATFORM
2 LETTER:	LETTER 09	LETTERING & STRIPING, 102' RM
3 COMP ACC:	000COMP001	COMPARTMENT ACCESSORIES REARMOUNT AERIAL
4 AC/ELEC:	000AC004	HD RM WITH PUMP GEN/ELEC AC
5 MISC EQU:	000EQIUP	MISC AND LOOSE EQUIPMENT (AERIAL)
6 WARRANTY:	WARNTY-01	AERIAL WARRANTY PACKAGE W/PUMP
SPECIAL:	00000001	SPECIAL, QUOTE OVERRIDE
DEALER:		Dealer Parts

10/04/2016

PART NO	S	DESCRIPTION	QTY	ID
		== REAR MOUNT PLATFORM - 713.016 07/13/16 ==	*1*	*KMEM*
		== LETTERING & STRIPING, 102' RM - 713.016 07/13/16 ==	*1*	*KMEM*
		== COMPARTMENT ACCESSORIES REARMOUNT AERIAL - 713.016 07/13/16 ==	*1*	*KMEM*
		== HD RM WITH PUMP GEN/ELEC AC - 713.016 07/13/16 ==	*1*	*KMEM*
		== MISC AND LOOSE EQUIPMENT (AERIAL) - 713.016 07/13/16 ==	*1*	*KMEM*
		== AERIAL WARRANTY PACKAGE W/PUMP - 713.016 07/13/16 ==	*1*	*KMEM*
		== SPECIAL, QUOTE OVERRIDE - 713.016 07/13/16 ==	*1*	*KMEM*
		DEALER ======= DEALER ======= DEALER	**1**	**DLR**
		QUOTE DATA VERSION: 0713.016 - 2016 DATA SET	**1**	**KMEM**
		INDEX OF PART NUMBERS	**1**	**KMEM**
		****** HEADER - CONTRACTS, PROPOSAL FORM, ETC @ FRONT OF SPECS**	**1**	**KMEM**
		****** PROPOSED - AERIAL SPEC BOILERPLATE**	**1**	**KMEM**
04-00-0000		PROPOSED - GENERAL INFORMATION - NFPA 1901	1	KMEM
04-00-0033		***PROPOSED - COMPLETION INFO***	***1***	***KMEM***
04-00-0040		***PROPOSED - FMVSS CERTIFICATION***	***1***	***KMEM***
04-00-0060		***PROPOSED - RECORDS***	***1***	***KMEM***
04-00-0075		***PROPOSED - TOP OF THE LINE CHASSIS MULTIPLEX***	***1***	***KMEM***
04-00-0107		***PROPOSED - GENERAL CONSTRUCTION - AERIAL***	***1***	***KMEM***
04-00-0120		***PROPOSED - SINGLE LINE RESPONSIBILITY***	***1***	***KMEM***
04-00-0130		***PROPOSED - PRODUCT LIABILITY - $30,000,000.00***	***1***	***KMEM***
04-00-0170		***PROPOSED - CRITERIA & CODE CONFORMANCE - AERIAL***	***1***	***KMEM***
04-00-0193		***PROPOSED - PAINT PERFORMANCE CERTIFICATION***	***1***	***KMEM***
04-00-0490		***PROPOSED - PRICES & PAYMENTS***	***1***	***KMEM***
04-00-0540		***PROPOSED - BOND REQUIREMENTS***	***1***	***KMEM***
04-00-0560		***PROPOSED - PERFORMANCE BOND***	***1***	***KMEM***
04-00-0630		***PROPOSED - MATERIAL & WORKMANSHIP***	***1***	***KMEM***
04-00-0660		***PROPOSED - CONTRACT SPECIALIST***	***1***	***KMEM***
04-00-0680		***PROPOSED - APPROVAL DRAWING***	***1***	***KMEM***
04-00-1200		***PROPOSED - DELIVERY***	***1***	***KMEM***
04-00-1215		PROPOSED - INSTRUCTION MANUALS, TWO (2) SETS - CD	1	KMEM
04-00-1215		***POWERPOINT DELIVERY - PROPOSAL FCAM AERIAL***	***1***	***DLR***
04-00-1215	***X***	***POWERPOINT DELIVERY - PROPOSAL FCAM AERIAL***	***1***	
04-00-1300		***PROPOSED - VEHICLE FLUIDS PLATE***	***1***	***KMEM***

PART NO	S	DESCRIPTION	QTY	ID
04-00-1500		***PROPOSED - MANUFACTURE GENERATED EXACT BLUEPRINT WITH BID***	***1***	***KMEM***
04-00-1521	***X***	***PROPOSED - KME and BULLDOG FAMA MEMBERSHIP***	***1***	
04-00-1540		***PROPOSED - MANUFACTURED IN THE UNITED STATES***	***1***	***KMEM***
04-00-1550		PROPOSED - ISO 9001 QUALITY MANAGEMENT SYSTEM	1	KMEM
04-00-2440		***PROPOSED - UNDERWRITERS LABORATORIES (UL) TESTING - AERIAL***	***1***	***KMEM***
04-00-2445	***X***	***PROPOSED - UNDERWRITERS LABORATORIES (UL) TESTING - FCAM***	***1***	
04-00-2455		***PROPOSED - UL LINE VOLTAGE TESTING***	***1***	***KMEM***
07-00-0015		"AERIAL FIRE APPARATUS" NFPA 2016 CHAPTERS OF COMPLIANCE	1	KMEM
08-00-0000		VEHICLE DATA PLATE DESCRIPTION	1	KMEM
14-00-0000		NFPA ROLLOVER STABILITY GENERAL STATEMENT	1	KMEM
15-00-0010	>	PROPOSED - PRINCIPAL APPARATUS DIMENSIONS & GVWR	1	KMEM
15-00-0050		***!!! CRITICAL OVERALL HEIGHT REQUIREMENT !!! - "NO"***	***1***	***KMEM***
15-00-0150		***!!! CRITICAL OVERALL LENGTH REQUIREMENT !!! - "NO"***	***1***	***KMEM***
AA-00-002A		***SERVICE CENTER - PROPOSAL FCAM***	***1***	***DLR***
BA-00-0115		<1> 102-RM-PL AERIALCAT PLATFORM	1	KMEM
BA-00-3000		SEAT AND SEAT BELT ANCHOR TESTING	1	KMEM
BA-02-0635		<2> RM PREDATOR - TANDEM AXLE- HD 102' RM	1	KMEM
BA-02-3125		<3> 138" TRAVEL HEIGHT - 102' RM	1	KMEM
BA-03-1660		<4> LO BODY, 102-RM-PL WITH PUMP	1	KMEM
BA-04-0575		AERIAL CHASSIS, REAR MOUNT PREDATOR -TANDEM AXLE (HEAVY)	1	KMEM
		****** HEADER - 100" PREDATOR CAB ******	**1**	**KMEM**
BA-04-0805		PREDATOR CAB - BASE, 100"	1	KMEM
BA-04-0850		PREDATOR CAB - BASE - ALUMINUM CONSTRUCTION	1	KMEM
BA-04-0990		PREDATOR 100" - CRASH TESTING	1	KMEM
BA-04-0995		PREDATOR 100" - 120,000# ROOF & SIDE TESTING	1	KMEM
BA-04-1300		PREDATOR 100" - MFD CAB LENGTH (DIM - 62 1/2")	1	KMEM
BA-04-1900		PREDATOR 100" - VISTA DIMENSIONS FRONT SEATING & ENGINE ENCLOSURE	1	KMEM
BA-04-4560		2010 - RM 10" RAISED w/13" ROOF NOTCH	1	KMEM
BA-04-4850		52" WIDE NOTCH AERIAL RAISED ROOF OPT	1	KMEM
BA-05-0260		***BATTERY ACCESS DOORS - REAR STEP WELLS, EACH SIDE***	***1***	***KMEM***
BA-05-0510		FULL LENGTH CAB DOORS - 100" PREDATOR "MFD, LFD & X-LFD"	1	KMEM
BA-05-0670		CAST ANTI-SLIP ENTRY STEPS FOR FULL LENGTH CAB DOORS	1	KMEM
BA-05-1010		PREDATOR DOOR LATCHES, HD LOOP STYLE LATCH - FULL LENGTH DOORS	1	KMEM
BA-05-1035		LOCKING CAB DOOR , OUT + IN, LOOP STYLE LATCH	1	KMEM
BA-05-1037		KEY MODEL #2001	1	KMEM
BA-05-1103		WINDOWS, MANUAL HAND CRANK STYLE - 100"	1	KMEM
BA-05-1130		DOOR WINDOW TRIM EXTRUSION, 4 - DOOR	1	KMEM
BA-05-1310		UPPER INTERIOR DOOR PANELS - ABS, 4-DOOR	1	KMEM
BA-05-1410		BRUSHED ALUMINUM DOOR SCUFF PLATES, 4 - DOOR	1	KMEM
BA-05-1520		***SCOTCHLITE CHEVRONS ON INTERIOR OF DOOR PANEL 4-DOORS***	***1***	***KMEM***
		****** HEADER - CAB EXTERIOR ACCESSORIES & OPT, 100" PREDATOR**	**1**	**KMEM**
BA-05-2410		WINDSHIELD, 100" PREDATOR CAB	1	KMEM
BA-05-2425		WINDSHIELD WIPERS & WASHERS - 100" PREDATOR	1	KMEM
BA-05-2450		SIDE VIEWING WINDOWS NON-SLIDING - PREDATOR	1	KMEM
BA-05-2500		DARK TINT WINDOWS, SIDE VIEWING, REAR DOORS & REAR WALL	1	KMEM
BA-05-2600		GRAB RAILS EXTERIOR, KNURLED ALUMINUM EXTRUSION	1	KMEM
BA-05-2668		PREDATOR INTERIOR GRAB HANDLES - WHEELABRATED	1	KMEM
BA-05-2715		FRONT CAB GRILLE - FORMED STAINESS STEEL MIRROR FINISHED - 100" PREDATOR	1	KMEM
BA-05-2780		FRONT CAB GRILLE SCREEN - BLACK MESH - 100" PREDATOR/PANTHER	1	KMEM
BA-05-2815		SIDE CAB GRILLES - SHAPED BRIGHT FINISHED - 100" PREDATOR	1	KMEM
BA-05-2900		ALUMINUM CAB WHEEL LINERS	1	KMEM
BA-05-2915		***STAINLESS STEEL CAB FENDERETTES***	***1***	***KMEM***
BA-05-3000		FRONT MUD FLAPS	1	KMEM
BA-05-3500		VELVAC MIRRORS " WEST COAST" HEATED / REMOTE - W/CONVEX SPOT	1	KMEM
BA-05-3690		MIRROR CONTROL IN MULTIPLEX CONTROL SCREEN	1	KMEM
BA-05-5115		INTERIOR TRIM, 100" PREDATOR	1	KMEM
BA-05-5180		CUSTOM CAB INTERIOR PAINT - TEXTURED GRAY	1	KMEM

PART NO	S	DESCRIPTION	QTY	ID
BA-05-5200		PREDATOR REAR INTERIOR CAB WALL, GRAY DURAWEAR UPHOLSTERY	1	KMEM
BA-05-5335		TREAD PLATE KICK PLATE ON LOWER INTERIOR REAR WALL	1	KMEM
BA-05-5530	>	STORAGE COMPARTMENTS UNDER FRONT SEATS - 100" PREDATOR	1	KMEM
BA-05-5550		***S4 PRETENTIONER MOUNT IN SEAT COMPARTMENT - DS***	***1***	***KMEM***
BA-05-5610		BARYFOL FLOORING	1	KMEM
BA-05-5650		1" ACOUSTICAL INSULATION	1	KMEM
BA-05-5824		ENGINE ENCLOSURE 100" PREDATOR FAB DASH (DURAWEAR)	1	KMEM
BA-05-5860		ENGINE ENCLOSURE MATERIAL - ALUMINUM CAB	1	KMEM
BA-05-7040		SUN VISORS, 100" PREDATOR CAB, PADDED VINYL	1	KMEM
BA-06-0500	>	TOP ROLLOVER PROTECTION SYSTEM W/SLAVE SENSOR - FIVE (5) OR MORE SEATS	1	KMEM
		****** HEADER - CAB SEATING & ACCESSORIES, 100" - PREDATOR MFD**	**1**	**KMEM**
		****** SEATING OPTIONS BOSTROM, 100" - PREDATOR - MFD - ROLLTEK**	**1**	**KMEM**
BA-06-3212	>	***DRIVERS SEAT, BOSTROM SIERRA AIR SUSPENSION, ABTS - SIDE CURTAIN AIRBAG***	***1***	***KMEM***
BA-06-3390		***DRIVERS SEAT, BOSTROM HEAVY DUTY AIR RIDE SUSPENSION***	***1***	***KMEM***
BA-06-3632		***OFFICERS SEAT, BOSTROM 450 SCBA, ABTS, FIXED - SIDE CURTAIN AIRBAG***	***1***	***KMEM***
BA-06-3930		***BOSTROM "SECUREALL" SCBA BOTTLE BRACKET - OFFICER'S SEAT***	***1***	***KMEM***
		MFD CAB - REAR FACING BOSTROM SEATS - ROLLTEK	**1**	**KMEM**
BA-06-4112		BOSTROM 450 SCBA ABTS REAR FACING, OUTBOARD, DS - SIDE CURTAIN AIRBAG	1	KMEM
BA-06-4195		***BOSTROM "SECUREALL" SCBA BOTTLE BRACKET - OUTBOARD, DS***	***1***	***KMEM***
BA-06-4212		BOSTROM 450 SCBA ABTS REAR FACING,OUTBOARD, OS - SIDE CURTAIN AIRBAG	1	KMEM
BA-06-4295		***BOSTROM "SECUREALL" SCBA BOTTLE BRACKET - OUTBOARD, OS***	***1***	***KMEM***
		MFD CAB - FORWARD FACING BOSTROM SEATS - ROLLTEK	**1**	**KMEM**
BA-06-5595		**** (2) FORWARD SEATS - UPGRADE SEAT RISER IF (4) ARE NEEDED ****	1	KMEM
BA-06-6210		***(2) - BOSTROM 450 SCBA ABTS FORWARD FACING, CENTER***	***1***	***KMEM***
BA-06-6260		***STANDARD SEAT, FORWARD FACING, (2) CENTER***	***1***	***KMEM***
BA-06-6325		***BOSTROM "SECUREALL" SCBA BOTTLE BRACKET - (2) CENTER FORWARD***	***1***	***KMEM***
BA-06-7100		CENTER OPEN COMPT. SEAT BASE - BOLT IN - MFD, XMFD	1	KMEM
BA-06-8005		BOSTROM SEATING MATERIAL, GRAY TWEED DURAWEAR	1	KMEM
BA-06-8055		NO SCBA PARADE COVERS SUPPLIED	1	KMEM
		****** HEADER - VEHICLE DATA RECORDER SYSTEMS**	**1**	**KMEM**
BA-06-9103	>	CLASS ONE SEAT BELT WARNING SYSTEM - UP TO 6 POSITIONS - ULTRAVIEW DISP	1	KMEM
BA-06-9125		SIX (6) SEATING POSITIONS (SELECT QTY)	1	KMEM
BA-06-9310		CLASS ONE VEHICLE DATA RECORDER - MULTIPLEX	1	KMEM
		****** HEADER - CAB INTERIOR ACCESSORIES & OPTIONS, 100" PREDATOR**	**1**	**KMEM**
BA-07-7010	>	***STANDARD #MATM RADIO ANTENNA INSTALLED***	***2***	***KMEM***
		****** HEADER - INSTRUMENTATION & CONTROLS, 100" PREDATOR - NARROW VISTA**	**1**	**KMEM**
BA-08-0214		DASH & CENTER CONSOLE - 100" PREDATOR FAB DASH (UPHOLSTERED)	1	KMEM
BA-08-0275		INSTRUMENT PANEL, 100" PREDATOR - NARROW	1	KMEM
BA-08-0300		INTER AXLE LOCK CONTROL SWITCH	1	KMEM
BA-08-0315		DIESEL EXHAUST FLUID LEVEL GAUGE	1	KMEM
BA-08-0320		ENGINE COMPRESSION BRAKE CONTROLS	1	KMEM
BA-08-0620		ULTRAVIEW 450 DISPLAY ON CAB DASH FOR ES-KEY SYSTEM	1	KMEM
BA-08-1220		INDICATOR CLUSTER, 100" PREDATOR	1	KMEM
BA-08-1225		"INTER AXLE LOCK" INDICATOR CLUSTER	1	KMEM
BA-08-1235		"ATC DISABLED" INDICATOR CLUSTER	1	KMEM
BA-08-1240		"ATC ACTIVE" INDICATOR CLUSTER	1	KMEM
BA-08-1265		"OUTRIGGERS NOT STOWED" INDICATOR ON DASH	1	KMEM
BA-08-1800		LOWER RIGHT AUXILIARY SWITCH PANEL - PREDATOR - FAB	1	KMEM
BA-08-1900		***PUMP SHIFT CONTROL ON LOWER LEFT DASH PANEL***	***1***	***KMEM***
BA-08-1950		MULTIPLEX CONTROL PUMP SHIFT SWITCH - MULTIPLEX	1	KMEM
BA-08-2000		AERIAL LADDER, LADDER POWER/PTO SWITCHES IN CAB	1	KMEM
BA-08-2750		PREDATOR COMPUTER TERMINAL IN FRONT OF OFFICER (FABRICATED)	1	KMEM

PART NO	S	DESCRIPTION	QTY	ID
BA-08-2905		OVERHEAD ABS PANEL, FLAT FACED, 100" PREDATOR	1	KMEM
BA-08-4415		RM HEATER/ DEFROSTER & ACCESS, PREDATOR NOTCH - 3" IN FRONT	1	KMEM
BA-08-6900		HVAC CONTROL SYSTEM - INCOPORATED INTO MULTIPLEX CONTROL DISPLAY	1	KMEM
BA-08-9000		CAB TILT SYSTEM & OPTIONS	1	KMEM
BA-08-9110		PARKING BRAKE/CAB TILT INTERLOCK	1	KMEM
		FRAME & AXLE PACKAGE, TANDEM AXLE CHASSIS (HEAVY)	**1**	**KMEM**
BA-09-5200		110,000 PSI FRAME: AERIAL CHASSIS TRIPLE FRAME	1	KMEM
		HEADER - FRONT BUMPER, EXTENSIONS & ACCESSORIES	**1**	**KMEM**
BA-10-0050	>	BUMPER 12" STAINLESS STEEL CONTOUR - ALL CABS	1	KMEM
BA-10-0110		10" FRONT BUMPER EXTENSION WITH TREAD PLATE GRAVEL SHIELD	1	KMEM
BA-10-0405		TREADPLATE GRAVEL SHIELD STANDARD INSTALLATION	1	KMEM
BA-10-2010		TWO (2) PAINTED TOW HOOKS BELOW FRONT BUMPER	1	KMEM
BA-10-5000		AERIAL TRAVEL SUPPORT FOR ANY REAR MOUNT TYPE AERIAL	1	KMEM
BA-14-0170		23,000# FRONT AXLE MERITOR MFS-20-133A-N	1	KMEM
BA-14-1110		MERITOR, EX-225 17" DISC BRAKES, FRONT AXLE, W/ AUTO SLACK ADJUSTMENT	1	KMEM
BA-14-2040		SUSPENSION FRONT - 23,000# AXLES	1	KMEM
BA-14-2095		**AERIAL DEVICE TRAVEL HEIGHT CRITICAL!!!! ** REQUIRES SMALL AXLE SPACER	1	KMEM
BA-14-2110		FRONT AXLE SHOCK ABSORBERS - MONROE "MAGNUM - 70"	1	KMEM
BA-15-1060		58,000# TANDEM REAR AXLE MERITOR RT-58-185	1	KMEM
BA-15-1510		16.5" X 7" S-CAM BRAKES - MERITOR REAR TANDEM W/AUTO SLACK ADJ.	1	KMEM
BA-15-2810		VEHICLE TOP SPEED - 2016 NFPA STATEMENT	1	KMEM
BA-15-4640	>	RIDEWELL "DYNALASTIC" 202S RUBBER BLOCK SUSPENSION, TANDEM AXLE 58,000#	1	KMEM
		****** HEADER - BRAKE SYSTEM, TANDEM AXLE VEHICLE**	**1**	**KMEM**
BA-20-1005		BRAKE SYSTEM, TA CHASSIS	1	KMEM
BA-20-1110		ABS BRAKING FOR TANDEM REAR AXLE CHASSIS	1	KMEM
BA-20-1275	>	ELECTRONIC STABILITY CONTROL (ESC) WITH (ATC) - CUSTOM TA	1	KMEM
BA-20-1530		AIR RESERVOIRS 7100 CU IN TA, BASE	1	KMEM
BA-20-1810		***STAINLESS STEEL AIR TANK BRACKETS - (4 TANKS)***	***1***	***KMEM***
BA-20-2025		1/4 TURN DRAIN VALVES ON ALL AIR TANKS	1	KMEM
BA-20-3000		AIR DRYER, HEATED - BENDIX AD-9 12VOLT	1	KMEM
BA-20-5005		COLOR CODED SYNFLEX BRAKE LINES W/QUICK RELEASE FITTINGS - TA	1	KMEM
BA-20-5500		AIR COMPRESSOR -WABCO 18.7 CFM- STD. FOR ALL CUMMINS ENGINES	1	KMEM
BA-20-5810		BRAKE TREADLE VALVE	1	KMEM
BA-20-6010		PARKING BRAKE CONTROL - NEAR DRIVER - ALL WHEEL LOCK	1	KMEM
BA-20-6500		***AUX. AIR INLET IN LH DOOR AREA (TO CHARGE VEHICLE AIR SYSTEM)***	***1***	***KMEM***
		HEADER, TIRE AND WHEEL OPTIONS	**1**	**KMEM**
		HEADER, WHEELS, 23,000 FRONT AXLE - ALUMINUM	**1**	**KMEM**
BA-25-1040		FRONT WHEELS, POLISHED ALUMINUM, 22.5 X 13, 24,390#	1	KMEM
BA-25-1045		FRONT WHEELS, LUG AND HUB TRIM (ALUMINUM WHEELS)	1	KMEM
BA-25-2030	>	FRONT, GOODYEAR 425/65R22.5 L 24,400# G296 MSA MIXED - 68MPH	1	KMEM
BA-25-2400		GOODYEAR - FIRE SERVICE RATING - TIRE RESTRICTIONS	1	KMEM
		HEADER, TIRES & WHEELS, 58,000 TANDEM REAR AXLE	**1**	**KMEM**
BA-25-5090		***REAR WHEELS, POLISHED ALUMINUM, 22.5 X 9, TA***	***1***	***KMEM***
BA-25-5115		***REAR WHEELS, LUG AND HUB TRIM, TA (ALUMINUM)***	***1***	***KMEM***
BA-25-7055	>	REAR, GDYR 315/80R22.5 J 64,000# RHD II+ TRACTION - 75MPH, TA	1	KMEM
BA-25-7400		GOODYEAR - FIRE SERVICE RATING - TIRE RESTRICTIONS	1	KMEM
BA-25-9905		TIRE PRESSURE MONITORING - LED VALVE STEM CAPS - TEN TIRES	1	KMEM
		100" PREDATOR - ENGINE PACKAGE, HEAVY TANDEM AXLE CHASSIS	**1**	**KMEM**
		****** 100" - HEADER, ENGINE & ENGINE COMPONENTS**	**1**	**KMEM**
BA-30-3200	>	CUMMINS ISX12 - 500 HP @ 1800 RPM TQ 1645 lb-ft @ 1100 - PREDATOR NARROW	1	KMEM
BA-30-9810		PROPOSED - ENGINE CERTIFICATION CUSTOM CHASSIS	1	KMEM
BA-32-0035		COOLING/RADIATOR, 100" PREDATOR - NARROW	1	KMEM
BA-32-0070		ENGINE COOLANT FILTER - CUMMINS ISC - ISX	1	KMEM
BA-32-0085		COOLING SYSTEM CRITERIA	1	KMEM
BA-32-0100		TRANSMISSION COOLER	1	KMEM

PART NO	S	DESCRIPTION	QTY	ID
BA-32-0120		RADIATOR SKID PLATE	1	KMEM
BA-32-0160		CHARGED AIR COOLER (FRONT MOUNT)	1	KMEM
BA-32-0245		COOLANT FAN, W/CLUTCH - CUMMINS ISX12	1	KMEM
BA-32-0340		HEATER AND COOLANT HOSES/PIPING	1	KMEM
BA-32-0420		LOW COOLANT INDICATOR LIGHT AND ALARM IN CAB	1	KMEM
BA-33-0020	>	SECONDARY BRAKING - ENGINE COMPRESSION BRAKE	1	KMEM
BA-33-0150		FAST IDLE CONTROL FOR ALL ELECTRONIC ENGINES - SMART WHEEL	1	KMEM
BA-33-0160		ENGINE AIR CLEANER	1	KMEM
BA-33-0180		SPARK ARRESTOR	1	KMEM
BA-33-0200		ACCELERATOR PEDAL - FLOOR MOUNT	1	KMEM
BA-33-0250		REMOTE THROTTLE & INTERLOCK HARNESS	1	KMEM
BA-40-0300		ALLISON 4000EVS TRANS. - COMPRESSION BRAKE	1	KMEM
BA-40-0660		FIVE (5) SPEED AUTOMATIC TRANSMISSION - 4000 SERIES	1	KMEM
BA-40-0700		ALLISON TRANSMISSIONS, ELECTRONIC TOUCH PAD SHIFTER IN CAB	1	KMEM
BA-40-0855		TRANSMISSION OIL LEVEL SENSOR	1	KMEM
BA-40-0860		ALLISON PARK TO NEUTRAL	1	KMEM
BA-40-0910		ALLISON PRESELECT PROGRAMMING	1	KMEM
BA-40-0920		PRESELECT PROGRAMMED FOR 4TH GEAR	1	KMEM
BA-40-4720		TES-389 TRANS FLUID 4000EVS TRANSMISSION	1	KMEM
BA-45-0110		DRIVE LINES DANA-SPICER #1810 SERIES	1	KMEM
BA-49-0100		DIESEL EXHAUST FLUID TANK - 5 GALLON	1	KMEM
BA-50-0110		***EXHAUST SYSTEM - DPF & SCR SYSTEM - INLINE SYSTEM***	***1***	***KMEM***
BA-50-0155		ALUMINIZED STEEL EXHAUST TAILPIPE/OUTLET OS - DPF + SCR SYSTEM	1	KMEM
BA-50-2500		FUEL SYSTEM	1	KMEM
BA-50-2510		FUEL TANK - 65 GALLON, STEEL	1	KMEM
BA-50-2600		***STAINLESS STEEL FUEL TANK STRAPS IN LIEU OF STEEL***	***1***	***KMEM***
BA-50-2625		FUEL LINES - FIBER REINFORCED HOSE	1	KMEM
BA-50-2637		***DUAL FUEL LINE SHUT-OFF VALVES***	***1***	***KMEM***
BA-50-2645	>	CUMMINS FUEL-WATER SEPARATOR	1	KMEM
BA-50-2670		FUEL PUMP SECONDARY ELECTRIC, REQ. ON 210" W-B OR LONGER	1	KMEM
BA-50-2700		FUEL POCKET, LEFT SIDE REAR WHEEL WELL PANEL	1	KMEM
BA-50-5050	***>***	***STEERING - DUAL SHEPPARD POWER STEERING GEARS***	***1***	***KMEM***
BA-50-7115		STEERING COLUMN - CLOCK SPRING "NARROW"	1	KMEM
BA-50-7155		18" STEERING WHEEL - 4 SPOKE - "NARROW"	1	KMEM
BA-50-7170		***SMART WHEEL CONTROLS ON STEERING WHEEL***	***1***	***KMEM***
BA-50-9000		ROAD SAFETY KITS	1	KMEM
		****** HEADER, RM PLATFORM CHASSIS ELECTRICAL, 100" PREDATOR (OPTIONS)**	**1**	**KMEM**
		****** HEADER, RM PLATFORM W/ PUMP BODY ELECTRICAL (OPTIONS)**	**1**	**KMEM**
BE-01-0005		PREDATOR CHASSIS ELECTRICAL SYSTEM DESCRIPTION	1	KMEM
BE-01-0105		PREDATOR CHASSIS WIRING INSTALLATION	1	KMEM
BE-01-0150		DIRECT BATTERY GROUNDING STRAP - PREDATOR	1	KMEM
BE-01-0153		EMI/RFI PROTECTION	1	KMEM
BE-01-0205		PREDATOR 12 VOLT ELECTRICAL SYSTEM TESTING	1	KMEM
BE-05-0353		CLASS-1 ES-KEY MULTI-PLEXED ELECTRICAL SYSTEM 100" PREDATOR	1	KMEM
BE-05-0450		CLASS-1 ES-KEY ULTRAVIEW 450 DISPLAY	1	KMEM
BE-05-0800		INTER-LOCK MODULE FOR MULTIPLEX SYSTEM	1	KMEM
BE-05-0900		CHASSIS DIAGNOSTICS SYSTEM	1	KMEM
BE-05-1160		VOLTAGE MONITORING SYSTEM - 12 VOLT	1	KMEM
BE-05-1165		INDICATOR LIGHT AND ALARM PROVE-OUT SYSTEM	1	KMEM
BE-05-1170		SEQUENCER	1	KMEM
BE-05-1175		ELECTRICAL HARNESS INSTALLATION - 12 VOLT	1	KMEM
BE-10-0487		DELCO REMY 40SI, 320 AMP BRUSHLESS ALTERNATOR	1	KMEM
BE-15-0730		***BATTERIES - SIX (6) EXIDE GROUP 31, 925CCA***	***1***	***KMEM***
BE-15-1105		PREDATOR BATTERY STORAGE, STEEL, MFD, XMFD, LFD, XLFD	1	KMEM
BE-15-1500		BATTERY DISCONNECT SWITCH, ALL UNITS	1	KMEM
BE-15-1555		COLE HERSEE BATTERY JUMPER STUDS, DS BATTERY BOX	1	KMEM
BE-20-1635		***120 VOLT 20 AMP SUPER AUTO EJECT FOR BATT CHARGER - CUSTOM***	***1***	***KMEM***
BE-20-1715		***SHORELINE RECEPTACLE LABEL - NFPA***	***1***	***KMEM***
BE-20-1720		***RED COVER FOR KUSSMAUL AUTO-EJECT RECEPTACLE, #091-55RD***	***1***	***KMEM***

PART NO	S	DESCRIPTION	QTY	ID
BE-20-1750		***SHORELINE LOCATION - ADJACENT TO DRIVER'S DOOR***	***1***	***KMEM***
BE-20-2020		***KUSSMAUL MODEL 1200, 40AMP W/ 120 VAC 125PSI AIR COMP.***	***1***	***KMEM***
BE-20-3220		***KUSSMAUL AUTO DRAIN ACHP - 120V***	***1***	***KMEM***
BE-30-0100		CONTROL SWITCHING - EATON MULTIPLEX SWITCHES - 12 ABOVE DRIVER	1	KMEM
BE-30-0120		CONTROL SWITCHING - EATON MULTIPLEX SWITCHES - 9 LOWER PANEL	1	KMEM
BE-30-2500		CONTROL SWITCHING LABELING	1	KMEM
BF-00-0515		***WELDON #8080-8000-13 WHITE/RED LED INTERIOR LIGHTS (4)***	***1***	***KMEM***
BF-00-5000		DOOR OPEN INDICATOR W/ INTEGRAL AUDIBLE ALARM	1	KMEM
		****** HEADER, 12V POWER/ USB CHARGING/ POWER - GROUND CIRCUITS, CUSTOM ******	**1**	**KMEM**
BF-01-1040	>	***12 VOLT POWER PORT LOCATED NEAR DRIVER***	***1***	***KMEM***
BF-01-1060	>	***12 VOLT POWER PORT LOCATED NEAR OFFICER***	***1***	***KMEM***
BF-01-3020	>	***ROUND USB CHARGING PORT LOCATED NEAR DRIVER***	***1***	***KMEM***
BF-01-3040	>	***ROUND USB CHARGING PORT LOCATED NEAR OFFICER***	***1***	***KMEM***
BF-01-6000		12 VOLT POWER AND GROUND CIRCUIT FOR ACCESSORIES IN DASH	1	KMEM
BF-01-6040		***12 VOLT POWER AND GROUND CIRCUIT W/ IGNITION, BEHIND OFFICERS SEAT***	***1***	***KMEM***
		****** HEADER, REAR/SIDE VISION CAMERA SYSTEMS ******	**1**	**KMEM**
BF-20-0040		***DUAL HEADLIGHTS, LED, PREDATOR - J.W. SPEAKER - DUAL BEZELS***	***1***	***KMEM***
BF-20-0320		***DAYTIME RUNNING LIGHTS, ALL CABS***	***1***	***KMEM***
BG-00-0055		***DUAL MODULE w/ CODE 3 65STA LED TURN SIGNAL & REQ WARN LIGHT***	***1***	***KMEM***
BG-00-0410		CUST RM PLATFORM CHASSIS LED MARKER LIGHTS	1	KMEM
BG-00-0510		CUST RM PLATFORM BODY LED MARKER LIGHTS	1	KMEM
BG-00-1250		WHELEN # LED MARKER LIGHTS @ TOP ROOF EDGE OF CAB RM PLAT	1	KMEM
BG-00-1300		STAINLESS STEEL MOUNTING PLATE FOR CENTER THREE MARKER LIGHTS - AERIAL NOTCH	1	KMEM
BG-00-1600		TRUCK-LITE MARKER LIGHTS @ EA SIDE OF CAB, ADJACENT TO DRIVER DOOR	1	KMEM
BG-00-1610		TRUCK-LITE MARKER/TURN LIGHTS @ EA SIDE OF BODY	1	KMEM
BG-00-1660		TRUCK-LITE MARKER LIGHTS @ REAR OF BODY	1	KMEM
BG-00-1800		TRUCK-LITE DOT AMBER REFLECTORS @ SIDE OF BODY	1	KMEM
BG-00-1810		TRUCK-LITE DOT RED REFLECTORS @ REAR OF BODY	1	KMEM
BG-00-2915		TECNIQ #L10 LED LICENSE PLATE LIGHT @ DS REAR OF BODY	1	KMEM
BG-00-3110		***BRITAX, 6" ANGLED RUBBER LED LIGHT @ REAR BODY CORNERS***	***1***	***KMEM***
BG-02-2520		***CODE 3, #65 LED BRAKE, REVERSE, & TURN***	***1***	***KMEM***
BH-04-1050		CAB STEP LIGHTS, TECNIQ EON 3 LED, ALL DEVICES	4	KMEM
BH-04-1130		BODY STEP LIGHTS, TECNIQ EON 3 LED, ALL DEVICES	4	KMEM
BH-05-1625		DUNNAGE AREA LIGHTING, TECNIQ EON 3 LED	1	KMEM
BH-05-2300		AERIAL ACCESS LADDER ILLUMINATION - WHELEN 3" LED - RM BODY	1	KMEM
	>	****** HEADER, HOSE BED LIGHTING ******	**1**	**KMEM**
BH-06-0200		***UNITY LED HOSE BED LIGHTS, ALL DEVICES***	***1***	***KMEM***
BH-06-2200		***HOSE BED WORK LIGHT - SWITCH***	***1***	***KMEM***
		****** HEADER, SCENE LIGHTS - CUSTOM CHASSIS ******	**1**	**KMEM**
		****** HEADER, SCENE LIGHTS - LADDER/PLATFORM W/ PUMP**	**1**	**KMEM**
BH-10-7000		***FRC SPECTRA 900 LED SCENE LIGHTS BEHIND FRONT CAB DOORS***	***1***	***KMEM***
BH-10-8000		***CONTROL SWITCHES IN CAB FOR BEHIND FRONT CAB DOOR LIGHTS***	***1***	***KMEM***
BH-11-0810		***NFPA (4) AMDOR H2O LED GROUND LIGHTS, BELOW CAB DOORS***	***1***	***KMEM***
BH-11-0840		***GROUND LIGHTS, 2 LED BELOW PUMP PANEL RUNNING BOARD - H2O***	***1***	***KMEM***
BH-11-0860		***GROUND LIGHTS, 2 LED BELOW FRONT BODY CORNERS - H2O***	***1***	***KMEM***
BH-11-0870		***GROUND LIGHTS, 2 LED AT REAR BODY CORNERS - H2O***	***1***	***KMEM***
BI-00-0200		AERIAL BODY ELECTRICAL SYSTEM	1	KMEM
BI-00-0205		AERIAL BODY ELECTRICAL JUNCTION COMPARTMENT	1	KMEM
BI-00-0210		REAR-MOUNT, AERIAL DEVICE ELECTRICAL JUNCTION COMPARTMENT	1	KMEM
BI-00-0525		BODY ELECTRICAL HARNESS - ES-KEY	1	KMEM
BJ-00-5115		PUMP ENCLOSURE WORK LIGHTS - TECNIQ LED	1	KMEM
BJ-00-5165		ENGINE COMPARTMENT WORK LIGHTS - TECNIQ LED	1	KMEM
		COMPARTMENT LIGHTS - REAR MOUNT TANDEM AXLE	**1**	**KMEM**
BJ-02-0450	>	***COMPT. LIGHTS, AMDOR LUMA BAR LED LIGHTING - DUAL***	***16***	***KMEM***
		****** HEADER, 12V BODY FLOOD LIGHTING - RM LAD/PLAT/WT W/ PUMP ******	**1**	**KMEM**
BL-08-0522		***(2) 12 VOLT EVOLUTION II LED V20 TELESCOPING W/POLES - FRONT OF BODY***	***1***	***KMEM***

PART NO	S	DESCRIPTION	QTY	ID
BL-15-7020		***CONTROL SWITCHES IN CAB FOR FRONT OF BODY LIGHTS***	***1***	***KMEM***
BL-15-7025		***CONTROL SWITCHES ON PUMP PANEL FOR FRONT OF BODY LIGHTS***	***1***	***KMEM***
BL-15-9020		***WIRE UPGRADE FOR 12V HIGH AMP LIGHTS - FRONT OF BODY***	***1***	***KMEM***
		****** CUSTOM REAR MOUNT AERIAL NFPA WARNING LIGHT PACKAGE**	**1**	**KMEM**
BL-95-0000		NFPA COMPLIANT WARNING LIGHT PACKAGE - ALL UNITS	1	KMEM
BL-95-0100		LIGHT PACKAGE ACTUATION/CONTROLS - ALL UNITS	1	KMEM
BL-98-0000		WARNING LIGHT FLASH PATTERN - NFPA FLASH PATTERN	1	KMEM
BM-00-0200		CODE 3 UPPER PACKAGE - CUSTOM REAR MOUNT AERIAL	1	KMEM
BM-02-0072		A-UPPER, CODE 3 LED 2718NFPA1, RX 2700 18" PRIZM II BAR PAIR	1	KMEM
BM-02-1055		***C-UPPER, CODE 3 ARCH LED BEACONS - 180° SOLID COLOR***	***1***	***KMEM***
BM-02-2000		B/D-UPPER REAR, COVERED BY LIGHTS IN ZONE C-UPPER	1	KMEM
BM-02-3000		B/D-UPPER FRONT, COVERED BY LIGHTS IN ZONE A-UPPER	1	KMEM
BM-07-0200		CODE 3 LOWER PACKAGE - CUSTOM REAR MOUNT AERIAL	1	KMEM
BM-09-0018	>	A-LOWER FRONT, CODE 3 65 SERIES LED	1	KMEM
BM-09-0098		A-LOWER FRONT MOUNTING, CUSTOM CHASSIS	1	KMEM
BM-09-1014	>	C-LOWER REAR, CODE 3 65 SERIES LED	1	KMEM
BM-09-2006	>	B/D-LOWER FRONT, CODE 3 65 SERIES LED	1	KMEM
BM-09-2098		B/D-LOWER FRONT MOUNTING, CUSTOM CHASSIS	1	KMEM
BM-09-3006	>	B/D-LOWER MID, CODE 3 65 SERIES LED	1	KMEM
BM-09-3506	>	B/D-LOWER SECONDARY MID, CODE 3 65 SERIES LED	1	KMEM
BM-09-4006	>	B/D-LOWER REAR, CODE 3 65 SERIES LED	1	KMEM
BM-15-0000		LIGHT PACKAGE NFPA CERTIFICATION - ALL UNITS	1	KMEM
		****** HEADER, OPTIONAL WARNING LIGHTS**	**1**	**KMEM**
BM-21-0230		***TWO (2) CODE 3 RX2700 18" LED MINI LIGHT BARS, SIDE FACING***	***1***	***KMEM***
		****** HEADER, AUDIBLE WARNING & COMMUNICATION EQUIPMENT**	**1**	**KMEM**
BW-00-0510		CHASSIS SINGLE ELECTRIC (DOT) HORN	1	KMEM
BW-00-0560		CODE 3, #CA278, BACK-UP ALARM - 87DBA	1	KMEM
BW-00-5000	>	DUAL CHROME AIR HORNS	1	KMEM
BW-00-5100		DUAL AIR HORNS RECESSED IN FRONT BUMPER, STD	1	KMEM
BW-00-5200		AIR HORN CTRL - FOOT FOR OFFICER & STEERING WHEEL FOR DRIVER	1	KMEM
BW-01-0120		SIREN, WHELEN # 295HFS2, 100W - FLUSH MOUNT	1	KMEM
BW-01-1020		ONE (1) WHELEN SA315P SPEAKER	1	KMEM
BW-02-0000	***>***	***FEDERAL Q2B SIREN @ CAB FRONT***	***1***	***KMEM***
BW-02-0030		***Q2B MOUNT - SEMI-RECESSED INTO DRIVER'S SIDE OF BUMPER***	***1***	***KMEM***
BW-02-2020		***SIREN CONTROL - STEERING WHEEL & OFFICER SIDE FLOOR***	***1***	***KMEM***
		****** HEADER, PUMP, TANK & ACC, 102' PLAT 3-SECT, RM, LO**	**1**	**KMEM**
DC-00-2390		***WATEROUS S100, 2000 GPM SINGLE STAGE PUMP***	***1***	***KMEM***
DC-01-4630		***WATEROUS S100 MECHANICAL PUMP SEAL***	***1***	***KMEM***
DC-01-6210		***WATEROUS "C20" PUMP DRIVE UNIT, ALL WATEROUS MID-SHIP PUMPS***	***1***	***KMEM***
DC-01-6490		***PUMP RATIO (HALE, WATEROUS OR DARLEY)***	***1***	***KMEM***
DC-01-7140		***WATEROUS AIR SHIFT***	***1***	***KMEM***
DC-01-8590		***PUMP SHIFT MANUAL OVERRIDE (HALE, WATEROUS OR DARLEY)***	***1***	***KMEM***
DC-01-8615		***WATEROUS PUMP SHIFT INDICATOR LIGHTS***	***1***	***KMEM***
DC-01-9020		***TRANSMISSION LOCK-UP (HALE, WATEROUS OR DARLEY)***	***1***	***KMEM***
DC-02-1900		***PUMP MOUNTS - MID-SHIP PUMPS***	***1***	***KMEM***
DC-02-1990		PUMP INSTALLATION - CUSTOM	1	KMEM
DC-04-0120		***MANIFOLD - DISCHARGE & SUCTION FOR 1250-2000 GPM INTERFACE PUMPING SYSTEM***	***1***	***KMEM***
		******* HEADER, WATEROUS S100, PRESSURE CONTROL - PUMPER***	***1***	***KMEM***
DC-05-1226		***FIRE RESEARCH "IN CONTROL" TGA-400 PRESSURE GOVERNOR***	***1***	***KMEM***
DC-05-1295		***TASK FORCE TIPS #A18 SERIES INTAKE RELIEF VALVE***	***1***	***KMEM***
DC-05-2500		***PUMP UL CERTIFICATION - 750 GPM & UP***	***1***	***KMEM***
		WATEROUS, PUMP PRIMING PUMP AND CONTROLS	***1***	***KMEM***
DC-05-3680	***>***	***TRIDENT "MANUAL" AIR PRIMING SYSTEM***	***1***	***KMEM***
		WATEROUS, DRAINS & ACCESSORES	***1***	***KMEM***
DC-05-5110		***ROTARY MASTER DRAIN VALVE***	***1***	***KMEM***
DC-05-5400		***DRAINS/BLEEDER "INNOVATIVE CONTROLS" LIFT UP @ ALL 1-1/2" OR LARGER***	***1***	***KMEM***
DC-05-5500		***SYNFLEX SUCTION, DISCHARGE, PRESSURE AND CONTROL LINES***	***1***	***KMEM***
DC-05-6220		***WATEROUS ANODE BLOCKS - 2 TOTAL***	***1***	***KMEM***

PART NO	S	DESCRIPTION	QTY	ID
DC-10-2004		SIDE MOUNT PUMP MODULE, HD, RM AERIAL	1	KMEM
DC-10-2500		PUMP MODULE - STEEL CONSTRUCTION	1	KMEM
		****** HEADER, SUCTIONS - REARMOUNT TA-HD, SIDE MOUNT**	**1**	**KMEM**
DC-14-3350		***WATEROUS MAIN SUCTION INLETS 6" NST, 2000 GPM S100 PUMP***	***1***	***KMEM***
DC-14-5300		***SHORT NECK MAIN PUMP SUCTION INLETS - DS & OS***	***1***	***KMEM***
DC-14-5560		***> 6" NST MAIN PUMP SUCTION PRESSURE VENTED CAPS (2)***	***1***	***KMEM***
		HEADER - AUXILIARY SUCTION/S - AERIALS	**1**	**KMEM**
DC-20-1000		2 1/2" AUX. SIDE SUCTION @ DS PANEL TO REAR OF MAIN INLET	1	KMEM
DC-20-1100		2 1/2" AKRON #8800 S.S. BALL VALVE, DS REAR AUX SUCTION	1	KMEM
DC-20-1200		SWING CONTROL @ VALVE, DS REAR AUX SUCTION	1	KMEM
DC-20-9500		BEHIND PANEL MOUNT	1	KMEM
		****** HEADER - TANK TO PUMP - HD REARMOUNTS**	**1**	**KMEM**
DC-25-1200		TANK TO PUMP - 3" VALVE - LADDERS & PLATFORMS	1	KMEM
DC-25-3110		3" AKRON #8800 SERIES - S.S. BALL, VALVE , TANK TO PUMP	1	KMEM
DC-25-5110		3" PUSH/PULL CONTROL FOR TANK TO PUMP	1	KMEM
		****** HEADER - TANK FILL - HD REARMOUNT**	**1**	**KMEM**
DC-30-2100		TANK FILL LINE 2" FROM PUMP - SIDE MOUNT	1	KMEM
DC-30-2300		2" AKRON #8800 SERIES - S.S. BALL TANK FILL, SIDE MOUN	1	KMEM
DC-30-6500		PUSH/PULL CONTROL FOR TANK FILL	1	KMEM
		****** DISCHARGES & ACCESSORIES, RM-TA-HD AERIAL - SIDE MOUNT**	**1**	**KMEM**
		DRIVER'S SIDE #1 MAIN DISCHARGE	**1**	**KMEM**
DC-35-0010		DS MAIN DISCHARGE #1 - SIDE MOUNT	1	KMEM
DC-35-0110		2 1/2" AKRON #8800 SERIES - S.S. BALL, DS #1, SIDE MOUNT	1	KMEM
DC-35-1815		DS #1 DISCH - 2 1/2" STRAIGHT NST & 30-DEGREE NST ELBOW	1	KMEM
DC-35-2010		2 1/2" NST PRESSURE VENTED CAP - DS DISCHARGE #1	1	KMEM
DC-35-2410		PUSH/PULL CONTROL FOR DS DISCHARGE #1 -SIDE MOUNT	1	KMEM
DC-35-3110		INNOVATIVE CONTROLS LIQUID FILLED 2 1/2" PRESS GAUGE SS- DS DISCHARGE #1	1	KMEM
		DRIVER'S SIDE #2 MAIN DISCHARGE	**1**	**KMEM**
DC-35-5010		DS MAIN DISCHARGE #2 - SIDE MOUNT	1	KMEM
DC-35-5110		2 1/2" AKRON #8800 SERIES - S.S. BALL, DS #2, SIDE MOUNT	1	KMEM
DC-35-6815		DS #2 DISCH - 2 1/2" STRAIGHT NST & 30-DEGREE NST ELBOW	1	KMEM
DC-35-7010		2 1/2" NST PRESSURE VENTED CAP - DS DISCHARGE #2	1	KMEM
DC-35-7410		PUSH/PULL CONTROL FOR DS DISCHARGE #2 -SIDE MOUNT	1	KMEM
DC-35-8110		INNOVATIVE CONTROLS LIQUID FILLED 2 1/2" PRESS GAUGE SS- DS DISCHARGE #2	1	KMEM
		OFFICER'S SIDE #1 MAIN DISCHARGE	**1**	**KMEM**
DC-39-0010	>	OS MAIN DISCHARGE #1 - SIDE MOUNT	1	KMEM
DC-39-0110		2 1/2" AKRON #8800 SERIES - S.S. BALL, OS #1, SIDE MOUNT	1	KMEM
DC-39-1815		OS #1 DISCH - 2 1/2" STRAIGHT NST & 30-DEGREE NST ELBOW	1	KMEM
DC-39-2010		2 1/2" NST PRESSURE VENTED CAP - OS DISCHARGE #1	1	KMEM
DC-39-2410		PUSH/PULL CONTROL FOR OS DISCHARGE #1 -SIDE MOUNT	1	KMEM
DC-39-3110		INNOVATIVE CONTROLS LIQUID FILLED 2 1/2" PRESS GAUGE SS- OS DISCHARGE #1	1	KMEM
		OFFICER'S SIDE #2 MAIN DISCHARGE	**1**	**KMEM**
DC-39-5010	>	OS MAIN DISCHARGE #2 - SIDE MOUNT	1	KMEM
DC-39-5130		***> 4" AKRON #8840 VALVE, OS #2, SIDE MOUNT***	***1***	***KMEM***
DC-39-6865		***> OS #2 DISCH - 4" STRAIGHT NST***	***1***	***KMEM***
DC-39-7045		***DELETE 4" NST CAP - OS DISCHARGE #2***	***1***	***KMEM***
DC-39-7315		***4" NSTF X 4" STORZ KOCHEK SKE-R 30° ADAPTER WITH CAP OS***	***1***	***KMEM***
DC-39-7810		***> AKRON HANDWHEEL GEAR VALVE CONTROL, OS DISCHARGE #2***	***1***	***KMEM***
DC-39-8110		***INNOVATIVE CONTROLS LIQUID FILLED 2 1/2" PRESS GAUGE SS- OS DISCHARGE #2***	***1***	***KMEM***
		CROSSLAY #1 DISCHARGE	**1**	**KMEM**
DC-47-0400		CROSSLAY #1, 1 1/2" - AERIAL	1	KMEM
DC-47-1110		CROSSLAY #1 CAPACITY - 200' OF 1 3/4" HOSE	1	KMEM
DC-47-1410		CROSSLAY #1 - DOUBLE STACK HOSE DESIGN	1	KMEM
DC-47-1510		1 1/2" NST CHICKSAN SWIVEL - CROSSLAY #1	1	KMEM
DC-47-2110		CROSSLAY #1, PLUMBING, 2" STAINLESS STEEL PIPING	1	KMEM
DC-47-2210		2" AKRON #8800 SERIES - S.S. BALL, VALVE CROSSLAY #1, DISCH	1	KMEM

PART NO	S	DESCRIPTION	QTY	ID
DC-47-2610		PUSH/PULL 1/4 TURN CONTROL CROSSLAY #1	1	KMEM
DC-47-3210		INNOVATIVE CONTROLS LIQUID FILLED 2 1/2" PRESS GAUGE SS - CROSSLAY #1	1	KMEM
		CROSSLAY #2 DISCHARGE	***1***	***KMEM***
DC-47-5405		***CROSSLAY #2, 2 1/2" - AERIAL***	***1***	***KMEM***
DC-47-6140		***CROSSLAY #2 CAPACITY - 200' OF 2 1/2" HOSE***	***1***	***KMEM***
DC-47-6410		***CROSSLAY #2 - DOUBLE STACK HOSE DESIGN***	***1***	***KMEM***
DC-47-6520		***2 1/2" NST CHICKSAN SWIVEL - CROSSLAY #2***	***1***	***KMEM***
DC-47-7125		***CROSSLAY #2, PLUMBING, 2 1/2" STAINLESS STEEL PIPING***	***1***	***KMEM***
DC-47-7220		***2 1/2" AKRON #8800 SERIES - S.S. BALL, VALVE CROSSLAY***	***1***	***KMEM***
DC-47-7610		***PUSH/PULL 1/4 TURN CONTROL CROSSLAY #2***	***1***	***KMEM***
DC-47-8210		***INNOVATIVE CONTROLS LIQUID FILLED 2 1/2" PRESS GAUGE SS - CROSSLAY #2***	***1***	***KMEM***
		CROSSLAY & SPEEDLAY OPTIONS - RM AERIAL	**1**	**KMEM**
DC-50-7015	>	VINYL CROSS LAY COVER	1	KMEM
DC-50-7030		CROSSLAY COVER RED IN COLOR	1	KMEM
	>	**WATERWAY DISCHARGE**	**1**	**KMEM**
DC-62-0220		AERIAL WATERWAY DISCHARGE - TA-HD AERIAL	1	KMEM
DC-62-1145		WATERWAY DISCHARGE, PLUMBING, 5" STAINLESS STEEL - RM	1	KMEM
DC-62-1240		4" AKRON #8840 SERIES VALVE, WATERWAY	1	KMEM
DC-62-1950	>	***AKRON HANDWHEEL GEAR VALVE CONTROL, WATERWAY***	***1***	***KMEM***
DC-62-2210		***INNOVATIVE CONTROLS LIQUID FILLED 2 1/2" PRESS GAUGE SS - WATERWAY***	***1***	***KMEM***
		PUMP PANELS & ACCESSORIES	**1**	**KMEM**
DD-65-0505		SIDE MOUNT PUMP PANEL - RM AERIAL	1	KMEM
DD-65-4115		***SIDE MOUNT PANELS - 12 GAUGE BRUSHED STAINLESS STEEL***	***1***	***KMEM***
DD-65-4710		VERTICALLY HINGED GAUGE PANEL - SIDE MOUNT	1	KMEM
DD-65-4810		OFFICER SIDE VERTICALLY HINGED PUMP ACCESS DOOR - SIDE MOUNT	1	KMEM
DD-65-5150		PANEL FASTENERS	1	KMEM
DD-65-5510		CAPS AND ADAPTERS SAFETY TETHER - BALL CHAIN	1	KMEM
DD-65-8820		PUMP PANEL DISCH./SUCTION TRIM PLATES, HIGH POLISHED	1	KMEM
DD-65-9000		DISCHARGE GAUGE TRIM BEZELS	1	KMEM
DD-65-9110		***IDENTIFICATION PLATES***	***1***	***KMEM***
DD-66-0100		PUMP OPERATOR'S PANEL LIGHT SHIELD	1	KMEM
DD-66-0110		***AMDOR LUMA BAR H2O SUPER BRIGHT LED - LIGHT SHIELD***	***1***	***KMEM***
DD-66-2200		***OS PUMP PANEL LIGHT SHIELD***	***1***	***KMEM***
DD-66-2210		***AMDOR LUMA BAR H2O SUPER BRIGHT LED - LIGHT SHIELD***	***1***	***KMEM***
		PUMP OPERATOR'S PANEL - SIDE MOUNT, AERIAL	**1**	**KMEM**
DD-70-2150		***AIR HORN CONTROL BUTTON ON PUMP PANEL***	***1***	***KMEM***
DD-70-2335		***FIRE RESEARCH "IN CONTROL" PRESSURE GOVERNOR CONTROL @ PANEL***	***1***	***KMEM***
DD-70-2410		PUMP PRESSURE & VACUUM TEST PORTS @ PANEL	1	KMEM
DD-70-4120		MASTER PRESSURE & COMPOUND GAUGES - 4" NOMINAL GAUGES	1	KMEM
DD-70-4130		******* CONSIDER DELETING MASTER GAUGES - IN GOVERNOR DISPLAY *******	***1***	***KMEM***
DD-70-4220		4" INNOVATIVE CONTROLS MASTER PRESSURE AND COMPOUND GAUGES	1	KMEM
DD-70-4680		***PRESSURE & COMPOUND GAUGE RANGES - SINGLE STAGE***	***1***	***KMEM***
DD-70-4900		AUXILIARY ENGINE COOLER	1	KMEM
		WATER TANK LEVEL GAUGE - AERIAL	**1**	**KMEM**
DD-72-0410		FIRE RES - TANK VISION #WLA300-A00 LED WATER TANK GAUGE - PRIMARY	1	KMEM
DD-72-1300	>	FIRE RES WATER LEVEL - 1/4" NPT PRESS TRANS @ BOTTOM TANK	1	KMEM
DD-80-0110		SLIDE-OUT STEP @ DRIVER'S PUMP OPERATOR'S PANEL	1	KMEM
DE-00-1050	>	**** HEADER, 95' & 102' REAR MOUNT PLATFORM, WATER TANK	1	KMEM
		WATER TANKS/OPTIONS AERIALS	**1**	**KMEM**
DE-05-1700	>	***UPF POLYIIE TANK, 300 GAL. - AERIAL***	***1***	***KMEM***
DE-05-6000		***TANK DESCRIPT, CONSTR AND MOUNT, UPF POLY IIE TANK***	***1***	***KMEM***
JA-00-0100		BODY AND COMPARTMENT HEADER (ALL AERIAL DEVICES)	1	KMEM
JA-00-5030		GEN. 3/16" ALUM BODY DESCRIPT REAR MNT. PLATFORMS, HEAVY DUTY	1	KMEM
TF-04-1020		COMPARTMENTATION, -8" SHIFT STYLE #1H-LO	1	KMEM
		****** HEADER, HD-RM BODY OPTIONS (WITH PUMP)**	**1**	**KMEM**

PART NO	S	DESCRIPTION	QTY	ID
TF-10-0100		BEVELED OVERLAPPING DOORS, ALL COMPARTMENTS, ALL DEVICES	1	KMEM
TF-10-1900		BRUSHED FINISHED DOOR PANS - 2" THICK DOORS	1	KMEM
TF-10-2700		DOOR HINGE FOR BEVELED OVERLAPPING HINGED DOORS	1	KMEM
TF-10-2800		DOOR SEAL FOR BEVELED OVERLAPPING HINGED DOORS	1	KMEM
TF-10-2940		ROTARY LATCHES WITH D-RING HANDLES	1	KMEM
TF-10-3150		GAS SHOCK ON HORIZONTALLY & VERTICALLY HINGED DOORS	1	KMEM
TF-10-3320	***>***	***PULL STRAPS FOR HORIZONTALLY HINGED, LIFT UP DOORS***	***1***	***KMEM***
TF-10-6000		COMPARTMENT FLOORS (AERIALS ONLY)	1	KMEM
TF-11-0500		COMPARTMENT GENERAL DESCRIPTION, ALL LADDERS & PLATFORMS	1	KMEM
TF-11-1441		PAINTED REAR BODY PANEL, RM	1	KMEM
TF-11-2285		***1/2 WIDTH S. S. OUTRIGGER COVER PANELS, FOUR RIGGER DEVICES***	***1***	***KMEM***
TF-11-3045		BODY RUB RAILS, C-CHANNEL	1	KMEM
TF-12-1000		RUNNING BOARD STEPS (AERIALS ONLY)	1	KMEM
TF-13-3005		REAR TURNTABLE ACCESS "A" FRAME LADDER FRAMEWORK -8 & -4	1	KMEM
TF-13-3105		REAR MOUNT, TURNTABLE A-FRAME LADDER STEPS (HD)	1	KMEM
TF-13-5000		REAR-MOUNTS, BODY HANDRAILS, EXTRUDED ALUMINUM, A-FRAME BODY	1	KMEM
TF-14-1000		ALUMINUM WHEEL WELL LINERS	1	KMEM
TF-14-1710		POLISHED ALUMINUM FENDERETTES, TANDEM AXLE BODIES	1	KMEM
		AERIAL TA - FENDER OPTIONS	***1***	***KMEM***
TF-14-4005		***THREE (3) CYLINDER SLOTS, DRIVER FRONT FENDER***	***1***	***KMEM***
TF-14-4015		***THREE (3) CYLINDER SLOTS, OFFICER FRONT FENDER***	***1***	***KMEM***
TF-14-4020		***THREE (3) CYLINDER SLOTS, OFFICER REAR FENDER***	***1***	***KMEM***
TF-14-4025	***>***	***TWO (2) CYLINDER SLOTS, DRIVER REAR FENDER***	***1***	***KMEM***
TF-14-5000		REAR MUD FLAPS	1	KMEM
TF-14-6700		PAINTED REAR TOW EYES, BELOW BODY - REARMOUNT AERIALS	1	KMEM
TF-15-1050		HOSE BED, REAR MOUNT AERIALS, -4 & -8 SHIFT BODIES	1	KMEM
TF-15-1900		ALUMINUM HOSE BED FLOORING - AERIAL	1	KMEM
TF-15-2000	>	HOSE CHUTE, RIGHT SIDE TURNTABLE COMPARTMENTS	1	KMEM
TF-15-3110		HOSE BED COVER, VINYL WITH QTR TURNS	1	KMEM
TF-15-3190		HYPALON MATERIAL RED IN COLOR	1	KMEM
		****** HEADER, COMPARTMENT ACCESSORIES - REARMOUNTS**	**1**	**KMEM**
TJ-05-1000		***ADJUSTABLE SHELF DESCRIPTION - REARMOUNT***	***1***	***KMEM***
TJ-05-2000	***>***	***(AUTO QTY) ADJUSTABLE SHELF(S), MOUNTED AS DIRECTED***	***10***	***KMEM***
TJ-15-4000		***500#, FLOOR MOUNTED, ROLLOUT TRAY DESC. 100% - REARMOUNT***	***1***	***KMEM***
TJ-16-2000	***>***	***(AUTO QTY) ROLLOUT TRAY(S), MOUNTED AS DIRECTED - 100%***	***4***	***KMEM***
TJ-25-1000		***ROLLOUT / DROP DOWN ADJUSTABLE TRAY - REARMOUNT***	***1***	***KMEM***
TJ-25-2000	***>***	***(AUTO QTY) ROLLOUT DROP DOWN TRAY(S), MOUNTED AS DIRECTED***	***4***	***KMEM***
		****** HEADER, HD RM WITH PUMP 120/240 VOLT AC ELEC & GEN**	**1**	**KMEM**
TL-03-0000		120/240 VOLT ELECTRICAL SYSTEM TESTING	1	KMEM
TL-05-2310		***SMART POWER PTO/HYD GEN, ER-8 SERIES, 8000 WATT***	***1***	***KMEM***
TL-05-2900		***SMART POWER HOT SHIFT PTO***	***1***	***KMEM***
TL-05-7105		***WARRANTY - SMART POWER ER 6-8-10 PTO/HYD GENERATORS***	***1***	***KMEM***
TL-08-9990		***UL LINE VOLTAGE TESTING***	***1***	***KMEM***
TL-09-1025	***>***	***GEN LOCATION OFFICER SIDE ABOVE PUMP ENCLOSURE -HD-RM W/PUM***	***1***	***KMEM***
TL-10-1100	***>***	***TWELVE (12) SPACE, 125 AMP MAIN LUG LOAD CENTER***	***1***	***KMEM***
TL-10-2045		***TEN (10) STANDARD BREAKERS***	***1***	***KMEM***
TL-10-5040	***>***	***LOCATE BREAKER PANEL DRIVER SIDE FRONT COMPARTMENT***	***1***	***KMEM***
TL-15-1000		120 & 240 VOLT WIRING METHODS	1	KMEM
		******* HEADER, CORD REELS***	***1***	***KMEM***
TL-20-1310		***TWO (2) HANNAY #ECR-1618-17-18, 120 VOLT ELECTRIC CORD REEL***	***1***	***KMEM***
TL-20-2120		***CORD REEL LOCATION DS & OS FRONT COMPARTMENT***	***1***	***KMEM***
TL-20-2400		***CIRCUIT BREAKER REQUIREMENTS FOR CORD REELS***	***1***	***KMEM***
TL-20-2455		***REWIND SWITCH - ON COMPARTMENT WALL***	***1***	***KMEM***
TL-20-2510	***>***	***STAINLESS STEEL, 4 WAY ROLLER ASSEMBLY***	***1***	***KMEM***
TL-20-2550		***BALL STOP ON END OF CABLE***	***1***	***KMEM***
TL-20-2755		***200' OF 10/3 YELLOW CABLE FOR TWO (2) 120 VOLT REELS***	***1***	***KMEM***
TL-20-4620	***>***	***AKRON (15 TWIST) ELECTRICAL JUNCTION BOX ON END OF CABLE***	***2***	***KMEM***
TL-20-8200	***>***	***ALUMINUM TREAD PLATE JUNCTION BOX HOLDER, PER EACH***	***2***	***KMEM***
		******* HEADER, 120/240V FLOOD LIGHTS HD RM WITH PUMP***	***1***	***KMEM***
		******* PORTABLE LIGHTS, DRIVER SIDE OF BODY *******	***1***	***KMEM***

PART NO	S	DESCRIPTION	QTY	ID
TL-23-5430		***FIRE RESEARCH, #SPAKR700, PORTABLE LIGHTS, DRIVER SIDE OF BODY***	***1***	***KMEM***
TL-23-5520		***SPECTRA MAX PORTABLE LIGHTS, LIGHTHEADS***	***1***	***KMEM***
TL-23-6700		***SWITCHING LOCATION(S) FOR DRIVER SIDE OF BODY PORTABLE LIGHTS***	***1***	***KMEM***
TL-23-6740		***DRIVER SIDE PORTABLE LIGHTS SWITCHED FROM BREAKER PANEL***	***1***	***KMEM***
		******* PORTABLE LIGHTS, OFFICER SIDE OF BODY *******	***1***	***KMEM***
TL-23-7130		***FIRE RESEARCH, #SPAKR700, PORTABLE LIGHTS, OFFICER SIDE OF BODY***	***1***	***KMEM***
TL-23-7220		***SPECTRA MAX PORTABLE LIGHTS, LIGHTHEADS***	***1***	***KMEM***
TL-23-8400		***SWITCHING LOCATION(S) FOR OFFICER SIDE OF BODY PORTABLE LIGHTS***	***1***	***KMEM***
TL-23-8440		***OFFICER SIDE PORTABLE LIGHTS SWITCHED FROM BREAKER PANEL***	***1***	***KMEM***
	>	**"NOTE" READ THIS BEFORE ADDING ANY ADDITIONAL GROUND LADDERS**	**1**	**KMEM**
		****** HEADER, 102-RM-PL LO GROUND LADDERS**	**1**	**KMEM**
TN-00-5055	>	CENTER LADDER STORAGE, 102-RM-PL	1	KMEM
TN-00-7020		ROLL-UP DOOR - BRUSHED, LADDER COMPARTMENT, REAR MOUNT ONLY	1	KMEM
TN-00-7100	***>***	***STAINLESS STEEL LADDER LOCK SYSTEM***	***1***	***KMEM***
TN-01-0540		ALCO-LITE 115' LADDER COMP, 102-RM-PL	1	KMEM
TN-02-1150		ALCO-LITE PEL-35 35' 2-SECTION EXTENSION LADDER (ALUM)	1	KMEM
TN-02-1170		ALCO-LITE PEL-24 24' 2-SECTION EXTENSION LADDER (ALUM)	1	KMEM
TN-02-2510		ALCO-LITE PRL-16 16' ROOF LADDER W/FOLDING HOOKS (ALUM)	2	KMEM
TN-02-7000		ALCO-LITE AEL-14 14' ATTIC EXTENSION LADDER (ALUM)	1	KMEM
TN-02-8010		ALCO-LITE FL-10 10' FOLDING ATTIC LADDER (ALUM)	1	KMEM
		****** HEADER, PIKE POLES & HOLDERS - AERIALS**	**1**	**KMEM**
TN-10-0500	***>***	***PIKE POLE TUBE(S) - AERIALS***	***6***	***KMEM***
TN-10-2030		***FIRE HOOKS UNLIMITED PIKE POLES 2-6', 2-8', & 2-12' WITH FIB***	***1***	***KMEM***
TN-20-0000		ADDITIONAL ITEMS SHIPPED WITH VEHICLE, ALL AERIAL DEVICES	1	KMEM
		****** HEADER, LOOSE EQUIPMENT - AERIAL**	**1**	**KMEM**
TN-35-1015		TWO (2) ZICO #SAC-44 FOLDING WHEEL CHOCKS, (2) MTD DRIVER SIDE	1	KMEM
		****** HEADER, 102' PLATFORM, REAR MOUNT - NEW 2013**	**1**	**KMEM**
TQ-00-1120		102' PLATFORM, REAR MOUNT, GEN., INTENT & DESIGN STANDARDS - 13	1	KMEM
TQ-00-3000		MOUNTING OF AERIAL, REAR MOUNTS	1	KMEM
TQ-00-3340		HEIGHT AND REACH, 102' 3-SECT. RM PLATFORM - 13	1	KMEM
TQ-00-4000		MATERIAL STANDARDS, ALL DEVICES	1	KMEM
TQ-00-5035		102' PLATFORM, REAR MOUNT HYDRAULIC SYSTEM	1	KMEM
TQ-00-5120		PARKER HOSE KIT - 4 JACK UNIT REARMOUNT	1	KMEM
TQ-00-6120		HYDRAULIC PUMP - PRESSURE COMPENSATED	1	KMEM
TQ-00-7020		HYDRAULIC RESERVOIR - 40 GALLON	1	KMEM
TQ-00-7070		HYDRAULIC OIL - REGULAR - A/W 46 - 120 GAL	1	KMEM
TQ-00-7110		DIVERTER VALVE, REAR MOUNT DEVICES	1	KMEM
TQ-00-7220		OUTRIGGER HYDRAULIC CONTROL VALVE - RM, PROPORTIONAL	1	KMEM
TQ-00-7430		ELECTRIC TURNTABLE HYDRAULIC CONTROL VALVE, RM PLATFORM	1	KMEM
TQ-00-7505		HYDRAULIC SYSTEM FILTRATION	1	KMEM
TQ-00-8520		REARMOUNT PLATFORM, "IQAN" MOTION CONTROL SYSTEM - ELECTRIC CONTROLS @ TT	1	KMEM
TQ-00-8700		HYDRAULIC PUMP PRESSURE - DISPLAY	1	KMEM
TQ-00-8710		ELEVATION ANGLE OF LADDER - DISPLAY	1	KMEM
TQ-00-8715		VERTICAL HEIGHT OF LADDER - DISPLAY	1	KMEM
TQ-00-8725		DEGREE OF ROTATION FROM VEHICLE CENTERLINE - DISPLAY	1	KMEM
TQ-00-8735		E-ZONE SHORT JACK WARNING - DISPLAY	1	KMEM
TQ-00-8740		CRADLE ALIGNMENT MESSAGE - DISPLAY	1	KMEM
TQ-00-8745		BREATHING AIR LEVEL MONITORING - DISPLAY	1	KMEM
TQ-00-8750		DEVICE LOAD MONITORING - DISPLAY	1	KMEM
TQ-00-8760		E-SPEED LADDER TIP SPEED CONTROL - DISPLAY	1	KMEM
TQ-00-8765		E-CUSH RAMP CONTROL FOR ELEVATION - DISPLAY	1	KMEM
TQ-00-8770		E-CUSH RAMP CONTROL FOR EXTENSION & RETRACTION - DISPLAY	1	KMEM
TQ-00-8895		WARNING MESSAGES - TURNTABLE & PLATFORM	1	KMEM
TQ-00-9535		102' PLATFORM, REAR MOUNT, EMERG HYD. PUMP, EPU	1	KMEM
TQ-01-1000		HOT SHIFT PTO W/CONTROLS IN CAB	1	KMEM
TQ-01-1100		FAST IDLE CONTROL FOR ALL AERIAL DEVICES	1	KMEM
TQ-02-0115		102' PLATFORM, REAR MOUNT TORQUE BOX	1	KMEM
TQ-02-1115		102' PLATFORM, REAR MOUNT OUTRIGGERS	1	KMEM
TQ-02-1685		102' PLAT, REAR MOUNT OUTRIGGERS - HORIZONTAL CYLINDER	1	KMEM

PART NO	S	DESCRIPTION	QTY	ID
TQ-02-1885		102' PLAT, REAR MOUNT OUTRIGGERS - VERTICAL CYLINDERS - EXTENDED STROKE	1	KMEM
TQ-02-2010		EXTENDED OUTRIGGER PENETRATION - 11 DEGREES	1	KMEM
TQ-02-2110		IQAN - OUTRIGGER STRING POTENTIOMETER - FOUR (4) OUTRIGGERS	1	KMEM
TQ-02-2200		OUTRIGGER/JACK FOOT PADS, FOUR (4) JACK DEVICES	1	KMEM
TQ-02-2350		AUXILARY JACK PADS, FOUR (4) 24" X 24" x 1" POLY	1	KMEM
TQ-02-2500		OUTRIGGER INTERLOCK SYSTEM & ALARM, ALL DEVICES	1	KMEM
		****** HEADER - OUTRIGGER LIGHTING, FOUR (4) OUTRIGGERS**	**1**	**KMEM**
TQ-02-5145		***AKRON LED OUTRIGGER LAMPS, 4-OUTRIGGERS***	***1***	***KMEM***
TQ-02-5225		***LED OUTRIGGER GROUND LIGHTS - GROTE WHITELIGHT, 4-OUTRIGGERS***	***1***	***KMEM***
TQ-02-5275		OUTRIGGER WARNING LIGHTS FROM LIGHT PACKAGE	1	KMEM
TQ-02-6000		***OUTRIGGER WARNING LIGHT ACTIVATION, LADDER POWER***	***1***	***KMEM***
TQ-02-6800		OUTRIGGER SCOTCHLITE, WHITE	1	KMEM
TQ-02-7250		***PLATFORM, REAR MOUNT, TETHER OUTRIGGER CONTROLS***	***1***	***KMEM***
TQ-02-9200		***OUTRIGGER LEVEL SIDE TO SIDE, ALL REAR MOUNT DEVICES***	***1***	***KMEM***
TQ-03-1070		102' PLATFORM, REAR MOUNT, TURNTABLE - 13	1	KMEM
TQ-03-3010		TURNTABLE DECK - ALUMINUM TREADPLATE	1	KMEM
TQ-04-1853		HEEL PIN STEP ON TURNTABLE,102' - 13	1	KMEM
TQ-04-1855		TURNTABLE HANDRAILS, KNURLED ALUMINUM, 3-SIDES	1	KMEM
TQ-04-2125		HEEL PINS- 102' - 13	1	KMEM
TQ-04-2300		STAINLESS STEEL CRADLE ALIGNMENT ARROWS ON TURNTABLE	1	KMEM
TQ-04-2800		SAFETY CHAINS BETWEEN TURNTABLE HANDRAIL, REAR MOUNTS & TDA	1	KMEM
TQ-04-6100		102' PLATFORM, REAR MOUNT, 5" TURNTABLE SWIVEL	1	KMEM
TQ-04-9000		IQAN - SWIVEL ROTATION ENCODER	1	KMEM
TQ-06-0370		102' PLATFORM, REAR MOUNT, LADDER CONSTRUCTION - 13	1	KMEM
TQ-06-1570		102' PLATFORM RM, LADDER DIMENSIONS - 13	1	KMEM
TQ-06-3000		RUNG COVERS - PHOTOLUMINESCENT, ALL DEVICES	1	KMEM
TQ-06-9000		AERIAL TRAVEL SUPPORT, ALL DEVICES	1	KMEM
TQ-06-9035		***CRADLE ILLUMINATION LIGHTS - GROTE WHITELIGHT LED***	***1***	***KMEM***
TQ-07-1120		102' PLATFORM, REAR MOUNT, ELEVATION SYSTEM - 13	1	KMEM
TQ-07-2800		IQAN - INCLINOMETER	1	KMEM
TQ-07-2801		IQAN - MOMENT LOAD INDICATOR	1	KMEM
TQ-07-2815		IQAN - E-CUSH CONTROL, ELEVATION SYSTEM - PLATFORM & TURNTABLE	1	KMEM
TQ-07-3020		IQAN LOAD METER TURNTABLE & PLATFORM	1	KMEM
TQ-08-1120		102' PLATFORM, REAR MOUNT, ROTATION SYSTEM - 13	1	KMEM
TQ-08-2830		ROTATION MOTOR AND BRAKE - 50.625" EXTERNAL BEARINGS - 13	1	KMEM
TQ-08-2950		SWING DRIVE ADJUSTMENT	1	KMEM
TQ-08-3050		IQAN - "E-SPEED" SAFETY SYSTEM, PLATFORM & TURNTABLE	1	KMEM
TQ-08-3110		IQAN - "E-ZONE" ROTATION SAFETY SYSTEM, 4-OUTRIGGERS	1	KMEM
TQ-09-1120		102' PLATFORM, REAR MOUNT, EXTENSION/RETRACTION SYSTEM - 13	1	KMEM
TQ-09-2350		EXTENSION CYLINDERS PAINTED LADDER PAINT COLOR	1	KMEM
TQ-09-2800		IQAN - EXTENSION SYSTEM STRING POTENTIOMETER	1	KMEM
TQ-09-2815		IQAN - "E-CUSH" EXTENSION/RETRACTION SYSTEM - PLATFORM & TURNTABLE	1	KMEM
TQ-09-3010		LADDER SLIDE PADS, 102 PLATFORM - 13	1	KMEM
		LADDER EXTENSION NUMBERS, ALL DEVICES	**1**	**KMEM**
TQ-09-3150		LADDER LEVEL INDICATOR (BASE SECTION) - LIGHTED	1	KMEM
TQ-09-3310		PLATFORM, CABLE/HOSE/WIRE ROUTING, 3-SECTIONS - 13	1	KMEM
		****** 2010 - REAR MOUNT PLATFORM CONSTRUCTION - 13 - OPTIONS ******	**1**	**KMEM**
TQ-09-6070		PLATFORM STRUCTURE FINISH - PAINTED TO MATCH LADDER COLOR - 13	1	KMEM
TQ-09-6100		PLATFORM DOORS, HINGED @ REAR, LATCHED @ FRONT SELF CLOSE	1	KMEM
TQ-09-6205		PLATFORM, REAR ACCESS LADDER AND REAR GATE - 13	1	KMEM
TQ-09-7105		PLATFORM FLOOR - 13	1	KMEM
TQ-09-7205		PLATFORM MOUNT - 13	1	KMEM
TQ-09-7305		PLATFORM LEVELING SYSTEM - 13	1	KMEM
TQ-09-8000		PLATFORM BOTTOM HEAT SHIELDS, .09" TREAD PLATE	1	KMEM
TQ-09-8100		PLATFORM EXT. HEAT SHIELDS, .09" PAINTED ALUMINUM	1	KMEM
TQ-09-8205		PLATFORM SAFETY BELT LOOPS AND EXTERIOR LIFTING POINTS - 13	1	KMEM
TQ-09-8400		RESCUE LADDER BRACKETS - 13	1	KMEM
TQ-10-2805		***LADDER WALKWAY ILLUMINATION LIGHTS, 4-SECT LADDER***	***1***	***KMEM***

PART NO	S	DESCRIPTION	QTY	ID
TQ-10-2850		***RED - LADDER ILLUMINATION LIGHTS***	***1***	***KMEM***
		****** HEADER - PLATFORM 120 VOLT ELECTRICAL SYSTEM & ACCESSORIES**	**1**	**KMEM**
TQ-11-3001		PLAT, 120 VOLT ELECTRICAL SYSTEM	1	KMEM
TQ-11-3005		PLAT, TWO (2) 120 VOLT NEMA 5-15R RECEPTACLES IN PLATFORM	1	KMEM
TQ-11-3420		***PLAT, WHELEN LED,150 WATT PFP2AP1 120V LIGHTS REAR OF PLATFORM***	***1***	***KMEM***
TQ-11-5070	>	***12V LIGHT REQUIRED ON FRONT OF PLATFORM***	***1***	***KMEM***
TQ-11-5168		***PLAT, WHELEN RECESSED LED 150 WATT 120V LIGHT BOTTOM OF PLATFORM***	***1***	***KMEM***
TQ-11-5650		NO 120V LIGHTS REQUIRED ON SIDES OF PLATFORM	1	KMEM
		****** HEADER - RM PLATFORM, 12 VOLT ELECTRICAL SYSTEM & ACCESSORIES**	**1**	**KMEM**
TQ-11-6020		HEEL PIN STEP LIGHTS - TECNIQ EON 3 LED LIGHTS	1	KMEM
TQ-11-6059		TURNTABLE CONSOLE STEP LIGHT - TECNIQ EON 3 LED	1	KMEM
TQ-11-6075		PLATFORM CONSOLE STEP LIGHT - TECNIQ EON 3 LED LIGHT	1	KMEM
TQ-11-6080		TURNTABLE & PLATFORM CONTROL CONSOLE LIGHTING - LUMA BAR LED H2O	1	KMEM
TQ-11-6125		AMBER LED MARKER LIGHTS - PLATFORM	1	KMEM
TQ-11-6212		***TWO (2) UNITY LED SPOTS @ LADDER BASE SECTION***	***1***	***KMEM***
TQ-11-6335		***TWO (2) UNITY LED SPOT LIGHTS @ PLATFORM***	***1***	***KMEM***
TQ-11-6535		***PLAT, WHELEN RECESSED 150W LED FLOOD LIGHT FRONT OF PLATFORM***	***1***	***KMEM***
TQ-11-6575		***FRONT OF PLATFORM LIGHTS SWITCHING, PLATFORM, TURNTABLE & CAB DASH***	***1***	***KMEM***
TQ-11-8072	>	RM PLATFORM WARNING LIGHTS, CODE 3 PRIZM II 4X6 SERIES LED	1	KMEM
TQ-11-8900		***3 IN 1 PLATFORM ATTACHMENT (ROOF LADDER, STOKES AND LIFTING)***	***1***	***KMEM***
TQ-12-1000		PLATFORM, CONTROL STATIONS	1	KMEM
TQ-12-1060		RM PLATFORM, CONSOLE LOCATED @ LH SIDE OF TURNTABLE, STD	1	KMEM
TQ-12-1095		PAINTED ALUMINUM TURNTABLE CONSOLE - MATCH LADDER COLOR	1	KMEM
TQ-12-1200		102' PLATFORM, REAR MOUNT, TURNTABLE CONTROL STATION	1	KMEM
TQ-12-2310		***AIRHORN CONTROL BUTTON @ TURNTABLE CONTROL CONSOLE***	***1***	***KMEM***
TQ-12-2478		***PLATFORM FRONT LED FLOOD LIGHT SWITCH @ TURNTABLE CONSOLE***	***1***	***KMEM***
TQ-12-2520		FIRE RESEARCH INSIGHT FLOWMETER @ TURNTABLE CONSOLE	1	KMEM
TQ-12-2595		TURNTABLE CONSOLE COVER - PAINTED RADIUS	1	KMEM
TQ-12-6000		IQAN - MULIT-PLEX CONTROLLERS FOR PLATFORM	1	KMEM
TQ-12-6625		***PLATFORM CONTROL STATION, THREE POSITION LOCATIONS***	***1***	***KMEM***
TQ-12-6635		IQAN - MDM III DISPLAY @ PLATFORM CONTROL STATION	1	KMEM
TQ-12-6650		102' PLATFORM, REAR MOUNT, PLATFORM CONTROL STATION	1	KMEM
TQ-12-7100		PAINTED COVER FOR PLATFORM CONTROLLERS	1	KMEM
TQ-14-2200		PLATFORM, FIRE RESEARCH 2-WAY COMMUNICATION SYSTEM - LOWER CONTROL	1	KMEM
TQ-14-2205		PLATFORM, FIRE RESEARCH 2-WAY COMMUNICATION SYSTEM - UPPER SPEAKER/MIC	1	KMEM
TQ-15-0010		LADDER ANGLE INDICATOR (FLY SECTION) - LIGHTED	1	KMEM
TQ-16-1100		102' PLAT, REAR MOUNT, BREATHING AIR SYSTEM, 4500 PSI - 2B	1	KMEM
TQ-16-2500		BREATHING AIR BOTTLE/S PAINTED YELLOW #81485	1	KMEM
TQ-16-3000		50' BREATHING AIR SYSTEM REFILL HOSE, ALL DEVICES W/AIR	1	KMEM
TQ-16-3095		***HANSEN TYPE AIR COUPLINGS, ALL LOCATIONS, ALL DEVICES***	***1***	***KMEM***
TQ-16-3510		IQAN - LOW AIR WARNING SYSTEM ALARM, PLATFORM	1	KMEM
TQ-18-0355		102' PLATFORM, REAR MOUNT, WATERWAY SYSTEM - 13	1	KMEM
TQ-18-1125		102' PLATFORM, REAR MOUNT, WATERWAY - 13	1	KMEM
TQ-18-2565		5" HEEL PIN SWIVEL - S-PIPES, -12 TO 80 DEGREES - 13	1	KMEM
TQ-18-2600		AUTOMATIC WATER DRAIN/VENT	1	KMEM
TQ-18-3000		ALL DEVICES, WATERWAY RELIEF VALVE	1	KMEM
TQ-18-3015		REAR MOUNT AERIAL WATERWAY DRAIN, 1 1/2" VALVE	1	KMEM
TQ-18-3150		***4" NST REAR AERIAL WATERWAY INLET ADAPTER, REAR MOUNTS***	***1***	***KMEM***
TQ-18-3200		***4" NSTF x 4" STORZ KOCHEK SKE-R 30° ADAPTER FOR REAR INLET***	***1***	***KMEM***
TQ-18-3800		INNOVATIVE CONTROLS 2 1/2" GAUGE FOR AERIAL INLET, REAR MOUNTS	1	KMEM
TQ-18-5020		102' RM PLATFORM, PLATFORM WATERWAY SYSTEM, SINGLE GUN	1	KMEM
TQ-18-5100		SHOWER NOZZLE UNDER PLATFORM (MANUAL)	1	KMEM
		PLATFORM MANUAL TFT VALVE UNDER MONITOR - SINGLE	**1**	**KMEM**
TQ-18-5215		2.5" NH GATED ELBOW LEFT HAND - C1 - VALVE UNDER MONITOR	1	KMEM

PART NO	S	DESCRIPTION	QTY	ID
TQ-18-5255		BLIND PLUG - C2 - VALVE UNDER MONITOR	1	KMEM
TQ-18-5265		BLIND PLUG - C3 - VALVE UNDER MONITOR	1	KMEM
TQ-18-5275		2.5" NH GATED ELBOW RIGHT HAND - C4 - VALVE UNDER MONITOR	1	KMEM
TQ-18-6105		***> PLATFORM, SINGLE AKRON #3578 MONITOR***	***1***	***KMEM***
TQ-18-6210		***> PLATFORM, AKRON #5177 NOZZLE***	***1***	***KMEM***
TQ-18-6300		***PLATFORM, AKRON MONITOR CONTROLS W/ AUTO STOW***	***1***	***KMEM***
TQ-20-1150		102' PLATFORM, REAR MOUNT, LADDER CAPACITIES - 13	1	KMEM
TQ-20-3100		102' PLATFORM, WATERWAY CAPACITIES - SINGLE GUN	1	KMEM
TQ-50-0200		***> FIRE DEPT AERIAL FAMILIARIZATION - PROVIDED BY REP***	***1***	***KMEM***
TQ-50-0240		***> REP PROVIDED FAMILIARIZATION - FOUR (4) DAYS***	***1***	***KMEM***
TQ-50-0600		AERIAL SERVICE, ALL DEVICES	1	KMEM
TQ-50-0700		WARNING DECALS, ALL DEVICES	1	KMEM
TQ-52-0100		AERIAL LADDER, MANUALS, TWO (2) SETS	1	KMEM
TQ-70-1105		102' PLATFORM, REAR MOUNT, CERTIFICATION & TESTING - 13	1	KMEM
		****** HEADER - PAINT SECTION - ALL UNITS ******	**1**	**KMEM**
UA-00-1100		GENERAL PAINT DESCRIPTION - ALL	1	KMEM
UA-00-1200		GENERAL PRIMER & PREP DESCRIPTION - LADDER/PLATFORM	1	KMEM
UA-00-1400		GENERAL FINISH PAINT DESCRIPTION - LADDER/PLATFORM	1	KMEM
UA-00-2700		BODY BUFFING & FINISH - LADDER/PLATFORM	1	KMEM
		****** HEADER - LADDER/PLATFORM BODY PAINT ******	**1**	**KMEM**
UA-03-0100		INSIDE/UNDERSIDE BODY PAINTED BLACK - LADDER/PLATFORM	1	KMEM
UA-03-0300		JOB COLOR COMPARTMENT INT W/SPATTER PAINT - LADDER/PLATFORM	1	KMEM
UA-03-0900		SINGLE COLOR BODY PAINT SCHEME - LADDER/PLATFORM	1	KMEM
UA-03-2200		PUMPHOUSE & PLUMBING PAINTED JOB COLOR - LADDER/PLATFORM	1	KMEM
		****** HEADER - TANDEM AXLE CUSTOM CHASSIS PAINT (AERIAL)**	**1**	**KMEM**
UA-05-0050		CUSTOM CAB PRIMER & PREP	1	KMEM
UA-05-0070		CUSTOM FINISH PAINT & PREP	1	KMEM
UA-05-0200		***TWO TONE CUSTOM CAB PAINT SCHEME***	***1***	***KMEM***
UA-05-0350		CUSTOM CAB BUFFING & FINISH	1	KMEM
UA-05-0360		CUSTOM CAB INTERIOR PAINT - TEXTURED GRAY	1	KMEM
UA-05-0400		CUSTOM CHASSIS GLOSS BLACK COLOR FRAME RAILS	1	KMEM
UA-05-0505		CUSTOM CHASSIS WHEEL AND HUB PAINT - TANDEM AXLE	1	KMEM
UA-06-0200		LADDER, PAINTING, ALL DEVICES, WHITE #91528	1	KMEM
UA-06-0450		EXTENSION CYLINDERS PAINTED TO MATCH LADDER COLOR	1	KMEM
UA-06-0905		TORQUEBOX PAINT - BLACK	1	KMEM
UA-06-1100		OUTRIGER PAINT - SILVER URETHABOND 104	1	KMEM
UA-06-1205		TURNTABLE PAINT - LADDER COLOR	1	KMEM
UA-06-1215		TURNTABLE CONSOLE PAINT - LADDER COLOR	1	KMEM
UA-06-1225		LIFT CYLINDERS CONSOLE PAINT - LADDER COLOR	1	KMEM
UA-06-1240		BREATHING AIR CYLINDER/S PAINT - YELLOW #81485	1	KMEM
UA-06-1500		LADDER RUST INHIBITOR - ALL DEVICES	1	KMEM
UA-06-2120		***> PAINT CODES, TWO-TONE COLORS, FILL IN BLANKS***	***1***	***KMEM***
UA-06-2130		PAINT CODES, AERIAL DEVICE - WHITE #91528	1	KMEM
UA-06-2200		PINT OF TOUCH-UP PAINT	1	KMEM
UA-06-2510		FINALIZATION & DETAILING - LADDER/PLATFORM	1	KMEM
UA-06-2850		RUSTPROOFING WARRANTY, TEN (10) YEAR	1	KMEM
		****** HEADER, LETTERING & STRIPING - 102-RM-PL**	**1**	**KMEM**
UA-12-0200		***DEALER TO SUPPLY LETTERING & DECALS***	***1***	***KMEM***
UA-12-1200		***GOLDLEAF W/ DROP SHADOW LETTERING ON FRONT CAB DOORS***	***1***	***DLR***
UA-12-1255		***CUSTOM LETTERING ON FRONT CAB DOORS***	***1***	***DLR***
UA-12-1740		***GOLDLEAF W/ DROP SHADOW LETTERING ON CREW CAB DOORS***	***1***	***DLR***
UA-12-1795		***CUSTOM LETTERING ON CREW CAB DOORS***	***1***	***DLR***
UA-12-2175		***GOLDLEAF W/ DROP SHADOW LETTERING ABOVE WINDSHIELD***	***1***	***DLR***
UA-12-2600		***SCOTCH-CAL W/O DROP SHADOW LETTERING ON FRONT BUMPER***	***1***	***DLR***
UA-12-2700		***GOLDLEAF W/ DROP SHADOW LETTERING ON FRONT OF CAB***	***1***	***DLR***
UA-12-2755		***CUSTOM LETTERING ON FRONT BUMPER***	***1***	***DLR***
UA-12-3100		***GOLDLEAF W/ DROP SHADOW LETTERING ON CAB SIDE PANEL***	***1***	***DLR***
UA-12-3155		***CUSTOM LETTERING ON CAB SIDE PANEL***	***1***	***DLR***
UA-12-3600		***SCOTCH-CAL W/O DROP SHADOW LETTERING ON REAR COMPARTMENT DOOR***	***1***	***DLR***

PART NO	S	DESCRIPTION	QTY	ID
UA-12-3755		CUSTOM LETTERING ON REAR DOOR	1	DLR
UA-14-1210		CUSTOM FIRE DEPARTMENT LOGO	1	DLR
UA-14-1215		SCOTCH-CAL W/ TWO COLORS - LOGO	1	DLR
UA-14-1235		LOCATION - CUSTOM LOGO	1	DLR
UA-20-0100		19" X 144" LETTERING PANELS ON BASE SECTION	1	KMEM
UA-20-0200		SIGN PANELS TO PAINTED TO MATCH AERIAL DEVICE COLOR	1	KMEM
UA-20-0530	U	GOLDLEAF W/ DROP SHADOW LETTERING FOR AERIAL	1	DLR
UA-20-0600		LETTERING ON AERIAL TO BE PROVIDED BY SALE REP	1	KMEM
UA-50-0200		NFPA REQUIRED SCOTCH-LITE STRIPINGSTRIPING - TA AERIAL	1	KMEM
UA-50-0215		6" SCOTCH-LITE STRIPE ON CAB AND BODY - TA AERIAL	1	KMEM
UA-58-5100		WHITE SCOTCH-LITE	1	KMEM
UA-80-6000		REAR CHEVRON STRIPING	1	KMEM
UA-80-6002		50% VERTICAL SURFACE	1	KMEM
UA-80-6050		6" 50% REAR SCOTCH-LITE DIAMOND GRADE CHEVRON STRIPING	1	KMEM
UA-80-6075		RED & FLUORESCENT YELLOW GREEN DIAMOND GRADE SCOTCH-LITE	1	KMEM
		**** PROPOSED - AERIAL WARRANTY PKG, W/PUMP @ REAR OF SPEC	1	KMEM
W6-00-000J		PROPOSED - KME WARRANTY, STARTING ON DELIVERY DATE	1	KMEM
W6-00-0010	X <	PROPOSED - 5 YEAR FCAM WARRANTY - CUSTOM CHASSIS	1	
		$19,500 per email Phil to Byron 9-27-16		
W6-00-003M	>	PROPOSED - 5 YEAR WARRANTY - BASE WITH CUSTOM CHASSIS	1	KMEM
W6-00-0163		PROPOSED - 10 YEAR CUMMINS ISX - EXTENDED WARRANTY	1	KMEM
W6-00-0210		PROPOSED - 5 YEAR ALLISON EVS TRANSMISSION WARRANTY	1	KMEM
W6-00-0230		PROPOSED - LIFETIME FRAMERAIL WARRANTY	1	KMEM
W6-00-0242		PROPOSED - SHEPPARD STEERING GEAR STANDARD - THREE YEAR WARRANTY	1	KMEM
W6-00-0254		PROPOSED - 5 YEAR MERITOR FRONT AXLE - WARRANTY	1	KMEM
W6-00-0262		PROPOSED - 5 YEAR MERITOR 160 SERIES TANDEM AXLE REAR - WARRANTY	1	KMEM
W6-00-0320	>	PROPOSED - 10 YEAR CAB STRUCTURAL WARRANTY	1	KMEM
W6-00-0330		PROPOSED - 10 YEAR BODY STRUCTURAL WARRANTY	1	KMEM
W6-00-0390		PROPOSED - 10 YEAR CAB & BODY CORROSION WARRANTY	1	KMEM
W6-00-0450		PROPOSED - PAINT FINISH WARRANTY, TEN (10) YEAR	1	KMEM
W6-00-0470		PROPOSED - 5 YEAR LETTERING WARRANTY	1	KMEM
W6-00-0490		PROPOSED - 10 YEAR STAINLESS STEEL PIPING WARRANTY	1	KMEM
W6-00-0500		PROPOSED - REAR SUSPENSION - LEAF SPRING - 1 YEAR WARRANTY	1	KMEM
W6-00-0570		PROPOSED - SAFEGUARD TECHNOLOGY - 10 YEAR - RUNG COVERS	1	KMEM
W6-00-0610		PROPOSED - 20 YEAR AERIAL PLATFORM WARRANTY	1	KMEM
W6-00-0650	>	PROPOSED - TEN 10 YEAR AERIAL WATERWAY WARRANTY - AMITY	1	KMEM
W6-00-0655	>	PROPOSED - TEN 10 YEAR AERIAL WATERWAY WARRANTY	1	KMEM
W6-00-0695		PRO - AERIAL DEVICE HYDRAULIC COMPONENT WARRANTIES	1	KMEM
W6-00-0710		PROPOSED - LIFETIME POLY TANK WARRANTY - ALL TANKS	1	KMEM
W6-00-0820		PROPOSED - WATEROUS 5 YEAR PUMP WARRANTY (PARTS & LABOR)	1	KMEM
W6-00-0823	X	WATEROUS FCAM 5 YR WARRANTY CORRECTION	1	
W6-00-1330		PROPOSED - AKRON - 5 YEAR LIMITED WARRANTY	1	KMEM
W6-00-1340		PROPOSED - AKRON HEAVY DUTY VALVE - 10 YEAR WARRANTY	1	KMEM
W6-00-1500		PROPOSED - BOSTROM SEATING 5 YEAR WARRANTY	1	KMEM
W6-00-1600		PROPOSED - SMART POWER HYDRAULIC GENERATORS - 5 YEAR	1	KMEM
W6-01-1153		DEALER FURNISHED PICK-UP & DELIVERY DURING WARRANTY	1	DLR
WA-00-0010		"AERIAL FIRE APPARATUS" NFPA 2016 STATEMENT OF EXCEPTIONS	1	KMEM

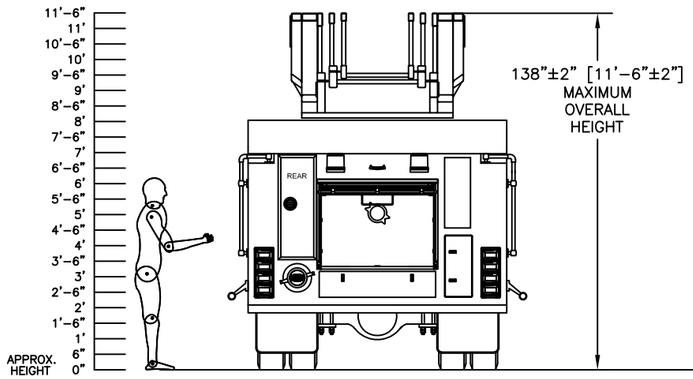

REAR VIEW

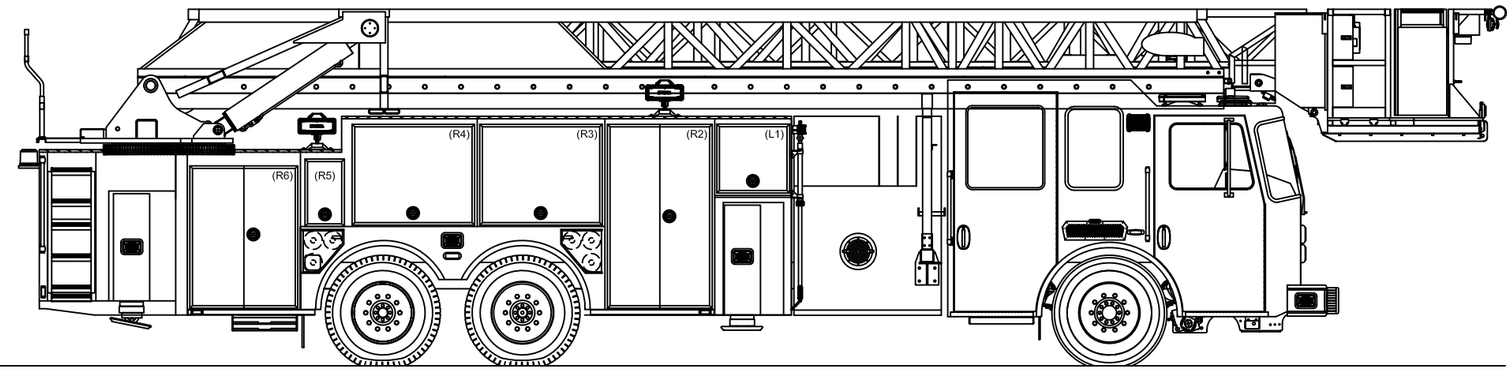

OFFICERS SIDE VIEW

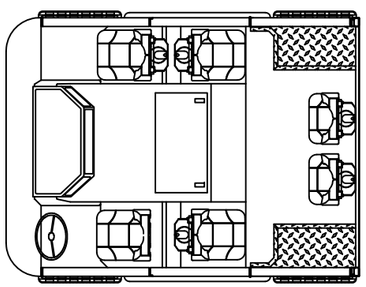

CAB INTERIOR LAYOUT

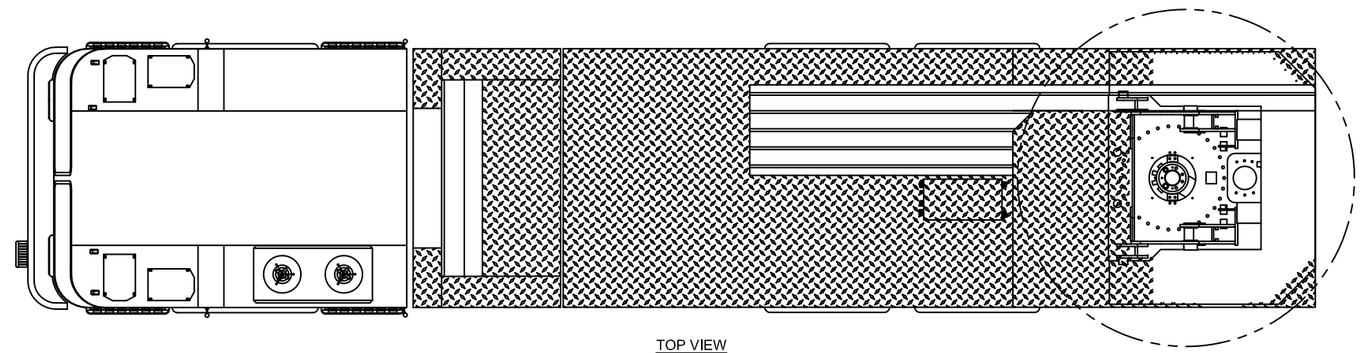

TOP VIEW

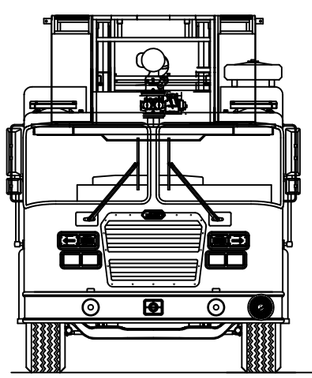

FRONT VIEW

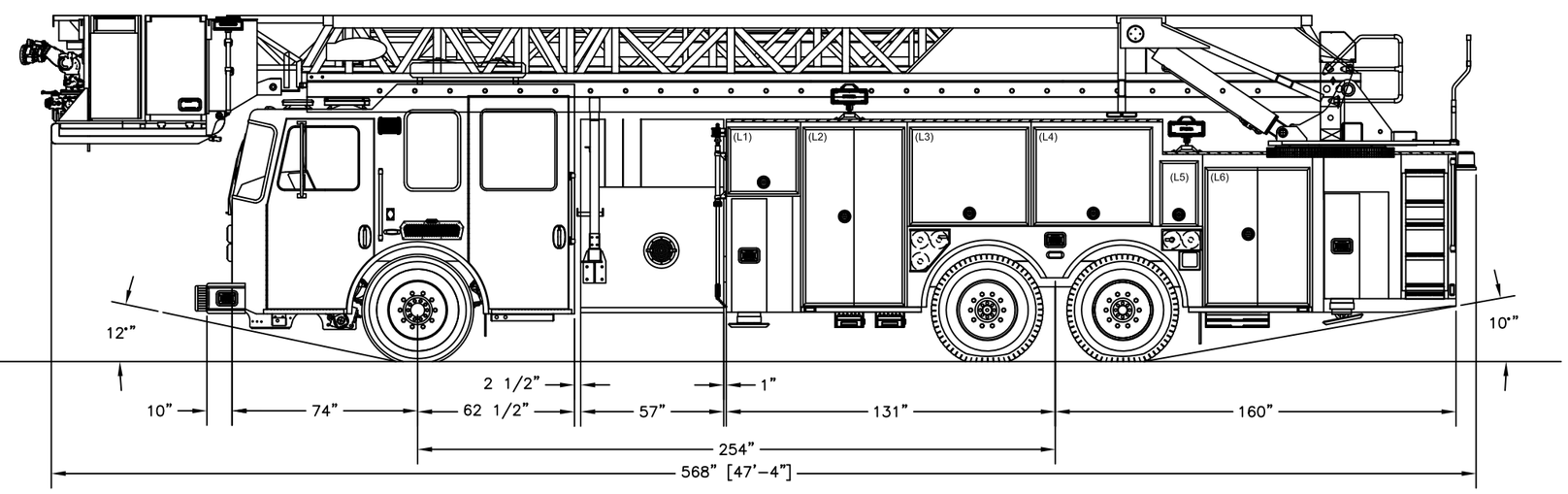

DRIVERS SIDE VIEW

CAB: 100"W PREDATOR MFD 10" RAISED ROOF
ENGINE & TRANS. CUMMINS ISX12 500 HP/ 4000 EVS
AXLES: 23,000# FRONT/60,000# REAR
PUMP: WATEROUS S100 2,000 GPM SINGLE STAGE
WATER TANK: 300 GALLONS
SMART POWER ER 8KW

THIS DRAWING IS A GENERAL CONFIGURATION AND MAY NOT NECESSARILY REFLECT ALL CONTRACTUAL REQUIREMENTS. CONTRACT SPECIFICATIONS SHALL PREVAIL OVER DRAWING.

CUSTOMER APPROVAL:

NAME:

TITLE:

DATE:

SYM	DATE	REVISION DESCRIPTION	APP'D
A			

SALES ENGINEER : TBD

DIMENSIONS ARE APPROXIMATE & MAY VARY DUE TO BUILD ADJUSTMENTS

SCALE	DWG SIZE	DRAWN BY	Z.ZSCHUNKE	DATE
NONE	B	APPROVED BY	P.HOHERCHAK	9-23-16

102' REARMOUNT PLATFORM

MAPC 1 HIGH END

PROPOSAL DRAWING

KME
ONE INDUSTRIAL COMPLEX - NESQUEHONING, PA 18240

KME

HIGH END FCAM 100 FOOT

MIDMOUNT AERIAL PLATFORM

“QUINT”

MAPC 2

Quote SO

MAPC/FCAM	MAPC 2 HIGH END 100 ' MID MOUNT PLATFORM

Exp. Date:	10/22/2016	
Quote No:	10004-0021	
1 MODEL:	00DEVICE04	MID MOUNT PLATFORM
2 LETTER:	LETTER 13	LETTERING & STRIPING, 100' 5-SECTION MM
3 COMP ACC:	000COMP002	COMPARTMENT ACCESSORIES MIDMOUNT AERIAL
4 AC/ELEC:	000AC006	MM WITH PUMP GEN/ELEC AC
6 WARRANTY:	WARNTY-01	AERIAL WARRANTY PACKAGE W/PUMP
SPECIAL:	00000001	SPECIAL, QUOTE OVERRIDE
DEALER:		Dealer Parts

10/04/2016

PART NO	S	DESCRIPTION	QTY	ID
		== MID MOUNT PLATFORM - 713.016 07/13/16 ==	*1*	*KMEM*
		== LETTERING & STRIPING, 100' 5-SECTION MM - 713.016 07/13/16 ==	*1*	*KMEM*
		== COMPARTMENT ACCESSORIES MIDMOUNT AERIAL - 713.016 07/13/16 ==	*1*	*KMEM*
		== MM WITH PUMP GEN/ELEC AC - 713.016 07/13/16 ==	*1*	*KMEM*
		== AERIAL WARRANTY PACKAGE W/PUMP - 713.016 07/13/16 ==	*1*	*KMEM*
		== SPECIAL, QUOTE OVERRIDE - 713.016 07/13/16 ==	*1*	*KMEM*
		DEALER ======= DEALER ======= DEALER	**1**	**DLR**
		QUOTE DATA VERSION: 0713.016 - 2016 DATA SET	**1**	**KMEM**
		INDEX OF PART NUMBERS	**1**	**KMEM**
		****** HEADER - CONTRACTS, PROPOSAL FORM, ETC @ FRONT OF SPECS**	**1**	**KMEM**
		****** PROPOSED - AERIAL SPEC BOILERPLATE**	**1**	**KMEM**
04-00-0000		PROPOSED - GENERAL INFORMATION - NFPA 1901	1	KMEM
04-00-0033		***PROPOSED - COMPLETION INFO***	***1***	***KMEM***
04-00-0040		***PROPOSED - FMVSS CERTIFICATION***	***1***	***KMEM***
04-00-0060		***PROPOSED - RECORDS***	***1***	***KMEM***
04-00-0075		***PROPOSED - TOP OF THE LINE CHASSIS MULTIPLEX***	***1***	***KMEM***
04-00-0107		***PROPOSED - GENERAL CONSTRUCTION - AERIAL***	***1***	***KMEM***
04-00-0120		***PROPOSED - SINGLE LINE RESPONSIBILITY***	***1***	***KMEM***
04-00-0130		***PROPOSED - PRODUCT LIABILITY - $30,000,000.00***	***1***	***KMEM***
04-00-0170		***PROPOSED - CRITERIA & CODE CONFORMANCE - AERIAL***	***1***	***KMEM***
04-00-0193		***PROPOSED - PAINT PERFORMANCE CERTIFICATION***	***1***	***KMEM***
04-00-0200		***PROPOSED - AFTERMARKET SUPPORT WEBSITE***	***1***	***DLR***
04-00-0490		***PROPOSED - PRICES & PAYMENTS***	***1***	***KMEM***
04-00-0540		***PROPOSED - BOND REQUIREMENTS***	***1***	***KMEM***
04-00-0560		***PROPOSED - PERFORMANCE BOND***	***1***	***KMEM***
04-00-0630		***PROPOSED - MATERIAL & WORKMANSHIP***	***1***	***KMEM***
04-00-0660		***PROPOSED - CONTRACT SPECIALIST***	***1***	***KMEM***
04-00-0680		***PROPOSED - APPROVAL DRAWING***	***1***	***KMEM***
04-00-1200		***PROPOSED - DELIVERY***	***1***	***KMEM***
04-00-1215		PROPOSED - INSTRUCTION MANUALS, TWO (2) SETS - CD	1	KMEM
04-00-1215	***X***	***POWERPOINT DELIVERY - PROPOSAL FCAM AERIAL***	***1***	
04-00-1300		***PROPOSED - VEHICLE FLUIDS PLATE***	***1***	***KMEM***
04-00-1500		***PROPOSED - MANUFACTURE GENERATED EXACT BLUEPRINT WITH BID***	***1***	***KMEM***
04-00-1521		***PROPOSED - KME and BULLDOG FAMA MEMBERSHIP***	***1***	***DLR***

PART NO	S	DESCRIPTION	QTY	ID
04-00-1540		***PROPOSED - MANUFACTURED IN THE UNITED STATES***	***1***	***KMEM***
04-00-1550		PROPOSED - ISO 9001 QUALITY MANAGEMENT SYSTEM	1	KMEM
04-00-2440		***PROPOSED - UNDERWRITERS LABORATORIES (UL) TESTING - AERIAL***	***1***	***KMEM***
04-00-2445	***X***	***PROPOSED - UNDERWRITERS LABORATORIES (UL) TESTING - FCAM***	***1***	
04-00-2455		***PROPOSED - UL LINE VOLTAGE TESTING***	***1***	***KMEM***
07-00-0015		"AERIAL FIRE APPARATUS" NFPA 2016 CHAPTERS OF COMPLIANCE	1	KMEM
08-00-0000		VEHICLE DATA PLATE DESCRIPTION	1	KMEM
14-00-0000		NFPA ROLLOVER STABILITY GENERAL STATEMENT	1	KMEM
15-00-0010	>	PROPOSED - PRINCIPAL APPARATUS DIMENSIONS & GVWR	1	KMEM
15-00-0050		***!!! CRITICAL OVERALL HEIGHT REQUIREMENT !!! - "NO"***	***1***	***KMEM***
15-00-0150		***!!! CRITICAL OVERALL LENGTH REQUIREMENT !!! - "NO"***	***1***	***KMEM***
AA-00-002A		***SERVICE CENTER - PROPOSAL FCAM***	***1***	***DLR***
BA-00-0325		MM PLATFORMS	1	KMEM
BA-00-3000		SEAT AND SEAT BELT ANCHOR TESTING	1	KMEM
BA-01-1410		***<1> 100'-5-MM-PL WITH PUMP***	***1***	***KMEM***
BA-01-3800		***<2> TRAVEL HEIGHT 119", 100-5-MM-PL LOW BODY (WITH PUMP)***	***1***	***KMEM***
BA-02-0715		<3> MM-PL PREDATOR -TANDEM AXLE	1	KMEM
BA-04-0195		AERIAL CHASSIS, MID-MOUNT PLATFORM -TANDEM AXLE (HEAVY)	1	KMEM
		****** HEADER - 100" PREDATOR CAB ******	**1**	**KMEM**
BA-04-0805		PREDATOR CAB - BASE, 100"	1	KMEM
BA-04-0850		PREDATOR CAB - BASE - ALUMINUM CONSTRUCTION	1	KMEM
BA-04-0990		PREDATOR 100" - CRASH TESTING	1	KMEM
BA-04-0995		PREDATOR 100" - 120,000# ROOF & SIDE TESTING	1	KMEM
BA-04-1300		PREDATOR 100" - MFD CAB LENGTH (DIM - 62 1/2")	1	KMEM
BA-04-1900		PREDATOR 100" - VISTA DIMENSIONS FRONT SEATING & ENGINE ENCLOSURE	1	KMEM
BA-04-4000		10" RAISED ROOF - 100" PREDATOR	1	KMEM
BA-04-5000		CAB ROOF DRIP RAIL 100" PREDATOR/PANTHER	1	KMEM
BA-05-0260		***BATTERY ACCESS DOORS - REAR STEP WELLS, EACH SIDE***	***1***	***KMEM***
BA-05-0510		FULL LENGTH CAB DOORS - 100" PREDATOR "MFD, LFD & X-LFD"	1	KMEM
BA-05-0670		CAST ANTI-SLIP ENTRY STEPS FOR FULL LENGTH CAB DOORS	1	KMEM
BA-05-1010		PREDATOR DOOR LATCHES, HD LOOP STYLE LATCH - FULL LENGTH DOORS	1	KMEM
BA-05-1035		LOCKING CAB DOOR , OUT + IN, LOOP STYLE LATCH	1	KMEM
BA-05-1037		KEY MODEL #2001	1	KMEM
BA-05-1103		WINDOWS, MANUAL HAND CRANK STYLE - 100"	1	KMEM
BA-05-1130		DOOR WINDOW TRIM EXTRUSION, 4 - DOOR	1	KMEM
BA-05-1310		UPPER INTERIOR DOOR PANELS - ABS, 4-DOOR	1	KMEM
BA-05-1410		BRUSHED ALUMINUM DOOR SCUFF PLATES, 4 - DOOR	1	KMEM
BA-05-1510		SCOTCHLITE MATERIAL ON INTERIOR OF DOOR PANEL 4-DOORS	1	KMEM
		****** HEADER - CAB EXTERIOR ACCESSORIES & OPT, 100" PREDATOR**	**1**	**KMEM**
BA-05-2410		WINDSHIELD, 100" PREDATOR CAB	1	KMEM
BA-05-2425		WINDSHIELD WIPERS & WASHERS - 100" PREDATOR	1	KMEM
BA-05-2450		SIDE VIEWING WINDOWS NON-SLIDING - PREDATOR	1	KMEM
BA-05-2500		DARK TINT WINDOWS, SIDE VIEWING, REAR DOORS & REAR WALL	1	KMEM
BA-05-2600		GRAB RAILS EXTERIOR, KNURLED ALUMINUM EXTRUSION	1	KMEM
BA-05-2668		PREDATOR INTERIOR GRAB HANDLES - WHEELABRATED	1	KMEM
BA-05-2692		***INTERIOR "A" POST GRAB HANDLE "PREDATOR" - WHEELABRATED***	***1***	***KMEM***
BA-05-2715		FRONT CAB GRILLE - FORMED STAINESS STEEL MIRROR FINISHED - 100" PREDATOR	1	KMEM
BA-05-2780		FRONT CAB GRILLE SCREEN - BLACK MESH - 100" PREDATOR/PANTHER	1	KMEM
BA-05-2815		SIDE CAB GRILLES - SHAPED BRIGHT FINISHED - 100" PREDATOR	1	KMEM
BA-05-2900		ALUMINUM CAB WHEEL LINERS	1	KMEM
BA-05-2910		ALUMINUM CAB FENDERETTES	1	KMEM
BA-05-3000		FRONT MUD FLAPS	1	KMEM
BA-05-3500		VELVAC MIRRORS " WEST COAST" HEATED / REMOTE - W/CONVEX SPOT	1	KMEM
BA-05-3690		MIRROR CONTROL IN MULTIPLEX CONTROL SCREEN	1	KMEM
BA-05-5115		INTERIOR TRIM, 100" PREDATOR	1	KMEM
BA-05-5180		CUSTOM CAB INTERIOR PAINT - TEXTURED GRAY	1	KMEM
BA-05-5200		PREDATOR REAR INTERIOR CAB WALL, GRAY DURAWEAR UPHOLSTERY	1	KMEM

PART NO	S	DESCRIPTION	QTY	ID
BA-05-5335		TREAD PLATE KICK PLATE ON LOWER INTERIOR REAR WALL	1	KMEM
BA-05-5530	>	STORAGE COMPARTMENTS UNDER FRONT SEATS - 100" PREDATOR	1	KMEM
BA-05-5610		BARYFOL FLOORING	1	KMEM
BA-05-5650		1" ACOUSTICAL INSULATION	1	KMEM
BA-05-5824		ENGINE ENCLOSURE 100" PREDATOR FAB DASH (DURAWEAR)	1	KMEM
BA-05-5860		ENGINE ENCLOSURE MATERIAL - ALUMINUM CAB	1	KMEM
BA-05-5920		***HD SOUNDPROOFING/ INSULATION PACKAGE UNDER ENGINE ENCLOSURE***	***1***	***KMEM***
BA-05-5925		***HD SOUNDPROOFING/INSULATION BETWEEN UPHOLSTERY & ENGINE ENCL***	***1***	***KMEM***
BA-05-7040		SUN VISORS, 100" PREDATOR CAB, PADDED VINYL	1	KMEM
BA-06-0500	>	TOP ROLLOVER PROTECTION SYSTEM W/SLAVE SENSOR - FIVE (5) OR MORE SEATS	1	KMEM
		****** HEADER - CAB SEATING & ACCESSORIES, 100" - PREDATOR MFD**	**1**	**KMEM**
		****** SEATING OPTIONS BOSTROM, 100" - PREDATOR - MFD - ROLLTEK**	**1**	**KMEM**
BA-06-3222	***>***	***DRIVERS SEAT, BOSTROM EX8 SIERRA ELECTRIC - ABTS - SIDE CURTAIN AIRBAG***	***1***	***KMEM***
BA-06-3632		***OFFICERS SEAT, BOSTROM 450 SCBA, ABTS, FIXED - SIDE CURTAIN AIRBAG***	***1***	***KMEM***
BA-06-3930		***BOSTROM "SECUREALL" SCBA BOTTLE BRACKET - OFFICER'S SEAT***	***1***	***KMEM***
		MFD CAB - REAR FACING BOSTROM SEATS - ROLLTEK	**1**	**KMEM**
BA-06-4112		BOSTROM 450 SCBA ABTS REAR FACING, OUTBOARD, DS - SIDE CURTAIN AIRBAG	1	KMEM
BA-06-4195		***BOSTROM "SECUREALL" SCBA BOTTLE BRACKET - OUTBOARD, DS***	***1***	***KMEM***
BA-06-4212		BOSTROM 450 SCBA ABTS REAR FACING,OUTBOARD, OS - SIDE CURTAIN AIRBAG	1	KMEM
BA-06-4295		***BOSTROM "SECUREALL" SCBA BOTTLE BRACKET - OUTBOARD, OS***	***1***	***KMEM***
		MFD CAB - FORWARD FACING BOSTROM SEATS - ROLLTEK	**1**	**KMEM**
BA-06-5595		**** (2) FORWARD SEATS - UPGRADE SEAT RISER IF (4) ARE NEEDED ****	1	KMEM
BA-06-6210		***(2) - BOSTROM 450 SCBA ABTS FORWARD FACING, CENTER***	***1***	***KMEM***
BA-06-6250		***FLIP UP SEAT, FORWARD FACING, (2) CENTER***	***1***	***KMEM***
BA-06-6325		***BOSTROM "SECUREALL" SCBA BOTTLE BRACKET - (2) CENTER FORWARD***	***1***	***KMEM***
BA-06-7100		CENTER OPEN COMPT. SEAT BASE - BOLT IN - MFD, XMFD	1	KMEM
BA-06-8005		BOSTROM SEATING MATERIAL, GRAY TWEED DURAWEAR	1	KMEM
BA-06-8055		NO SCBA PARADE COVERS SUPPLIED	1	KMEM
		****** HEADER - VEHICLE DATA RECORDER SYSTEMS**	**1**	**KMEM**
BA-06-9103	>	CLASS ONE SEAT BELT WARNING SYSTEM - UP TO 6 POSITIONS - ULTRAVIEW DISP	1	KMEM
BA-06-9125		SIX (6) SEATING POSITIONS (SELECT QTY)	1	KMEM
BA-06-9310		CLASS ONE VEHICLE DATA RECORDER - MULTIPLEX	1	KMEM
		****** HEADER - CAB INTERIOR ACCESSORIES & OPTIONS, 100" PREDATOR**	**1**	**KMEM**
BA-07-7010	***>***	***STANDARD #MATM RADIO ANTENNA INSTALLED***	***2***	***KMEM***
		****** HEADER - INSTRUMENTATION & CONTROLS, 100" PREDATOR - NARROW VISTA**	**1**	**KMEM**
BA-08-0214		DASH & CENTER CONSOLE - 100" PREDATOR FAB DASH (UPHOLSTERED)	1	KMEM
BA-08-0275		INSTRUMENT PANEL, 100" PREDATOR - NARROW	1	KMEM
BA-08-0300		INTER AXLE LOCK CONTROL SWITCH	1	KMEM
BA-08-0315		DIESEL EXHAUST FLUID LEVEL GAUGE	1	KMEM
BA-08-0320		ENGINE COMPRESSION BRAKE CONTROLS	1	KMEM
BA-08-0620		ULTRAVIEW 450 DISPLAY ON CAB DASH FOR ES-KEY SYSTEM	1	KMEM
BA-08-1220		INDICATOR CLUSTER, 100" PREDATOR	1	KMEM
BA-08-1225		"INTER AXLE LOCK" INDICATOR CLUSTER	1	KMEM
BA-08-1235		"ATC DISABLED" INDICATOR CLUSTER	1	KMEM
BA-08-1240		"ATC ACTIVE" INDICATOR CLUSTER	1	KMEM
BA-08-1265		***"OUTRIGGERS NOT STOWED" INDICATOR ON DASH***	***1***	***KMEM***
BA-08-1800		LOWER RIGHT AUXILIARY SWITCH PANEL - PREDATOR - FAB	1	KMEM
BA-08-1900		***PUMP SHIFT CONTROL ON LOWER LEFT DASH PANEL***	***1***	***KMEM***
BA-08-1950		MULTIPLEX CONTROL PUMP SHIFT SWITCH - MULTIPLEX	1	KMEM
BA-08-2000		***AERIAL LADDER, LADDER POWER/PTO SWITCHES IN CAB***	***1***	***KMEM***

PART NO	S	DESCRIPTION	QTY	ID
BA-08-2750		PREDATOR COMPUTER TERMINAL IN FRONT OF OFFICER (FABRICATED)	1	KMEM
BA-08-2905		OVERHEAD ABS PANEL, FLAT FACED, 100" PREDATOR	1	KMEM
BA-08-3105		HEATER/DEFROSTER & ACCESS, PREDATOR 100" - 10" RAISED ROOF	1	KMEM
BA-08-6900		HVAC CONTROL SYSTEM - INCOPORATED INTO MULTIPLEX CONTROL DISPLAY	1	KMEM
BA-08-9000		CAB TILT SYSTEM & OPTIONS	1	KMEM
BA-08-9010	***>***	***AUXILIARY - MANUAL CAB LIFT BACKUP SYSTEM***	***1***	***KMEM***
BA-08-9110		PARKING BRAKE/CAB TILT INTERLOCK	1	KMEM
		FRAME & AXLE PACKAGE, MID-MOUNT TANDEM AXLE CHASSIS	**1**	**KMEM**
BA-09-5500		110,000 PSI FRAME: MID-MOUNT AERIAL CHASSIS, SPECIAL FRAME	1	KMEM
		HEADER - FRONT BUMPER, EXTENSIONS & ACCESSORIES	**1**	**KMEM**
BA-10-0050	>	BUMPER 12" STAINLESS STEEL CONTOUR - ALL CABS	1	KMEM
BA-10-0110		10" FRONT BUMPER EXTENSION WITH TREAD PLATE GRAVEL SHIELD	1	KMEM
BA-10-0405		TREADPLATE GRAVEL SHIELD STANDARD INSTALLATION	1	KMEM
BA-10-2010		TWO (2) PAINTED TOW HOOKS BELOW FRONT BUMPER	1	KMEM
BA-14-0170		23,000# FRONT AXLE MERITOR MFS-20-133A-N	1	KMEM
BA-14-1110		MERITOR, EX-225 17" DISC BRAKES, FRONT AXLE, W/ AUTO SLACK ADJUSTMENT	1	KMEM
BA-14-2040		SUSPENSION FRONT - 23,000# AXLES	1	KMEM
BA-14-2110		FRONT AXLE SHOCK ABSORBERS - MONROE "MAGNUM - 70"	1	KMEM
BA-15-1060		58,000# TANDEM REAR AXLE MERITOR RT-58-185	1	KMEM
BA-15-1510		16.5" X 7" S-CAM BRAKES - MERITOR REAR TANDEM W/AUTO SLACK ADJ.	1	KMEM
BA-15-2810		VEHICLE TOP SPEED - 2016 NFPA STATEMENT	1	KMEM
BA-15-4640	>	RIDEWELL "DYNALASTIC" 202S RUBBER BLOCK SUSPENSION, TANDEM AXLE 58,000#	1	KMEM
		****** HEADER - BRAKE SYSTEM, TANDEM AXLE VEHICLE**	**1**	**KMEM**
BA-20-1005		BRAKE SYSTEM, TA CHASSIS	1	KMEM
BA-20-1110		ABS BRAKING FOR TANDEM REAR AXLE CHASSIS	1	KMEM
BA-20-1275	>	ELECTRONIC STABILITY CONTROL (ESC) WITH (ATC) - CUSTOM TA	1	KMEM
BA-20-1530		AIR RESERVOIRS 7100 CU IN TA, BASE	1	KMEM
BA-20-1810		***STAINLESS STEEL AIR TANK BRACKETS - (4 TANKS)***	***1***	***KMEM***
BA-20-2025		1/4 TURN DRAIN VALVES ON ALL AIR TANKS	1	KMEM
BA-20-3000		AIR DRYER, HEATED - BENDIX AD-9 12VOLT	1	KMEM
BA-20-5005		COLOR CODED SYNFLEX BRAKE LINES W/QUICK RELEASE FITTINGS - TA	1	KMEM
BA-20-5500		AIR COMPRESSOR -WABCO 18.7 CFM- STD. FOR ALL CUMMINS ENGINES	1	KMEM
BA-20-5810		BRAKE TREADLE VALVE	1	KMEM
BA-20-6010		PARKING BRAKE CONTROL - NEAR DRIVER - ALL WHEEL LOCK	1	KMEM
BA-20-6500		***AUX. AIR INLET IN LH DOOR AREA (TO CHARGE VEHICLE AIR SYSTEM)***	***1***	***KMEM***
		HEADER, TIRE AND WHEEL OPTIONS	**1**	**KMEM**
		HEADER, WHEELS, 23,000 FRONT AXLE - ALUMINUM	**1**	**KMEM**
BA-25-1040		FRONT WHEELS, POLISHED ALUMINUM, 22.5 X 13, 24,390#	1	KMEM
BA-25-1045		FRONT WHEELS, LUG AND HUB TRIM (ALUMINUM WHEELS)	1	KMEM
BA-25-2030	>	FRONT, GOODYEAR 425/65R22.5 L 24,400# G296 MSA MIXED - 68MPH	1	KMEM
BA-25-2400		GOODYEAR - FIRE SERVICE RATING - TIRE RESTRICTIONS	1	KMEM
		HEADER, TIRES & WHEELS, 58,000 TANDEM REAR AXLE	**1**	**KMEM**
BA-25-5090		***REAR WHEELS, POLISHED ALUMINUM, 22.5 X 9, TA***	***1***	***KMEM***
BA-25-5115		***REAR WHEELS, LUG AND HUB TRIM, TA (ALUMINUM)***	***1***	***KMEM***
BA-25-7055	>	REAR, GDYR 315/80R22.5 J 64,000# RHD II+ TRACTION - 75MPH, TA	1	KMEM
BA-25-7400		GOODYEAR - FIRE SERVICE RATING - TIRE RESTRICTIONS	1	KMEM
BA-25-9905		TIRE PRESSURE MONITORING - LED VALVE STEM CAPS - TEN TIRES	1	KMEM
		100" PREDATOR - ENGINE PACKAGE, MID-MOUNT TANDEM AXLE CHASSIS	**1**	**KMEM**
		****** 100" - HEADER, ENGINE & ENGINE COMPONENTS**	**1**	**KMEM**
BA-30-3200	>	CUMMINS ISX12 - 500 HP @ 1800 RPM TQ 1645 lb-ft @ 1100 - PREDATOR NARROW	1	KMEM
BA-30-9810		PROPOSED - ENGINE CERTIFICATION CUSTOM CHASSIS	1	KMEM
BA-32-0035		COOLING/RADIATOR, 100" PREDATOR - NARROW	1	KMEM
BA-32-0070		ENGINE COOLANT FILTER - CUMMINS ISC - ISX	1	KMEM
BA-32-0085		COOLING SYSTEM CRITERIA	1	KMEM
BA-32-0100		TRANSMISSION COOLER	1	KMEM
BA-32-0120		RADIATOR SKID PLATE	1	KMEM

PART NO	S	DESCRIPTION	QTY	ID
BA-32-0160		CHARGED AIR COOLER (FRONT MOUNT)	1	KMEM
BA-32-0245		COOLANT FAN, W/CLUTCH - CUMMINS ISX12	1	KMEM
BA-32-0340		HEATER AND COOLANT HOSES/PIPING	1	KMEM
BA-32-0420		LOW COOLANT INDICATOR LIGHT AND ALARM IN CAB	1	KMEM
BA-33-0020	>	SECONDARY BRAKING - ENGINE COMPRESSION BRAKE	1	KMEM
BA-33-0150		FAST IDLE CONTROL FOR ALL ELECTRONIC ENGINES - SMART WHEEL	1	KMEM
BA-33-0160		ENGINE AIR CLEANER	1	KMEM
BA-33-0180		SPARK ARRESTOR	1	KMEM
BA-33-0200		ACCELERATOR PEDAL - FLOOR MOUNT	1	KMEM
BA-33-0250		REMOTE THROTTLE & INTERLOCK HARNESS	1	KMEM
BA-40-0300		ALLISON 4000EVS TRANS. - COMPRESSION BRAKE	1	KMEM
BA-40-0660		FIVE (5) SPEED AUTOMATIC TRANSMISSION - 4000 SERIES	1	KMEM
BA-40-0700		ALLISON TRANSMISSIONS, ELECTRONIC TOUCH PAD SHIFTER IN CAB	1	KMEM
BA-40-0855		TRANSMISSION OIL LEVEL SENSOR	1	KMEM
BA-40-0860		ALLISON PARK TO NEUTRAL	1	KMEM
BA-40-0910		ALLISON PRESELECT PROGRAMMING	1	KMEM
BA-40-0920		PRESELECT PROGRAMMED FOR 4TH GEAR	1	KMEM
BA-40-4720		TES-389 TRANS FLUID 4000EVS TRANSMISSION	1	KMEM
BA-45-0110		DRIVE LINES DANA-SPICER #1810 SERIES	1	KMEM
BA-49-0100		DIESEL EXHAUST FLUID TANK - 5 GALLON	1	KMEM
BA-50-0110		EXHAUST SYSTEM - DPF & SCR SYSTEM - INLINE SYSTEM	1	KMEM
BA-50-0155		ALUMINIZED STEEL EXHAUST TAILPIPE/OUTLET OS - DPF + SCR SYSTEM	1	KMEM
BA-50-0200	***>***	***EXHAUST TAILPIPE MODIFIED FOR FIRE DEPT. VENTILATION SYSTEM***	***1***	***KMEM***
BA-50-2500		FUEL SYSTEM	1	KMEM
BA-50-2515	>	FUEL TANK - 65 GALLON, STEEL - ALL MID-MOUNTS	1	KMEM
BA-50-2600		***STAINLESS STEEL FUEL TANK STRAPS IN LIEU OF STEEL***	***1***	***KMEM***
BA-50-2625		FUEL LINES - FIBER REINFORCED HOSE	1	KMEM
BA-50-2637		***DUAL FUEL LINE SHUT-OFF VALVES***	***1***	***KMEM***
BA-50-2645	>	CUMMINS FUEL-WATER SEPARATOR	1	KMEM
BA-50-2670		FUEL PUMP SECONDARY ELECTRIC, REQ. ON 210" W-B OR LONGER	1	KMEM
BA-50-2700		FUEL POCKET, LEFT SIDE REAR WHEEL WELL PANEL	1	KMEM
BA-50-5050	>	STEERING - DUAL SHEPPARD POWER STEERING GEARS	1	KMEM
BA-50-7115		STEERING COLUMN - CLOCK SPRING "NARROW"	1	KMEM
BA-50-7155		18" STEERING WHEEL - 4 SPOKE - "NARROW"	1	KMEM
BA-50-7170		***SMART WHEEL CONTROLS ON STEERING WHEEL***	***1***	***KMEM***
BA-50-9000		ROAD SAFETY KITS	1	KMEM
		****** HEADER, MM PLATFORM CHASSIS ELECTRICAL, 100" PREDATOR (OPTIONS)**	**1**	**KMEM**
		******* HEADER, MM PLATFORM W/ PUMP BODY ELECTRICAL (OPTIONS)***	***1***	***KMEM***
BE-01-0005		PREDATOR CHASSIS ELECTRICAL SYSTEM DESCRIPTION	1	KMEM
BE-01-0105		PREDATOR CHASSIS WIRING INSTALLATION	1	KMEM
BE-01-0150		DIRECT BATTERY GROUNDING STRAP - PREDATOR	1	KMEM
BE-01-0153		EMI/RFI PROTECTION	1	KMEM
BE-01-0205		PREDATOR 12 VOLT ELECTRICAL SYSTEM TESTING	1	KMEM
BE-05-0353		CLASS-1 ES-KEY MULTI-PLEXED ELECTRICAL SYSTEM 100" PREDATOR	1	KMEM
BE-05-0450		CLASS-1 ES-KEY ULTRAVIEW 450 DISPLAY	1	KMEM
BE-05-0800		INTER-LOCK MODULE FOR MULTIPLEX SYSTEM	1	KMEM
BE-05-0900		CHASSIS DIAGNOSTICS SYSTEM	1	KMEM
BE-05-1160		VOLTAGE MONITORING SYSTEM - 12 VOLT	1	KMEM
BE-05-1165		INDICATOR LIGHT AND ALARM PROVE-OUT SYSTEM	1	KMEM
BE-05-1170		SEQUENCER	1	KMEM
BE-05-1175		ELECTRICAL HARNESS INSTALLATION - 12 VOLT	1	KMEM
BE-10-0487		DELCO REMY 40SI, 320 AMP BRUSHLESS ALTERNATOR	1	KMEM
BE-15-0730		***BATTERIES - SIX (6) EXIDE GROUP 31, 925CCA***	***1***	***KMEM***
BE-15-1105		PREDATOR BATTERY STORAGE, STEEL, MFD, XMFD, LFD, XLFD	1	KMEM
BE-15-1500		BATTERY DISCONNECT SWITCH, ALL UNITS	1	KMEM
BE-15-1555		COLE HERSEE BATTERY JUMPER STUDS, DS BATTERY BOX	1	KMEM
BE-20-1635		***120 VOLT 20 AMP SUPER AUTO EJECT FOR BATT CHARGER - CUSTOM***	***1***	***KMEM***
BE-20-1715		***SHORELINE RECEPTACLE LABEL - NFPA***	***1***	***KMEM***
BE-20-1720		***RED COVER FOR KUSSMAUL AUTO-EJECT RECEPTACLE, #091-55RD***	***1***	***KMEM***

PART NO	S	DESCRIPTION	QTY	ID
BE-20-1750		SHORELINE LOCATION - ADJACENT TO DRIVER'S DOOR	1	KMEM
BE-20-2020		KUSSMAUL MODEL 1200, 40AMP W/ 120 VAC 125PSI AIR COMP.	1	KMEM
BE-20-3220		KUSSMAUL AUTO DRAIN ACHP - 120V	1	KMEM
BE-30-0100		CONTROL SWITCHING - EATON MULTIPLEX SWITCHES - 12 ABOVE DRIVER	1	KMEM
BE-30-0120		CONTROL SWITCHING - EATON MULTIPLEX SWITCHES - 9 LOWER PANEL	1	KMEM
BE-30-2500		CONTROL SWITCHING LABELING	1	KMEM
BF-00-0515		WELDON #8080-8000-13 WHITE/RED LED INTERIOR LIGHTS (4)	1	KMEM
BF-00-5000		DOOR OPEN INDICATOR W/ INTEGRAL AUDIBLE ALARM	1	KMEM
		**** HEADER, 12V POWER/ USB CHARGING/ POWER - GROUND CIRCUITS, CUSTOM ****	1	KMEM
BF-01-1040	>	12 VOLT POWER PORT LOCATED NEAR DRIVER	1	KMEM
BF-01-1060	>	12 VOLT POWER PORT LOCATED NEAR OFFICER	1	KMEM
BF-01-3020	>	ROUND USB CHARGING PORT LOCATED NEAR DRIVER	1	KMEM
BF-01-3040	>	ROUND USB CHARGING PORT LOCATED NEAR OFFICER	1	KMEM
BF-01-6000		12 VOLT POWER AND GROUND CIRCUIT FOR ACCESSORIES IN DASH	1	KMEM
BF-01-6040		12 VOLT POWER AND GROUND CIRCUIT W/ IGNITION, BEHIND OFFICERS SEAT	1	KMEM
		**** HEADER, REAR/SIDE VISION CAMERA SYSTEMS ****	1	KMEM
BF-15-3600		OPTIMO REAR VISION/GPS CAMERA SYSTEM, 7.0" COLOR LCD	1	KMEM
BF-15-4505		REAR VISION MONITOR MOUNTED ON CAB CEILING	1	KMEM
BF-20-0040		DUAL HEADLIGHTS, LED, PREDATOR - J.W. SPEAKER - DUAL BEZELS	1	KMEM
BF-20-0320		DAYTIME RUNNING LIGHTS, ALL CABS	1	KMEM
BG-00-0055		DUAL MODULE w/ CODE 3 65STA LED TURN SIGNAL & REQ WARN LIGHT	1	KMEM
BG-00-0430		CUST MM PLATFORM CHASSIS LED MARKER LIGHTS	1	KMEM
BG-00-0530		CUST MM PLATFORM BODY LED MARKER LIGHTS	1	KMEM
BG-00-1200		WHELEN LED MARKER LIGHTS @ TOP FRONT ROOF EDGE OF CAB	1	KMEM
BG-00-1600		TRUCK-LITE MARKER LIGHTS @ EA SIDE OF CAB, ADJACENT TO DRIVER DOOR	1	KMEM
BG-00-1610		TRUCK-LITE MARKER/TURN LIGHTS @ EA SIDE OF BODY	1	KMEM
BG-00-1650		TRUCK-LITE MARKER LIGHTS @ REAR OF BODY - MM PLAT	1	KMEM
BG-00-1800		TRUCK-LITE DOT AMBER REFLECTORS @ SIDE OF BODY	1	KMEM
BG-00-1810		TRUCK-LITE DOT RED REFLECTORS @ REAR OF BODY	1	KMEM
BG-00-2915		TECNIQ #L10 LED LICENSE PLATE LIGHT @ DS REAR OF BODY	1	KMEM
BG-00-3110		BRITAX, 6" ANGLED RUBBER LED LIGHT @ REAR BODY CORNERS	1	KMEM
BG-02-2525		CODE 3, #65 LED BRAKE & TURN W/ HALOGEN REVERSE	1	KMEM
BH-04-1050		CAB STEP LIGHTS, TECNIQ EON 3 LED, ALL DEVICES	4	KMEM
BH-04-1130		BODY STEP LIGHTS, TECNIQ EON 3 LED, ALL DEVICES	4	KMEM
BH-05-2310		AERIAL ACCESS LADDER ILLUMINATION - WHELEN 3" LED - MM BODY	1	KMEM
	>	**** HEADER, HOSE BED LIGHTING ****	1	KMEM
BH-06-0200		UNITY LED HOSE BED LIGHTS, ALL DEVICES	1	KMEM
BH-06-2200		HOSE BED WORK LIGHT - SWITCH	1	KMEM
		**** HEADER, SCENE LIGHTS - MM / TDA	1	KMEM
		**** HEADER, SCENE LIGHTS - MM PLATFORM W/ PUMP	1	KMEM
BH-10-7000		FRC SPECTRA 900 LED SCENE LIGHTS BEHIND FRONT CAB DOORS	1	KMEM
BH-10-7020		FRC SPECTRA 900 LED SCENE LIGHTS REAR OF CAB, MM/TDA	1	KMEM
BH-10-8000		CONTROL SWITCHES IN CAB FOR BEHIND FRONT CAB DOOR LIGHTS	1	KMEM
BH-10-8040		CONTROL SWITCH IN CAB FOR REAR OF CAB LIGHTS	1	KMEM
BH-11-0810		NFPA (4) AMDOR H2O LED GROUND LIGHTS, BELOW CAB DOORS	1	KMEM
BH-11-0840		GROUND LIGHTS, 2 LED BELOW PUMP PANEL RUNNING BOARD - H2O	1	KMEM
BH-11-0870		GROUND LIGHTS, 2 LED AT REAR BODY CORNERS - H2O	1	KMEM
		**** HEADER, BROW AND CAB RADIUS LIGHTS - CUSTOM CHASSIS	1	KMEM
		**** HEADER, TELESCOPING LIGHTS, REAR OF CAB - CUSTOM CHASSIS	1	KMEM
BH-12-2105	>	FRC BROW LIGHT, EVOLUTION II LED, 12V, (2) ABOVE WINDSHIELD	1	KMEM
BH-14-0020		CONTROL SWITCH IN CAB FOR LIGHT(S) ABOVE WINDSHIELD	1	KMEM
BH-20-0020		WIRE UPGRADE FOR 12V HIGH AMP LIGHTS - (2) BROW LIGHTS	1	KMEM
BI-00-0200		AERIAL BODY ELECTRICAL SYSTEM	1	KMEM
BI-00-0205		AERIAL BODY ELECTRICAL JUNCTION COMPARTMENT	1	KMEM
BI-00-0215		MID-MOUNT, AERIAL DEVICE ELECTRICAL JUNCTION COMPARTMENT	1	KMEM
BI-00-0525		BODY ELECTRICAL HARNESS - ES-KEY	1	KMEM
BJ-00-5115		PUMP ENCLOSURE WORK LIGHTS - TECNIQ LED	1	KMEM

PART NO	S	DESCRIPTION	QTY	ID
BJ-00-5165		ENGINE COMPARTMENT WORK LIGHTS - TECNIQ LED	1	KMEM
		COMPARTMENT LIGHTS - MID MOUNT TANDEM AXLE	1	KMEM
BJ-02-0450	>	COMPT. LIGHTS, AMDOR LUMA BAR LED LIGHTING - DUAL	11	KMEM
		**** CUSTOM MID MOUNT AERIAL NFPA WARNING LIGHT PACKAGE	1	KMEM
BL-95-0000		NFPA COMPLIANT WARNING LIGHT PACKAGE - ALL UNITS	1	KMEM
BL-95-0100		LIGHT PACKAGE ACTUATION/CONTROLS - ALL UNITS	1	KMEM
BL-98-0000		WARNING LIGHT FLASH PATTERN - NFPA FLASH PATTERN	1	KMEM
BM-00-0204		CODE 3 UPPER PACKAGE - CUSTOM MID MOUNT AERIAL	1	KMEM
BM-02-0086	>	A-UPPER, CODE 3 LED 2780NFPA P1, RX 2700 80" PRIZM II BAR	1	KMEM
BM-02-1055		C-UPPER, CODE 3 ARCH LED BEACONS - 180° SOLID COLOR	1	KMEM
BM-02-2000		B/D-UPPER REAR, COVERED BY LIGHTS IN ZONE C-UPPER	1	KMEM
BM-02-3000		B/D-UPPER FRONT, COVERED BY LIGHTS IN ZONE A-UPPER	1	KMEM
BM-07-0204		CODE 3 LOWER PACKAGE - CUSTOM MID MOUNT AERIAL	1	KMEM
BM-09-0018	>	A-LOWER FRONT, CODE 3 65 SERIES LED	1	KMEM
BM-09-0098		A-LOWER FRONT MOUNTING, CUSTOM CHASSIS	1	KMEM
BM-09-1014	>	C-LOWER REAR, CODE 3 65 SERIES LED	1	KMEM
BM-09-2006	>	B/D-LOWER FRONT, CODE 3 65 SERIES LED	1	KMEM
BM-09-2098		B/D-LOWER FRONT MOUNTING, CUSTOM CHASSIS	1	KMEM
BM-09-3006	>	B/D-LOWER MID, CODE 3 65 SERIES LED	1	KMEM
BM-09-3506	>	B/D-LOWER SECONDARY MID, CODE 3 65 SERIES LED	1	KMEM
BM-09-4006	>	B/D-LOWER REAR, CODE 3 65 SERIES LED	1	KMEM
BM-15-0000		LIGHT PACKAGE NFPA CERTIFICATION - ALL UNITS	1	KMEM
		**** HEADER, OPTIONAL WARNING LIGHTS	1	KMEM
		**** HEADER, AUDIBLE WARNING & COMMUNICATION EQUIPMENT	1	KMEM
BW-00-0510		CHASSIS SINGLE ELECTRIC (DOT) HORN	1	KMEM
BW-00-0560		CODE 3, #CA278, BACK-UP ALARM - 87DBA	1	KMEM
BW-00-5000	>	DUAL CHROME AIR HORNS	1	KMEM
BW-00-5100		DUAL AIR HORNS RECESSED IN FRONT BUMPER, STD	1	KMEM
BW-00-5200		AIR HORN CTRL - FOOT FOR OFFICER & STEERING WHEEL FOR DRIVER	1	KMEM
BW-01-0120		SIREN, WHELEN # 295HFS2, 100W - FLUSH MOUNT	1	KMEM
BW-01-1020		ONE (1) WHELEN SA315P SPEAKER	1	KMEM
BW-02-0000	>	FEDERAL Q2B SIREN @ CAB FRONT	1	KMEM
BW-02-0030		Q2B MOUNT - SEMI-RECESSED INTO DRIVER'S SIDE OF BUMPER	1	KMEM
BW-02-2020		SIREN CONTROL - STEERING WHEEL & OFFICER SIDE FLOOR	1	KMEM
		**** HEADER, PUMP, TANK & ACC, 100' PLAT 5-SECT, MM	1	KMEM
DC-00-2355		WATEROUS S100, 1500 GPM SINGLE STAGE PUMP - MID MOUNT	1	KMEM
DC-01-4630		WATEROUS S100 MECHANICAL PUMP SEAL	1	KMEM
DC-01-6211		WATEROUS "C20" DRIVE UNIT, WATEROUS MID-MOUNT (FRONT DRIVE)	1	KMEM
DC-01-6490		PUMP RATIO (HALE, WATEROUS OR DARLEY)	1	KMEM
DC-01-7140		WATEROUS AIR SHIFT	1	KMEM
DC-01-8615		WATEROUS PUMP SHIFT INDICATOR LIGHTS	1	KMEM
DC-01-9020		TRANSMISSION LOCK-UP (HALE, WATEROUS OR DARLEY)	1	KMEM
DC-02-1900		PUMP MOUNTS - MID-SHIP PUMPS	1	KMEM
DC-02-1990		PUMP INSTALLATION - CUSTOM	1	KMEM
DC-04-0120		MANIFOLD - DISCHARGE & SUCTION FOR 1250-2000 GPM INTERFACE PUMPING SYSTEM	1	KMEM
		**** HEADER, WATEROUS S100, PRESSURE CONTROL - MID MOUNT	1	KMEM
DC-05-1226		FIRE RESEARCH "IN CONTROL" TGA-400 PRESSURE GOVERNOR	1	KMEM
DC-05-1295		TASK FORCE TIPS #A18 SERIES INTAKE RELIEF VALVE	1	KMEM
DC-05-2500		PUMP UL CERTIFICATION - 750 GPM & UP	1	KMEM
		WATEROUS, PUMP PRIMING PUMP AND CONTROLS	1	KMEM
DC-05-3680	>	TRIDENT "MANUAL" AIR PRIMING SYSTEM	1	KMEM
		WATEROUS, DRAINS & ACCESSORES	1	KMEM
DC-05-5110		ROTARY MASTER DRAIN VALVE	1	KMEM
DC-05-5400		DRAINS/BLEEDER "INNOVATIVE CONTROLS" LIFT UP @ ALL 1-1/2" OR LARGER	1	KMEM
DC-05-5500		SYNFLEX SUCTION, DISCHARGE, PRESSURE AND CONTROL LINES	1	KMEM
DC-10-2020		SIDE MOUNT PUMP MODULE, MM AERIAL	1	KMEM
DC-10-2500		PUMP MODULE - STEEL CONSTRUCTION	1	KMEM
		**** HEADER, SUCTIONS - MIDMOUNT, SIDE MOUNT	1	KMEM

PART NO	S	DESCRIPTION	QTY	ID
DC-14-3330		WATEROUS MAIN SUCTION INLETS 6" NST, 1500 GPM S100 PUMP	1	KMEM
DC-14-5300		SHORT NECK MAIN PUMP SUCTION INLETS - DS & OS	1	KMEM
DC-14-5560	>	6" NST MAIN PUMP SUCTION PRESSURE VENTED CAPS (2)	1	KMEM
		HEADER - AUXILIARY SUCTION/S - AERIALS	1	KMEM
DC-20-1000		2 1/2" AUX. SIDE SUCTION @ DS PANEL TO REAR OF MAIN INLET	1	KMEM
DC-20-1100		2 1/2" AKRON #8800 S.S. BALL VALVE, DS REAR AUX SUCTION	1	KMEM
DC-20-1200		SWING CONTROL @ VALVE, DS REAR AUX SUCTION	1	KMEM
DC-20-9500		BEHIND PANEL MOUNT	1	KMEM
		**** HEADER - TANK TO PUMP - MID-MOUNTS	1	KMEM
DC-25-1200		TANK TO PUMP - 3" VALVE - LADDERS & PLATFORMS	1	KMEM
DC-25-3110		3" AKRON #8800 SERIES - S.S. BALL, VALVE , TANK TO PUMP	1	KMEM
DC-25-5110		3" PUSH/PULL CONTROL FOR TANK TO PUMP	1	KMEM
		**** HEADER - TANK FILL - MID-MOUNTS	1	KMEM
DC-30-2100		TANK FILL LINE 2" FROM PUMP - SIDE MOUNT	1	KMEM
DC-30-2300		2" AKRON #8800 SERIES - S.S. BALL TANK FILL, SIDE MOUN	1	KMEM
DC-30-6500		PUSH/PULL CONTROL FOR TANK FILL	1	KMEM
		**** DISCHARGES & ACCESSORIES, MID MOUNT AERIAL - SIDE MOUNT	1	KMEM
		DRIVER'S SIDE #1 MAIN DISCHARGE	1	KMEM
DC-35-0010		DS MAIN DISCHARGE #1 - SIDE MOUNT	1	KMEM
DC-35-0110		2 1/2" AKRON #8800 SERIES - S.S. BALL, DS #1, SIDE MOUNT	1	KMEM
DC-35-1815		DS #1 DISCH - 2 1/2" STRAIGHT NST & 30-DEGREE NST ELBOW	1	KMEM
DC-35-2010		2 1/2" NST PRESSURE VENTED CAP - DS DISCHARGE #1	1	KMEM
DC-35-2410		PUSH/PULL CONTROL FOR DS DISCHARGE #1 -SIDE MOUNT	1	KMEM
DC-35-3110		INNOVATIVE CONTROLS LIQUID FILLED 2 1/2" PRESS GAUGE SS- DS DISCHARGE #1	1	KMEM
		DRIVER'S SIDE #2 MAIN DISCHARGE	1	KMEM
DC-35-5010		DS MAIN DISCHARGE #2 - SIDE MOUNT	1	KMEM
DC-35-5110		2 1/2" AKRON #8800 SERIES - S.S. BALL, DS #2, SIDE MOUNT	1	KMEM
DC-35-6815		DS #2 DISCH - 2 1/2" STRAIGHT NST & 30-DEGREE NST ELBOW	1	KMEM
DC-35-7010		2 1/2" NST PRESSURE VENTED CAP - DS DISCHARGE #2	1	KMEM
DC-35-7410		PUSH/PULL CONTROL FOR DS DISCHARGE #2 -SIDE MOUNT	1	KMEM
DC-35-8110		INNOVATIVE CONTROLS LIQUID FILLED 2 1/2" PRESS GAUGE SS- DS DISCHARGE #2	1	KMEM
		OFFICER'S SIDE #1 MAIN DISCHARGE	1	KMEM
DC-39-0010	>	OS MAIN DISCHARGE #1 - SIDE MOUNT	1	KMEM
DC-39-0110		2 1/2" AKRON #8800 SERIES - S.S. BALL, OS #1, SIDE MOUNT	1	KMEM
DC-39-1815		OS #1 DISCH - 2 1/2" STRAIGHT NST & 30-DEGREE NST ELBOW	1	KMEM
DC-39-2010		2 1/2" NST PRESSURE VENTED CAP - OS DISCHARGE #1	1	KMEM
DC-39-2410		PUSH/PULL CONTROL FOR OS DISCHARGE #1 -SIDE MOUNT	1	KMEM
DC-39-3110		INNOVATIVE CONTROLS LIQUID FILLED 2 1/2" PRESS GAUGE SS- OS DISCHARGE #1	1	KMEM
		OFFICER'S SIDE #2 MAIN DISCHARGE	1	KMEM
DC-39-5010	>	OS MAIN DISCHARGE #2 - SIDE MOUNT	1	KMEM
DC-39-5130	>	4" AKRON #8840 VALVE, OS #2, SIDE MOUNT	1	KMEM
DC-39-6865	>	OS #2 DISCH - 4" STRAIGHT NST	1	KMEM
DC-39-7045		DELETE 4" NST CAP - OS DISCHARGE #2	1	KMEM
DC-39-7315		4" NSTF X 4" STORZ KOCHEK SKE-R 30° ADAPTER WITH CAP OS	1	KMEM
DC-39-7810	>	AKRON HANDWHEEL GEAR VALVE CONTROL, OS DISCHARGE #2	1	KMEM
DC-39-8110		INNOVATIVE CONTROLS LIQUID FILLED 2 1/2" PRESS GAUGE SS- OS DISCHARGE #2	1	KMEM
		CROSSLAY #1 DISCHARGE	1	KMEM
DC-47-0400		CROSSLAY #1, 1 1/2" - AERIAL	1	KMEM
DC-47-1110		CROSSLAY #1 CAPACITY - 200' OF 1 3/4" HOSE	1	KMEM
DC-47-1410		CROSSLAY #1 - DOUBLE STACK HOSE DESIGN	1	KMEM
DC-47-1510		1 1/2" NST CHICKSAN SWIVEL - CROSSLAY #1	1	KMEM
DC-47-2110		CROSSLAY #1, PLUMBING, 2" STAINLESS STEEL PIPING	1	KMEM
DC-47-2210		2" AKRON #8800 SERIES - S.S. BALL, VALVE CROSSLAY #1, DISCH	1	KMEM
DC-47-2610		PUSH/PULL 1/4 TURN CONTROL CROSSLAY #1	1	KMEM
DC-47-3210		INNOVATIVE CONTROLS LIQUID FILLED 2 1/2" PRESS GAUGE SS - CROSSLAY #1	1	KMEM

PART NO	S	DESCRIPTION	QTY	ID
		CROSSLAY #2 DISCHARGE	1	KMEM
DC-47-5400		CROSSLAY #2, 1 1/2" - AERIAL	1	KMEM
DC-47-6110		CROSSLAY #2 CAPACITY - 200' OF 1 3/4" HOSE	1	KMEM
DC-47-6410		CROSSLAY #2 - DOUBLE STACK HOSE DESIGN	1	KMEM
DC-47-6510		1 1/2" NST CHICKSAN SWIVEL - CROSSLAY #2	1	KMEM
DC-47-7110		CROSSLAY #2, PLUMBING, 2" STAINLESS STEEL PIPING	1	KMEM
DC-47-7210		2" AKRON #8800 SERIES - S.S. BALL, VALVE CROSSLAY #2,	1	KMEM
DC-47-7610		PUSH/PULL 1/4 TURN CONTROL CROSSLAY #2	1	KMEM
DC-47-8210		INNOVATIVE CONTROLS LIQUID FILLED 2 1/2" PRESS GAUGE SS - CROSSLAY #2	1	KMEM
		CROSSLAY OPTIONS - MM AERIAL	1	KMEM
DC-50-7015	>	VINYL CROSS LAY COVER	1	KMEM
DC-50-7030		CROSSLAY COVER RED IN COLOR	1	KMEM
	>	WATERWAY DISCHARGE	1	KMEM
DC-62-0225		AERIAL WATERWAY DISCHARGE - MM AERIAL	1	KMEM
DC-62-1150		WATERWAY DISCHARGE, PLUMBING, 5" STAINLESS STEEL - MM	1	KMEM
DC-62-1240		4" AKRON #8840 SERIES VALVE, WATERWAY	1	KMEM
DC-62-1760		4" AKRON #9323 ELECTRIC VALVE CONTROL FOR WATERWAY	1	KMEM
DC-62-2210		INNOVATIVE CONTROLS LIQUID FILLED 2 1/2" PRESS GAUGE SS - WATERWAY	1	KMEM
		PUMP PANELS & ACCESSORIES	1	KMEM
DD-65-0510		SIDE MOUNT PUMP PANEL - MID-MOUNT	1	KMEM
DD-65-4115		SIDE MOUNT PANELS - 12 GAUGE BRUSHED STAINLESS STEEL	1	KMEM
DD-65-4715		HORIZONTALLY HINGED GAUGE PANEL - MID-MOUNT	1	KMEM
DD-65-4810		OFFICER SIDE VERTICALLY HINGED PUMP ACCESS DOOR - SIDE MOUNT	1	KMEM
DD-65-4820		PUMP ACCESS DOORS - MID-MOUNT	1	KMEM
DD-65-5150		PANEL FASTENERS	1	KMEM
DD-65-5510		CAPS AND ADAPTERS SAFETY TETHER - BALL CHAIN	1	KMEM
DD-65-8820		PUMP PANEL DISCH./SUCTION TRIM PLATES, HIGH POLISHED	1	KMEM
DD-65-9000		DISCHARGE GAUGE TRIM BEZELS	1	KMEM
DD-65-9110		IDENTIFICATION PLATES	1	KMEM
DD-66-0300		PUMP OPERATOR'S PANEL LIGHT SHIELD - MID-MOUNT	1	KMEM
DD-66-0310		AMDOR LUMA BAR H2O SUPER BRIGHT LED - MID-MOUNT	1	KMEM
DD-66-2200		OS PUMP PANEL LIGHT SHIELD	1	KMEM
DD-66-2210		AMDOR LUMA BAR H2O SUPER BRIGHT LED - LIGHT SHIELD	1	KMEM
		PUMP OPERATOR'S PANEL - SIDE MOUNT, AERIAL - MID MOUNT	1	KMEM
DD-70-2335		FIRE RESEARCH "IN CONTROL" PRESSURE GOVERNOR CONTROL @ PANEL	1	KMEM
DD-70-2410		PUMP PRESSURE & VACUUM TEST PORTS @ PANEL	1	KMEM
DD-70-4120		MASTER PRESSURE & COMPOUND GAUGES - 4" NOMINAL GAUGES	1	KMEM
DD-70-4130		**** CONSIDER DELETING MASTER GAUGES - IN GOVERNOR DISPLAY ****	1	KMEM
DD-70-4220		4" INNOVATIVE CONTROLS MASTER PRESSURE AND COMPOUND GAUGES	1	KMEM
DD-70-4680		PRESSURE & COMPOUND GAUGE RANGES - SINGLE STAGE	1	KMEM
DD-70-4900		AUXILIARY ENGINE COOLER	1	KMEM
		WATER TANK LEVEL GAUGE - AERIAL, MID-MOUNT	1	KMEM
DD-72-0410		FIRE RES - TANK VISION #WLA300-A00 LED WATER TANK GAUGE - PRIMARY	1	KMEM
DD-72-1300	>	FIRE RES WATER LEVEL - 1/4" NPT PRESS TRANS @ BOTTOM TANK	1	KMEM
DD-80-0110		SLIDE-OUT STEP @ DRIVER'S PUMP OPERATOR'S PANEL	1	KMEM
DE-00-1070	>	**** HEADER, MM PLATFORMS, WATER TANK	1	KMEM
		WATER TANKS/OPTIONS AERIALS	1	KMEM
DE-05-1700	>	UPF POLYIIE TANK, 300 GAL. - AERIAL	1	KMEM
DE-05-6000		TANK DESCRIPT, CONSTR AND MOUNT, UPF POLY IIE TANK	1	KMEM
JA-00-0100		BODY AND COMPARTMENT HEADER (ALL AERIAL DEVICES)	1	KMEM
JA-00-5070		GENERAL BODY DESCRIPT, MID-MOUNT, 100' PLATFORMS	1	KMEM
TF-08-0800	>	ANY MID-MOUNT, TURNTABLE COMPTS, LH & RH SIDE, LOW BODY	1	KMEM
TF-08-6000	>	COMPARTMENTATION, 100-5-MM STYLE #1H-LO	1	KMEM
		**** HEADER, MM BODY OPTIONS (WITH PUMP)	1	KMEM
TF-10-0100		BEVELED OVERLAPPING DOORS, ALL COMPARTMENTS, ALL DEVICES	1	KMEM
TF-10-1900		BRUSHED FINISHED DOOR PANS - 2" THICK DOORS	1	KMEM

PART NO	S	DESCRIPTION	QTY	ID
TF-10-2700		DOOR HINGE FOR BEVELED OVERLAPPING HINGED DOORS	1	KMEM
TF-10-2800		DOOR SEAL FOR BEVELED OVERLAPPING HINGED DOORS	1	KMEM
TF-10-2940		ROTARY LATCHES WITH D-RING HANDLES	1	KMEM
TF-10-3150		GAS SHOCK ON HORIZONTALLY & VERTICALLY HINGED DOORS	1	KMEM
TF-10-6000		COMPARTMENT FLOORS (AERIALS ONLY)	1	KMEM
TF-11-0500		COMPARTMENT GENERAL DESCRIPTION, ALL LADDERS & PLATFORMS	1	KMEM
TF-11-1460		PAINTED REAR BODY PANEL, MID-MOUNTS	1	KMEM
TF-11-2285		1/2 WIDTH S. S. OUTRIGGER COVER PANELS, FOUR RIGGER DEVICES	1	KMEM
TF-11-3000		BODY RUB RAILS, 1" X 1" EXTRUSION	1	KMEM
TF-12-1000		RUNNING BOARD STEPS (AERIALS ONLY)	1	KMEM
TF-13-3085		TURNTABLE BODY MODULE, MID MOUNT PLATFORM	1	KMEM
TF-13-3200		MID-MOUNT, TURNTABLE LADDERS	1	KMEM
TF-13-3250		MID-MOUNT, PLATFORM ACCESS LADDER, DRIVER SIDE OF APPARATUS	1	KMEM
TF-13-5040		MID-MOUNT PLATFORM, BODY HANDRAILS, EXTRUDED ALUMINUM	1	KMEM
TF-14-1000		ALUMINUM WHEEL WELL LINERS	1	KMEM
TF-14-1710		POLISHED ALUMINUM FENDERETTES, TANDEM AXLE BODIES	1	KMEM
TF-14-3010		SIX (6) SCBA BOTTLE STORAGE COMPARTMENTS, TANDEM BODIES	1	KMEM
TF-14-5000		REAR MUD FLAPS	1	KMEM
TF-14-6500		PAINTED REAR TOW EYES, THROUGH REAR SHEET	1	KMEM
TF-15-1150		HOSE BED, MID-MOUNT AERIALS	1	KMEM
TF-15-1900		ALUMINUM HOSE BED FLOORING - AERIAL	1	KMEM
TF-15-3110		HOSE BED COVER, VINYL WITH QTR TURNS	1	KMEM
TF-15-3190		HYPALON MATERIAL RED IN COLOR	1	KMEM
		**** HEADER, COMPARTMENT ACCESSORIES - MIDMOUNTS	1	KMEM
TJ-05-1005		ADJUSTABLE SHELF DESCRIPTION - MIDMOUNT	1	KMEM
TJ-05-2000	>	(AUTO QTY) ADJUSTABLE SHELF(S), MOUNTED AS DIRECTED	10	KMEM
TJ-15-4010		500#, FLOOR MOUNTED, ROLLOUT TRAY DESC. 100% - MIDMOUNT	1	KMEM
TJ-16-2000	>	(AUTO QTY) ROLLOUT TRAY(S), MOUNTED AS DIRECTED - 100%	4	KMEM
TJ-25-1005		ROLLOUT / DROP DOWN ADJUSTABLE TRAY - MIDMOUNT	1	KMEM
TJ-25-2000	>	(AUTO QTY) ROLLOUT DROP DOWN TRAY(S), MOUNTED AS DIRECTED	4	KMEM
		**** HEADER, MM WITH PUMP 120/240 VOLT AC ELEC & GEN	1	KMEM
TL-03-0000		120/240 VOLT ELECTRICAL SYSTEM TESTING	1	KMEM
TL-05-2010		SMART POWER PTO/HYD GEN, HR-8 SERIES, 8000 WATT	1	KMEM
TL-05-2900		SMART POWER HOT SHIFT PTO	1	KMEM
TL-05-7100		WARRANTY - SMART POWER HR 6-30 PTO/HYD GENERATORS	1	KMEM
TL-08-9990		UL LINE VOLTAGE TESTING	1	KMEM
TL-09-2025	>	GEN LOCATION OFFICER SIDE BELOW PUMP - MM W/PUMP	1	KMEM
TL-10-1100	>	TWELVE (12) SPACE, 125 AMP MAIN LUG LOAD CENTER	1	KMEM
TL-10-2045		TEN (10) STANDARD BREAKERS	1	KMEM
TL-10-5040	>	LOCATE BREAKER PANEL DRIVER SIDE FRONT COMPARTMENT	1	KMEM
TL-15-1000		120 & 240 VOLT WIRING METHODS	1	KMEM
		**** HEADER, CORD REELS	1	KMEM
TL-20-1310		TWO (2) HANNAY #ECR-1618-17-18, 120 VOLT ELECTRIC CORD REEL	1	KMEM
TL-20-2120		CORD REEL LOCATION DS & OS FRONT COMPARTMENT	1	KMEM
TL-20-2400		CIRCUIT BREAKER REQUIREMENTS FOR CORD REELS	1	KMEM
TL-20-2455		REWIND SWITCH - ON COMPARTMENT WALL	1	KMEM
TL-20-2510	>	STAINLESS STEEL, 4 WAY ROLLER ASSEMBLY	1	KMEM
TL-20-2550		BALL STOP ON END OF CABLE	1	KMEM
TL-20-2755		200' OF 10/3 YELLOW CABLE FOR TWO (2) 120 VOLT REELS	1	KMEM
TL-20-4620	>	AKRON (15 TWIST) ELECTRICAL JUNCTION BOX ON END OF CABLE	2	KMEM
		**** HEADER, 120/240V FLOOD LIGHTS MM WITH PUMP	1	KMEM
		**** PORTABLE LIGHTS, DRIVER SIDE OF BODY ****	1	KMEM
TL-23-5430		FIRE RESEARCH, #SPAKR700, PORTABLE LIGHTS, DRIVER SIDE OF BODY	1	KMEM
TL-23-5520		SPECTRA MAX PORTABLE LIGHTS, LIGHTHEADS	1	KMEM
TL-23-6700		SWITCHING LOCATION(S) FOR DRIVER SIDE OF BODY PORTABLE LIGHTS	1	KMEM
TL-23-6740		DRIVER SIDE PORTABLE LIGHTS SWITCHED FROM BREAKER PANEL	1	KMEM
		**** PORTABLE LIGHTS, OFFICER SIDE OF BODY ****	1	KMEM
TL-23-7130		FIRE RESEARCH, #SPAKR700, PORTABLE LIGHTS, OFFICER SIDE OF BODY	1	KMEM
TL-23-7220		SPECTRA MAX PORTABLE LIGHTS, LIGHTHEADS	1	KMEM
TL-23-8400		SWITCHING LOCATION(S) FOR OFFICER SIDE OF BODY PORTABLE LIGHTS	1	KMEM

PART NO	S	DESCRIPTION	QTY	ID
TL-23-8440		OFFICER SIDE PORTABLE LIGHTS SWITCHED FROM BREAKER PANEL	1	KMEM
	>	"NOTE" READ THIS BEFORE ADDING ANY ADDITIONAL GROUND LADDERS	1	KMEM
		**** HEADER, 100-5-MM-PL GROUND LADDERS	1	KMEM
TN-00-5090	>	CENTER LADDER STORAGE, 100-5-MM-PL	1	KMEM
TN-00-7030		HINGED PAINTED DOORS, LADDER STORAGE, MID-MOUNTS ONLY	1	KMEM
TN-01-0870		ALCO-LITE LADDER COMP, 100-5-MM-PL	1	KMEM
TN-02-1150		ALCO-LITE PEL-35 35' 2-SECTION EXTENSION LADDER (ALUM)	1	KMEM
TN-02-1170		ALCO-LITE PEL-24 24' 2-SECTION EXTENSION LADDER (ALUM)	1	KMEM
TN-02-2510		ALCO-LITE PRL-16 16' ROOF LADDER W/FOLDING HOOKS (ALUM)	2	KMEM
TN-02-7000		ALCO-LITE AEL-14 14' ATTIC EXTENSION LADDER (ALUM)	1	KMEM
TN-02-8010		ALCO-LITE FL-10 10' FOLDING ATTIC LADDER (ALUM)	1	KMEM
		**** HEADER, PIKE POLES & HOLDERS - AERIALS	1	KMEM
TN-10-0500	>	PIKE POLE TUBE(S) - AERIALS	6	KMEM
TN-20-0000		ADDITIONAL ITEMS SHIPPED WITH VEHICLE, ALL AERIAL DEVICES	1	KMEM
		**** HEADER, 100' PLATFORM, MID-MOUNT 5-SECTION	1	KMEM
TQ-00-1500		100' PLATFORM, MID-MOUNT 5-SECT GEN, INTENT & DESIGN STANDAR	1	KMEM
TQ-00-3005		MOUNTING OF AERIAL, MID-MOUNTS	1	KMEM
TQ-00-3420		HEIGHT AND REACH, 100' 5-SECT. MM PLATFORM	1	KMEM
TQ-00-4000		MATERIAL STANDARDS, ALL DEVICES	1	KMEM
TQ-00-5055		100' PLATFORM, MID-MOUNT 5-SECT. HYDRAULIC SYSTEM	1	KMEM
TQ-00-5130		PARKER HOSE KIT - 4 JACK UNIT MID MOUNT	1	KMEM
TQ-00-6120		HYDRAULIC PUMP - PRESSURE COMPENSATED	1	KMEM
TQ-00-7030		HYDRAULIC RESERVOIR - MID MOUNT	1	KMEM
TQ-00-7070		HYDRAULIC OIL - REGULAR - A/W 46 - 120 GAL	1	KMEM
TQ-00-7115		DIVERTER VALVE, MID-MOUNT DEVICES	1	KMEM
TQ-00-7230		OUTRIGGER HYDRAULIC CONTROL VALVE - MM, PROPORTIONAL	1	KMEM
TQ-00-7460		ELECTRIC TURNTABLE HYDRAULIC CONTROL VALVE, MM PLATFORM	1	KMEM
TQ-00-7505		HYDRAULIC SYSTEM FILTRATION	1	KMEM
TQ-00-8550		MID-MOUNT PLATFORM, "IQAN" MOTION CONTROL SYSTEM - ELECTRIC CONTROLS @ TT	1	KMEM
TQ-00-8700		HYDRAULIC PUMP PRESSURE - DISPLAY	1	KMEM
TQ-00-8710		ELEVATION ANGLE OF LADDER - DISPLAY	1	KMEM
TQ-00-8715		VERTICAL HEIGHT OF LADDER - DISPLAY	1	KMEM
TQ-00-8725		DEGREE OF ROTATION FROM VEHICLE CENTERLINE - DISPLAY	1	KMEM
TQ-00-8730		E-ZONE CAB & BODY AVOIDANCE WARNING - DISPLAY	1	KMEM
TQ-00-8735		E-ZONE SHORT JACK WARNING - DISPLAY	1	KMEM
TQ-00-8740		CRADLE ALIGNMENT MESSAGE - DISPLAY	1	KMEM
TQ-00-8745		BREATHING AIR LEVEL MONITORING - DISPLAY	1	KMEM
TQ-00-8750		DEVICE LOAD MONITORING - DISPLAY	1	KMEM
TQ-00-8760		E-SPEED LADDER TIP SPEED CONTROL - DISPLAY	1	KMEM
TQ-00-8765		E-CUSH RAMP CONTROL FOR ELEVATION - DISPLAY	1	KMEM
TQ-00-8770		E-CUSH RAMP CONTROL FOR EXTENSION & RETRACTION - DISPLAY	1	KMEM
TQ-00-8895		WARNING MESSAGES - TURNTABLE & PLATFORM	1	KMEM
TQ-00-9555		100' PLATFORM, MID-MOUNT 5-SECT. EMERG HYD. PUMP, EPU	1	KMEM
TQ-01-1000		HOT SHIFT PTO W/CONTROLS IN CAB	1	KMEM
TQ-01-1100		FAST IDLE CONTROL FOR ALL AERIAL DEVICES	1	KMEM
TQ-02-0225		100' PLATFORM, MID-MOUNT 5-SECTION TORQUE BOX	1	KMEM
TQ-02-1225		100' PLATFORM, MID-MOUNT 5-SECTION OUTRIGGERS	1	KMEM
TQ-02-1725		100' PLAT, MID-MOUNT 5-SECT OUTRIGGERS - HORIZONTAL CYLINDER	1	KMEM
TQ-02-1925		100' PLAT, MID-MOUNT 5-SECT OUTRIGGERS - VERTICAL CYLINDERS	1	KMEM
TQ-02-2110		IQAN - OUTRIGGER STRING POTENTIOMETER - FOUR (4) OUTRIGGERS	1	KMEM
TQ-02-2200		OUTRIGGER/JACK FOOT PADS, FOUR (4) JACK DEVICES	1	KMEM
TQ-02-2350		AUXILARY JACK PADS, FOUR (4) 24" X 24" x 1" POLY	1	KMEM
TQ-02-2500		OUTRIGGER INTERLOCK SYSTEM & ALARM, ALL DEVICES	1	KMEM
		**** HEADER - OUTRIGGER LIGHTING, FOUR (4) OUTRIGGERS	1	KMEM
TQ-02-5145		AKRON LED OUTRIGGER LAMPS, 4-OUTRIGGERS	1	KMEM
TQ-02-5225		LED OUTRIGGER GROUND LIGHTS - GROTE WHITELIGHT, 4-OUTRIGGERS	1	KMEM
TQ-02-5275		OUTRIGGER WARNING LIGHTS FROM LIGHT PACKAGE	1	KMEM
TQ-02-6000		OUTRIGGER WARNING LIGHT ACTIVATION, LADDER POWER	1	KMEM
TQ-02-6800		OUTRIGGER SCOTCHLITE, WHITE	1	KMEM

PART NO	S	DESCRIPTION	QTY	ID
TQ-02-7300		PLATFORM, MID-MOUNT TETHER OUTRIGGER CONTROLS	1	KMEM
TQ-02-9220		OUTRIGGER LEVELS MID-MOUNT DEVICES; TWO (2)	1	KMEM
TQ-03-1400		100' PLATFORM, MID-MOUNT 5-SECTION TURNTABLE	1	KMEM
TQ-03-3010		TURNTABLE DECK - ALUMINUM TREADPLATE	1	KMEM
TQ-04-1850		HEEL PIN STEP ON TURNTABLE, APPLICABLE DEVICES	1	KMEM
TQ-04-1860		TURNTABLE HANDRAILS, KNURLED ALUMINUM, MID-MOUNTS	1	KMEM
TQ-04-2130		HEEL PIN - 100' HD MM LADDER & 81', 95', 100' MM PLAT	1	KMEM
TQ-04-2250		TURNTABLE RETENTION BOLTS, APPLICABLE DEVICES	1	KMEM
TQ-04-2300		STAINLESS STEEL CRADLE ALIGNMENT ARROWS ON TURNTABLE	1	KMEM
TQ-04-2810		SAFETY CHAINS BETWEEN TURNTABLE HANDRAIL, MID-MOUNTS	1	KMEM
TQ-04-7300		100' PLATFORM, MID-MOUNT 5-SECTION 5" TURNTABLE SWIVEL	1	KMEM
TQ-04-9000		IQAN - SWIVEL ROTATION ENCODER	1	KMEM
TQ-06-0460		100' PLATFORM, MID-MOUNT 5-SECT, LADDER CONSTRUCTION	1	KMEM
TQ-06-1850		100' PLATFORM 5-SECT MM, LADDER DIMENSIONS	1	KMEM
TQ-06-3000		RUNG COVERS - PHOTOLUMINESCENT, ALL DEVICES	1	KMEM
TQ-06-9000		AERIAL TRAVEL SUPPORT, ALL DEVICES	1	KMEM
TQ-06-9035		CRADLE ILLUMINATION LIGHTS - GROTE WHITELIGHT LED	1	KMEM
TQ-07-1500		100' PLATFORM, MID-MOUNT 5-SECT, ELEVATION SYSTEM	1	KMEM
TQ-07-2800		IQAN - INCLINOMETER	1	KMEM
TQ-07-2801		IQAN - MOMENT LOAD INDICATOR	1	KMEM
TQ-07-2815		IQAN - E-CUSH CONTROL, ELEVATION SYSTEM - PLATFORM & TURNTABLE	1	KMEM
TQ-07-3020		IQAN LOAD METER TURNTABLE & PLATFORM	1	KMEM
TQ-08-1500		100' PLATFORM, MID-MOUNT 5-SECT, ROTATION SYSTEM	1	KMEM
TQ-08-2820		ROTATION MOTOR AND BRAKE - 48" INTERNAL BEARINGS	1	KMEM
TQ-08-3050		IQAN - "E-SPEED" SAFETY SYSTEM, PLATFORM & TURNTABLE	1	KMEM
TQ-08-3110		IQAN - "E-ZONE" ROTATION SAFETY SYSTEM, 4-OUTRIGGERS	1	KMEM
TQ-08-3680		IQAN - "E-ZONE" CAB & BODY PROXIMITY SYSTEM - PLATFORM & TURNTABLE	1	KMEM
TQ-09-1500		100' PLATFORM, MID-MOUNT 5-SECT, EXTENSION/RETRACTION SYSTEM	1	KMEM
TQ-09-2350		EXTENSION CYLINDERS PAINTED LADDER PAINT COLOR	1	KMEM
TQ-09-2800		IQAN - EXTENSION SYSTEM STRING POTENTIOMETER	1	KMEM
TQ-09-2815		IQAN - "E-CUSH" EXTENSION/RETRACTION SYSTEM - PLATFORM & TURNTABLE	1	KMEM
TQ-09-3000		LADDER SLIDE PADS, ALL DEVICES	1	KMEM
		LADDER EXTENSION NUMBERS, ALL DEVICES	1	KMEM
TQ-09-3150		LADDER LEVEL INDICATOR (BASE SECTION) - LIGHTED	1	KMEM
TQ-09-3340		PLATFORM, CABLE/HOSE/WIRE ROUTING, 5-SECTIONS	1	KMEM
		**** 2010 - MID MOUNT PLATFORM CONSTRUCTION - OPTIONS ****	1	KMEM
TQ-09-6060		PLATFORM STRUCTURE FINISH - PAINTED TO MATCH LADDER COLOR	1	KMEM
TQ-09-6100		PLATFORM DOORS, HINGED @ REAR, LATCHED @ FRONT SELF CLOSE	1	KMEM
TQ-09-6200		PLATFORM, REAR ACCESS LADDER AND REAR GATE	1	KMEM
TQ-09-6210		MID MOUNT PLATFORM, REAR REAR ENTRY GATE	1	KMEM
TQ-09-7100		PLATFORM FLOOR	1	KMEM
TQ-09-7200		PLATFORM MOUNT	1	KMEM
TQ-09-7300		PLATFORM LEVELING SYSTEM	1	KMEM
TQ-09-8000		PLATFORM BOTTOM HEAT SHIELDS, .09" TREAD PLATE	1	KMEM
TQ-09-8100		PLATFORM EXT. HEAT SHIELDS, .09" PAINTED ALUMINUM	1	KMEM
TQ-09-8200		PLATFORM SAFETY BELT LOOPS AND EXTERIOR LIFTING POINTS	1	KMEM
TQ-10-2810		LADDER WALKWAY ILLUMINATION LIGHTS, 5-SECT LADDER	1	KMEM
TQ-10-2850		RED - LADDER ILLUMINATION LIGHTS	1	KMEM
		**** HEADER - PLATFORM 120 VOLT ELECTRICAL SYSTEM & ACCESSORIES	1	KMEM
TQ-11-3001		PLAT, 120 VOLT ELECTRICAL SYSTEM	1	KMEM
TQ-11-3005		PLAT, TWO (2) 120 VOLT NEMA 5-15R RECEPTACLES IN PLATFORM	1	KMEM
TQ-11-3260		PLAT, FIRE RESEARCH 215 WATT, SPA540-K20 LIGHTS REAR OF PLATFORM	1	KMEM
TQ-11-5045		NO 120V LIGHTS REQUIRED ON FRONT OF PLATFORM	1	KMEM
TQ-11-5130		PLAT, FIRE RESEARCH RECESSED 155 WATT LIGHT BOTTOM OF PLATFORM	1	KMEM

PART NO	S	DESCRIPTION	QTY	ID
TQ-11-5650		NO 120V LIGHTS REQUIRED ON SIDES OF PLATFORM	1	KMEM
		**** HEADER - PLATFORM, 12 VOLT ELECTRICAL SYSTEM & ACCESSORIES	1	KMEM
TQ-11-6020		HEEL PIN STEP LIGHTS - TECNIQ EON 3 LED LIGHTS	1	KMEM
TQ-11-6059		TURNTABLE CONSOLE STEP LIGHT - TECNIQ EON 3 LED	1	KMEM
TQ-11-6075		PLATFORM CONSOLE STEP LIGHT - TECNIQ EON 3 LED LIGHT	1	KMEM
TQ-11-6080		TURNTABLE & PLATFORM CONTROL CONSOLE LIGHTING - LUMA BAR LED H2O	1	KMEM
TQ-11-6120		RED LED MARKER LIGHTS - PLATFORM	1	KMEM
TQ-11-6212		TWO (2) UNITY LED SPOTS @ LADDER BASE SECTION	1	KMEM
TQ-11-6335		TWO (2) UNITY LED SPOT LIGHTS @ PLATFORM	1	KMEM
TQ-11-8060		PLATFORM WARNING LIGHTS, CODE 3 65 SERIES LED	1	KMEM
TQ-11-8900		3 IN 1 PLATFORM ATTACHMENT (ROOF LADDER, STOKES AND LIFTING)	1	KMEM
TQ-12-1000		PLATFORM, CONTROL STATIONS	1	KMEM
TQ-12-1080		MM PLATFORM, CONSOLE LOCATED @ LH SIDE OF TURNTABLE, STD	1	KMEM
TQ-12-1095		PAINTED ALUMINUM TURNTABLE CONSOLE - MATCH LADDER COLOR	1	KMEM
TQ-12-1550		100' PLATFORM, MID-MOUNT 5-SECT. TURNTABLE CONTROL STATION	1	KMEM
TQ-12-2520		FIRE RESEARCH INSIGHT FLOWMETER @ TURNTABLE CONSOLE	1	KMEM
TQ-12-2595		TURNTABLE CONSOLE COVER - PAINTED RADIUS	1	KMEM
TQ-12-6000		IQAN - MULIT-PLEX CONTROLLERS FOR PLATFORM	1	KMEM
TQ-12-6610		PLATFORM CONTROL STATION, RIGHT REAR OF PLATFORM	1	KMEM
TQ-12-6635		IQAN - MDM III DISPLAY @ PLATFORM CONTROL STATION	1	KMEM
TQ-12-6850		100' PLATFORM, MID-MOUNT 5-SECTION PLATFORM CONTROL STATION	1	KMEM
TQ-12-7100		PAINTED COVER FOR PLATFORM CONTROLLERS	1	KMEM
TQ-14-2200		PLATFORM, FIRE RESEARCH 2-WAY COMMUNICATION SYSTEM - LOWER CONTROL	1	KMEM
TQ-14-2205		PLATFORM, FIRE RESEARCH 2-WAY COMMUNICATION SYSTEM - UPPER SPEAKER/MIC	1	KMEM
TQ-15-0010		LADDER ANGLE INDICATOR (FLY SECTION) - LIGHTED	1	KMEM
TQ-16-1500		100' PLAT, MID-MOUNT 5-SECT BREATHING AIR SYSTEM, 4500 PSI-2	1	KMEM
TQ-16-2500		BREATHING AIR BOTTLE/S PAINTED YELLOW #81485	1	KMEM
TQ-16-3000		50' BREATHING AIR SYSTEM REFILL HOSE, ALL DEVICES W/AIR	1	KMEM
TQ-16-3095		HANSEN TYPE AIR COUPLINGS, ALL LOCATIONS, ALL DEVICES	1	KMEM
TQ-16-3510		IQAN - LOW AIR WARNING SYSTEM ALARM, PLATFORM	1	KMEM
TQ-18-0550		100' PLATFORM, M-M, 5-SECTION WATERWAY SYSTEM	1	KMEM
TQ-18-1240		100' PLATFORM, M-M, 5-SECTION WATERWAY	1	KMEM
TQ-18-2560		5" HEEL PIN SWIVEL - S-PIPES, -12 TO 80 DEGREES	1	KMEM
TQ-18-2600		AUTOMATIC WATER DRAIN/VENT	1	KMEM
TQ-18-3000		ALL DEVICES, WATERWAY RELIEF VALVE	1	KMEM
TQ-18-3020		MID-MOUNT AERIAL WATERWAY DRAIN, 1 1/2" VALVE	1	KMEM
TQ-18-5050		5-SECTION PLATFORM, PLATFORM WATERWAY SYSTEM, SINGLE GUN	1	KMEM
TQ-18-5100		SHOWER NOZZLE UNDER PLATFORM (MANUAL)	1	KMEM
		PLATFORM MANUAL TFT VALVE UNDER MONITOR - SINGLE	1	KMEM
TQ-18-5215		2.5" NH GATED ELBOW LEFT HAND - C1 - VALVE UNDER MONITOR	1	KMEM
TQ-18-5255		BLIND PLUG - C2 - VALVE UNDER MONITOR	1	KMEM
TQ-18-5265		BLIND PLUG - C3 - VALVE UNDER MONITOR	1	KMEM
TQ-18-5275		2.5" NH GATED ELBOW RIGHT HAND - C4 - VALVE UNDER MONITOR	1	KMEM
TQ-18-6100	>	PLATFORM, SINGLE AKRON #3481 MONITOR	1	KMEM
TQ-18-6200		PLATFORM, AKRON #5160 NOZZLE	1	KMEM
TQ-20-1500		100' PLATFORM, MID-MOUNT 5-SECTION LADDER CAPACITIES	1	KMEM
TQ-20-3500		5-SECTION PLATFORM, WATERWAY CAPACITIES - SINGLE GUN	1	KMEM
TQ-50-0200	>	FIRE DEPT AERIAL FAMILIARIZATION - PROVIDED BY REP	1	KMEM
TQ-50-0240	>	REP PROVIDED FAMILIARIZATION - FOUR (4) DAYS	1	KMEM
TQ-50-0600		AERIAL SERVICE, ALL DEVICES	1	KMEM
TQ-50-0700		WARNING DECALS, ALL DEVICES	1	KMEM
TQ-52-0100		AERIAL LADDER, MANUALS, TWO (2) SETS	1	KMEM
TQ-70-1500		100' PLATFORM MID-MOUNT 5-SECTION CERT. & TESTING	1	KMEM
		**** HEADER - PAINT SECTION - ALL UNITS ****	1	KMEM
UA-00-1100		GENERAL PAINT DESCRIPTION - ALL	1	KMEM
UA-00-1200		GENERAL PRIMER & PREP DESCRIPTION - LADDER/PLATFORM	1	KMEM
UA-00-1400		GENERAL FINISH PAINT DESCRIPTION - LADDER/PLATFORM	1	KMEM

PART NO	S	DESCRIPTION	QTY	ID
UA-00-2700		BODY BUFFING & FINISH - LADDER/PLATFORM	1	KMEM
		**** HEADER - LADDER/PLATFORM BODY PAINT ****	1	KMEM
UA-03-0100		INSIDE/UNDERSIDE BODY PAINTED BLACK - LADDER/PLATFORM	1	KMEM
UA-03-0300		JOB COLOR COMPARTMENT INT W/SPATTER PAINT - LADDER/PLATFORM	1	KMEM
UA-03-0900		SINGLE COLOR BODY PAINT SCHEME - LADDER/PLATFORM	1	KMEM
UA-03-2200		PUMPHOUSE & PLUMBING PAINTED JOB COLOR - LADDER/PLATFORM	1	KMEM
		**** HEADER - TANDEM AXLE CUSTOM CHASSIS PAINT (AERIAL)	1	KMEM
UA-05-0050		CUSTOM CAB PRIMER & PREP	1	KMEM
UA-05-0070		CUSTOM FINISH PAINT & PREP	1	KMEM
UA-05-0200		TWO TONE CUSTOM CAB PAINT SCHEME	1	KMEM
UA-05-0350		CUSTOM CAB BUFFING & FINISH	1	KMEM
UA-05-0360		CUSTOM CAB INTERIOR PAINT - TEXTURED GRAY	1	KMEM
UA-05-0400		CUSTOM CHASSIS GLOSS BLACK COLOR FRAME RAILS	1	KMEM
UA-05-0505		CUSTOM CHASSIS WHEEL AND HUB PAINT - TANDEM AXLE	1	KMEM
UA-06-0200		LADDER, PAINTING, ALL DEVICES, WHITE #91528	1	KMEM
UA-06-0450		EXTENSION CYLINDERS PAINTED TO MATCH LADDER COLOR	1	KMEM
UA-06-0905		TORQUEBOX PAINT - BLACK	1	KMEM
UA-06-1100		OUTRIGER PAINT - SILVER URETHABOND 104	1	KMEM
UA-06-1205		TURNTABLE PAINT - LADDER COLOR	1	KMEM
UA-06-1215		TURNTABLE CONSOLE PAINT - LADDER COLOR	1	KMEM
UA-06-1225		LIFT CYLINDERS CONSOLE PAINT - LADDER COLOR	1	KMEM
UA-06-1240		BREATHING AIR CYLINDER/S PAINT - YELLOW #81485	1	KMEM
UA-06-1500		LADDER RUST INHIBITOR - ALL DEVICES	1	KMEM
UA-06-2120	>	PAINT CODES, TWO-TONE COLORS, FILL IN BLANKS	1	KMEM
UA-06-2130		PAINT CODES, AERIAL DEVICE - WHITE #91528	1	KMEM
UA-06-2200		PINT OF TOUCH-UP PAINT	1	KMEM
UA-06-2510		FINALIZATION & DETAILING - LADDER/PLATFORM	1	KMEM
UA-06-2850		RUSTPROOFING WARRANTY, TEN (10) YEAR	1	KMEM
		**** HEADER, LETTERING & STRIPING - 100-5-MM-PL	1	KMEM
UA-12-0500		DELETE KME SUPPLIED LETTERING	1	KMEM
UA-12-1200		GOLDLEAF W/ DROP SHADOW LETTERING ON FRONT CAB DOORS	1	DLR
UA-12-1255		CUSTOM LETTERING ON FRONT CAB DOORS	1	DLR
UA-12-1795		CUSTOM LETTERING ON CREW CAB DOORS	1	DLR
UA-12-2175		GOLDLEAF W/ DROP SHADOW LETTERING ABOVE WINDSHIELD	1	DLR
UA-12-2600		SCOTCH-CAL W/O DROP SHADOW LETTERING ON FRONT BUMPER	1	DLR
UA-12-2700		GOLDLEAF W/ DROP SHADOW LETTERING ON FRONT OF CAB	1	DLR
UA-12-2755		CUSTOM LETTERING ON FRONT BUMPER	1	DLR
UA-12-3100		GOLDLEAF W/ DROP SHADOW LETTERING ON CAB SIDE PANEL	1	DLR
UA-12-3155		CUSTOM LETTERING ON CAB SIDE PANEL	1	DLR
UA-12-3600		SCOTCH-CAL W/O DROP SHADOW LETTERING ON REAR COMPARTMENT DOOR	1	DLR
UA-12-3755		CUSTOM LETTERING ON REAR DOOR	1	DLR
UA-14-1210		CUSTOM FIRE DEPARTMENT LOGO	1	DLR
UA-14-1215		SCOTCH-CAL W/ TWO COLORS - LOGO	1	DLR
UA-14-1235		LOCATION - CUSTOM LOGO	1	DLR
UA-20-0110		14" X 108" LETTERING PANELS ON BASE SECTION	1	KMEM
UA-20-0200		SIGN PANELS TO PAINTED TO MATCH AERIAL DEVICE COLOR	1	KMEM
UA-20-0530		GOLDLEAF W/ DROP SHADOW LETTERING FOR AERIAL	1	DLR
UA-20-0600		LETTERING ON AERIAL TO BE PROVIDED BY SALE REP	1	KMEM
UA-50-0200		NFPA REQUIRED SCOTCH-LITE STRIPINGSTRIPING - TA AERIAL	1	KMEM
UA-50-0215		6" SCOTCH-LITE STRIPE ON CAB AND BODY - TA AERIAL	1	KMEM
UA-58-5100		WHITE SCOTCH-LITE	1	KMEM
UA-80-6000		REAR CHEVRON STRIPING	1	KMEM
UA-80-6002		50% VERTICAL SURFACE	1	KMEM
UA-80-6050		6" 50% REAR SCOTCH-LITE DIAMOND GRADE CHEVRON STRIPING	1	KMEM
UA-80-6075		RED & FLUORESCENT YELLOW GREEN DIAMOND GRADE SCOTCH-LITE	1	KMEM
		**** PROPOSED - AERIAL WARRANTY PKG, W/PUMP @ REAR OF SPEC	1	KMEM
W6-00-000J		PROPOSED - KME WARRANTY, STARTING ON DELIVERY DATE	1	KMEM
W6-00-0010	X <	PROPOSED - 5 YEAR FCAM WARRANTY - CUSTOM CHASSIS	1	
		$19,500 per email Phil to Byron 9-27-16		

PART NO	S	DESCRIPTION	QTY	ID
W6-00-003M		***> PROPOSED - 5 YEAR WARRANTY - BASE WITH CUSTOM CHASSIS***	***1***	***KMEM***
W6-00-0163		***PROPOSED - 10 YEAR CUMMINS ISX - EXTENDED WARRANTY***	***1***	***KMEM***
W6-00-0210		PROPOSED - 5 YEAR ALLISON EVS TRANSMISSION WARRANTY	1	KMEM
W6-00-0230		PROPOSED - LIFETIME FRAMERAIL WARRANTY	1	KMEM
W6-00-0242		PROPOSED - SHEPPARD STEERING GEAR STANDARD - THREE YEAR WARRANTY	1	KMEM
W6-00-0254		***PROPOSED - 5 YEAR MERITOR FRONT AXLE - WARRANTY***	***1***	***KMEM***
W6-00-0266		***PROPOSED - 5 YEAR MERITOR 180 SERIES TANDEM AXLE REAR - WARRANTY***	***1***	***KMEM***
W6-00-0320		> PROPOSED - 10 YEAR CAB STRUCTURAL WARRANTY	1	KMEM
W6-00-0330		PROPOSED - 10 YEAR BODY STRUCTURAL WARRANTY	1	KMEM
W6-00-0390		PROPOSED - 10 YEAR CAB & BODY CORROSION WARRANTY	1	KMEM
W6-00-0450		***PROPOSED - PAINT FINISH WARRANTY, TEN (10) YEAR***	***1***	***KMEM***
W6-00-0470		***PROPOSED - 5 YEAR LETTERING WARRANTY***	***1***	***KMEM***
W6-00-0490		***PROPOSED - 10 YEAR STAINLESS STEEL PIPING WARRANTY***	***1***	***KMEM***
W6-00-0550		***PROPOSED - REAR SUSPENSION - RIDEWELL - AIR RIDE - 3 YEAR WARRANTY***	***1***	***KMEM***
W6-00-0570		PROPOSED - SAFEGUARD TECHNOLOGY - 10 YEAR - RUNG COVERS	1	KMEM
W6-00-0610		***PROPOSED - 20 YEAR AERIAL PLATFORM WARRANTY***	***1***	***KMEM***
W6-00-0655		***> PROPOSED - TEN 10 YEAR AERIAL WATERWAY WARRANTY***	***1***	***KMEM***
W6-00-0695		***PRO - AERIAL DEVICE HYDRAULIC COMPONENT WARRANTIES***	***1***	***KMEM***
W6-00-0710		PROPOSED - LIFETIME POLY TANK WARRANTY - ALL TANKS	1	KMEM
W6-00-0820		***PROPOSED - WATEROUS 5 YEAR PUMP WARRANTY (PARTS & LABOR)***	***1***	***KMEM***
W6-00-0823	***X***	***WATEROUS FCAM 5 YR WARRANTY CORRECTION***	***1***	
W6-00-1330		***PROPOSED - AKRON - 5 YEAR LIMITED WARRANTY***	***1***	***KMEM***
W6-00-1340		PROPOSED - AKRON HEAVY DUTY VALVE - 10 YEAR WARRANTY	1	KMEM
W6-00-1500		***PROPOSED - BOSTROM SEATING 5 YEAR WARRANTY***	***1***	***KMEM***
W6-00-1600		***PROPOSED - SMART POWER HYDRAULIC GENERATORS - 5 YEAR***	***1***	***KMEM***
W6-01-1153		***DEALER FURNISHED PICK-UP & DELIVERY DURING WARRANTY***	***1***	***DLR***
WA-00-0010		"AERIAL FIRE APPARATUS" NFPA 2016 STATEMENT OF EXCEPTIONS	1	KMEM

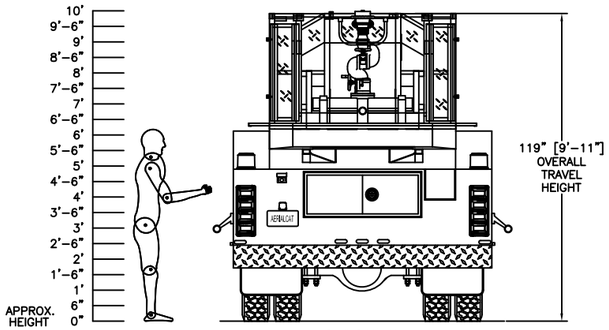

REAR VIEW

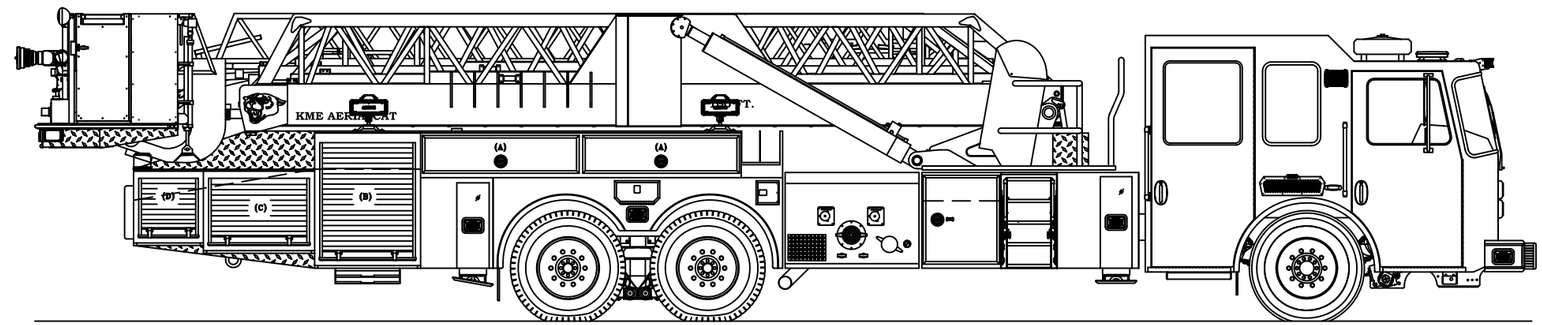

OFFICERS SIDE VIEW

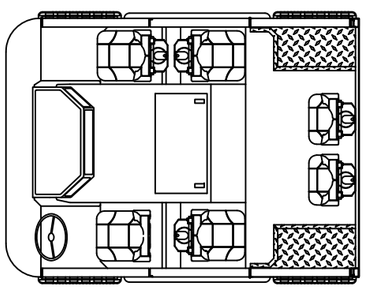

CAB INTERIOR LAYOUT

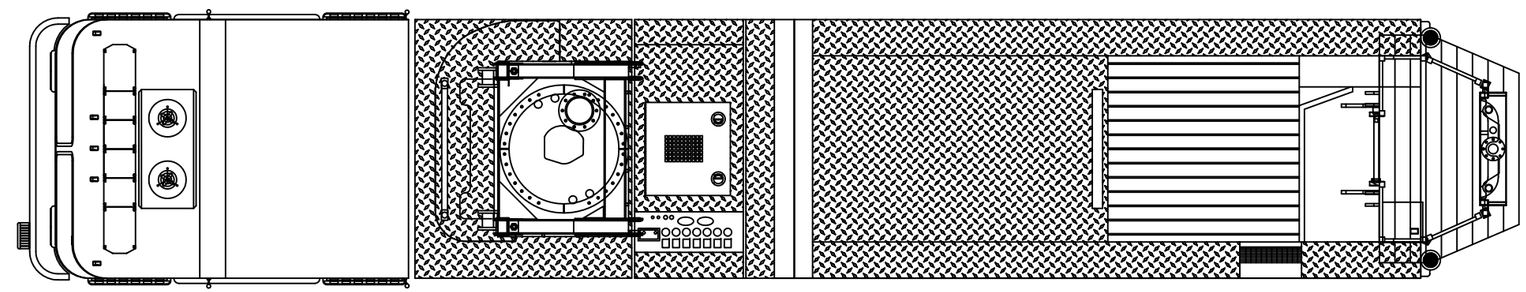

TOP VIEW

FRONT VIEW

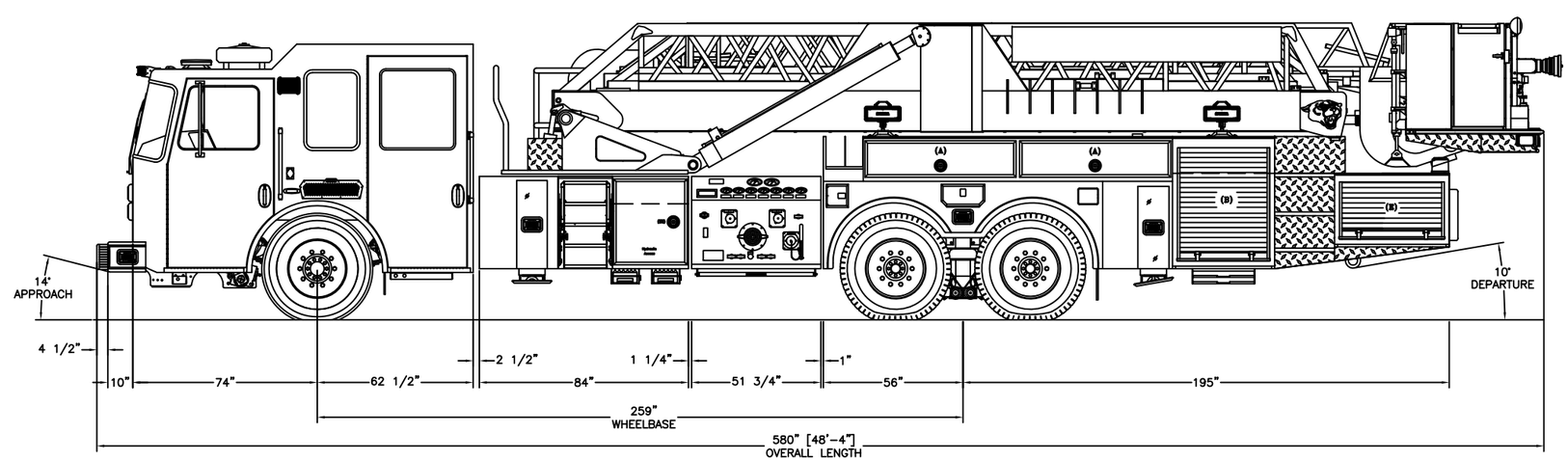

DRIVERS SIDE VIEW

CAB: 100"W PREDTAOR MFD 10" RAISED ROOF
ENGINE & TRANS. CUMMINS ISX12 500 HP/4000 EVS
AXLES: 23,000# FRONT/58,000# REAR
PUMP: WATEROUS S100 1,500 GPM SINGLE STAGE
WATER TANK: 300 GALLONS
SMART POWER HR 8KW

THIS DRAWING IS A GENERAL CONFIGURATION AND MAY NOT NECESSARILY REFLECT ALL CONTRACTUAL REQUIREMENTS. CONTRACT SPECIFICATIONS SHALL PREVAIL OVER DRAWING.

CUSTOMER APPROVAL:

NAME:

TITLE:

DATE:

SYM	DATE	REVISION DESCRIPTION	APP'D

SALES ENGINEER : TBD

DIMENSIONS ARE APPROXIMATE & MAY VARY DUE TO BUILD ADJUSTMENTS

SCALE	DWG SIZE	DRAWN BY	Z.ZSCHUNKE	DATE
NONE	B	APPROVED BY	P.HOHERCHAK	9-26-16

100' MID-MOUNT PLATFORM

MAPC 2 HIGH END QUINT

PROPOSAL DRAWING

KME
ONE INDUSTRIAL COMPLEX - NESQUEHONING, PA 18240

KME

MID-RANGE FCAM 102 FOOT

REAR MOUNT AERIAL

PLATFORM

“QUINT”

MAPC 3

Quote SO

MAPC/FCAM	MAPC 3 MID RANGE 102' REAR MOUNT PLATFORM

Sales Rep:

Terms:

Drawing #:
Est. Delivery Date: / /
Customer PO #:
Customer #:
QPF #:

Penalty:

Quote No: 10005-0012
10/04/2016

PART NO	S	DESCRIPTION	QTY	ID
		== REAR MOUNT PLATFORM - 713.016 07/13/16 ==	**1**	**KMEM**
		== LETTERING & STRIPING, 102' RM - 713.016 07/13/16 ==	**1**	**KMEM**
		== COMPARTMENT ACCESSORIES REARMOUNT AERIAL - 713.016 07/13/16 ==	**1**	**KMEM**
		== HD RM WITH PUMP GEN/ELEC AC - 713.016 07/13/16 ==	**1**	**KMEM**
		== AERIAL WARRANTY PACKAGE W/PUMP - 713.016 07/13/16 ==	**1**	**KMEM**
		== SPECIAL, QUOTE OVERRIDE - 713.016 07/13/16 ==	**1**	**KMEM**
		DEALER ======= DEALER ======= DEALER	**1**	**DLR**
		QUOTE DATA VERSION: 0713.016 - 2016 DATA SET	**1**	**KMEM**
		INDEX OF PART NUMBERS	**1**	**KMEM**
		****** HEADER - CONTRACTS, PROPOSAL FORM, ETC @ FRONT OF SPECS**	**1**	**KMEM**
		****** PROPOSED - AERIAL SPEC BOILERPLATE**	**1**	**KMEM**
04-00-0000		PROPOSED - GENERAL INFORMATION - NFPA 1901	1	KMEM
04-00-0033		PROPOSED - COMPLETION INFO	1	KMEM
04-00-0040		PROPOSED - FMVSS CERTIFICATION	1	KMEM
04-00-0060		PROPOSED - RECORDS	1	KMEM
04-00-0075		PROPOSED - TOP OF THE LINE CHASSIS MULTIPLEX	1	KMEM
04-00-0107		PROPOSED - GENERAL CONSTRUCTION - AERIAL	1	KMEM
04-00-0120		PROPOSED - SINGLE LINE RESPONSIBILITY	1	KMEM
04-00-0130		PROPOSED - PRODUCT LIABILITY - $30,000,000.00	1	KMEM
04-00-0170		PROPOSED - CRITERIA & CODE CONFORMANCE - AERIAL	1	KMEM
04-00-0193		PROPOSED - PAINT PERFORMANCE CERTIFICATION	1	KMEM
04-00-0200		PROPOSED - AFTERMARKET SUPPORT WEBSITE	1	DLR
04-00-0490		PROPOSED - PRICES & PAYMENTS	1	KMEM
04-00-0540		PROPOSED - BOND REQUIREMENTS	1	KMEM
04-00-0560		PROPOSED - PERFORMANCE BOND	1	KMEM
04-00-0630		PROPOSED - MATERIAL & WORKMANSHIP	1	KMEM
04-00-0660		PROPOSED - CONTRACT SPECIALIST	1	KMEM
04-00-0680		PROPOSED - APPROVAL DRAWING	1	KMEM
04-00-1200		PROPOSED - DELIVERY	1	KMEM
04-00-1215		PROPOSED - INSTRUCTION MANUALS, TWO (2) SETS - CD	1	KMEM
04-00-1215		POWERPOINT DELIVERY - PROPOSAL FCAM AERIAL	1	DLR
04-00-1300		PROPOSED - VEHICLE FLUIDS PLATE	1	KMEM

PART NO	S	DESCRIPTION	QTY	ID
04-00-1500		PROPOSED - MANUFACTURE GENERATED EXACT BLUEPRINT WITH BID	1	KMEM
04-00-1521	X	PROPOSED - KME and BULLDOG FAMA MEMBERSHIP	1	
04-00-1540		PROPOSED - MANUFACTURED IN THE UNITED STATES	1	KMEM
04-00-1550		PROPOSED - ISO 9001 QUALITY MANAGEMENT SYSTEM	1	KMEM
04-00-1700		PROPOSED - COOPERATIVE PURCHASING	1	KMEM
04-00-2440		PROPOSED - UNDERWRITERS LABORATORIES (UL) TESTING - AERIAL	1	KMEM
07-00-0015		"AERIAL FIRE APPARATUS" NFPA 2016 CHAPTERS OF COMPLIANCE	1	KMEM
08-00-0000		VEHICLE DATA PLATE DESCRIPTION	1	KMEM
14-00-0000		NFPA ROLLOVER STABILITY GENERAL STATEMENT	1	KMEM
15-00-0010	>	PROPOSED - PRINCIPAL APPARATUS DIMENSIONS & GVWR	1	KMEM
15-00-0050		!!! CRITICAL OVERALL HEIGHT REQUIREMENT !!! - "NO"	1	KMEM
15-00-0150		!!! CRITICAL OVERALL LENGTH REQUIREMENT !!! - "NO"	1	KMEM
AA-00-002A		SERVICE CENTER - PROPOSAL FCAM	1	DLR
BA-00-0115		<1> 102-RM-PL AERIALCAT PLATFORM	1	KMEM
BA-00-3000		SEAT AND SEAT BELT ANCHOR TESTING	1	KMEM
BA-02-0635		<2> RM PREDATOR - TANDEM AXLE- HD 102' RM	1	KMEM
BA-02-3125		<3> 138" TRAVEL HEIGHT - 102' RM	1	KMEM
BA-03-1660		<4> LO BODY, 102-RM-PL WITH PUMP	1	KMEM
BA-04-0575		AERIAL CHASSIS, REAR MOUNT PREDATOR -TANDEM AXLE (HEAVY)	1	KMEM
		****** HEADER - 100" PREDATOR CAB ******	**1**	**KMEM**
BA-04-0805		PREDATOR CAB - BASE, 100"	1	KMEM
BA-04-0850		PREDATOR CAB - BASE - ALUMINUM CONSTRUCTION	1	KMEM
BA-04-0990		PREDATOR 100" - CRASH TESTING	1	KMEM
BA-04-0995		PREDATOR 100" - 120,000# ROOF & SIDE TESTING	1	KMEM
BA-04-1300		PREDATOR 100" - MFD CAB LENGTH (DIM - 62 1/2")	1	KMEM
BA-04-1900		PREDATOR 100" - VISTA DIMENSIONS FRONT SEATING & ENGINE ENCLOSURE	1	KMEM
BA-04-4560		2010 - RM 10" RAISED w/13" ROOF NOTCH	1	KMEM
BA-04-4850		52" WIDE NOTCH AERIAL RAISED ROOF OPT	1	KMEM
BA-05-0260		BATTERY ACCESS DOORS - REAR STEP WELLS, EACH SIDE	1	KMEM
BA-05-0510		FULL LENGTH CAB DOORS - 100" PREDATOR "MFD, LFD & X-LFD"	1	KMEM
BA-05-0670		CAST ANTI-SLIP ENTRY STEPS FOR FULL LENGTH CAB DOORS	1	KMEM
BA-05-1010		PREDATOR DOOR LATCHES, HD LOOP STYLE LATCH - FULL LENGTH DOORS	1	KMEM
BA-05-1035		LOCKING CAB DOOR , OUT + IN, LOOP STYLE LATCH	1	KMEM
BA-05-1037		KEY MODEL #2001	1	KMEM
BA-05-1103		WINDOWS, MANUAL HAND CRANK STYLE - 100"	1	KMEM
BA-05-1130		DOOR WINDOW TRIM EXTRUSION, 4 - DOOR	1	KMEM
BA-05-1310		UPPER INTERIOR DOOR PANELS - ABS, 4-DOOR	1	KMEM
BA-05-1410		BRUSHED ALUMINUM DOOR SCUFF PLATES, 4 - DOOR	1	KMEM
BA-05-1510		SCOTCHLITE MATERIAL ON INTERIOR OF DOOR PANEL 4-DOORS	1	KMEM
		****** HEADER - CAB EXTERIOR ACCESSORIES & OPT, 100" PREDATOR**	**1**	**KMEM**
BA-05-2410		WINDSHIELD, 100" PREDATOR CAB	1	KMEM
BA-05-2425		WINDSHIELD WIPERS & WASHERS - 100" PREDATOR	1	KMEM
BA-05-2450		SIDE VIEWING WINDOWS NON-SLIDING - PREDATOR	1	KMEM
BA-05-2500		DARK TINT WINDOWS, SIDE VIEWING, REAR DOORS & REAR WALL	1	KMEM
BA-05-2600		GRAB RAILS EXTERIOR, KNURLED ALUMINUM EXTRUSION	1	KMEM
BA-05-2668		PREDATOR INTERIOR GRAB HANDLES - WHEELABRATED	1	KMEM
BA-05-2692		INTERIOR "A" POST GRAB HANDLE "PREDATOR" - WHEELABRATED	1	KMEM
BA-05-2715		FRONT CAB GRILLE - FORMED STAINESS STEEL MIRROR FINISHED - 100" PREDATOR	1	KMEM
BA-05-2780		FRONT CAB GRILLE SCREEN - BLACK MESH - 100" PREDATOR/PANTHER	1	KMEM
BA-05-2815		SIDE CAB GRILLES - SHAPED BRIGHT FINISHED - 100" PREDATOR	1	KMEM
BA-05-2900		ALUMINUM CAB WHEEL LINERS	1	KMEM
BA-05-2910		ALUMINUM CAB FENDERETTES	1	KMEM
BA-05-3000		FRONT MUD FLAPS	1	KMEM
BA-05-3500		VELVAC MIRRORS " WEST COAST" HEATED / REMOTE - W/CONVEX SPOT	1	KMEM
BA-05-3690		MIRROR CONTROL IN MULTIPLEX CONTROL SCREEN	1	KMEM
BA-05-5115		INTERIOR TRIM, 100" PREDATOR	1	KMEM
BA-05-5180		CUSTOM CAB INTERIOR PAINT - TEXTURED GRAY	1	KMEM

PART NO	S	DESCRIPTION	QTY	ID
BA-05-5200		PREDATOR REAR INTERIOR CAB WALL, GRAY DURAWEAR UPHOLSTERY	1	KMEM
BA-05-5335		TREAD PLATE KICK PLATE ON LOWER INTERIOR REAR WALL	1	KMEM
BA-05-5530	>	STORAGE COMPARTMENTS UNDER FRONT SEATS - 100" PREDATOR	1	KMEM
BA-05-5610		BARYFOL FLOORING	1	KMEM
BA-05-5650		1" ACOUSTICAL INSULATION	1	KMEM
BA-05-5824		ENGINE ENCLOSURE 100" PREDATOR FAB DASH (DURAWEAR)	1	KMEM
BA-05-5860		ENGINE ENCLOSURE MATERIAL - ALUMINUM CAB	1	KMEM
BA-05-7040		SUN VISORS, 100" PREDATOR CAB, PADDED VINYL	1	KMEM
BA-06-0400	>	DELETED - TOP ROLLOVER PROTECTION SYSTEM	1	KMEM
		****** HEADER - CAB SEATING & ACCESSORIES, 100" - PREDATOR MFD**	**1**	**KMEM**
	>	****** SEATING OPTIONS BOSTROM, 100" - PREDATOR - MFD - NON ROLLTEK**	**1**	**KMEM**
BA-06-3220	>	DRIVERS SEAT, BOSTROM EX8 SIERRA ELECTRIC BASE - ABTS	1	KMEM
BA-06-3630		OFFICERS SEAT, BOSTROM 450 SCBA, ABTS, FIXED	1	KMEM
BA-06-3930		BOSTROM "SECUREALL" SCBA BOTTLE BRACKET - OFFICER'S SEAT	1	KMEM
		MFD CAB - REAR FACING BOSTROM SEATS - NON ROLLTEK	**1**	**KMEM**
BA-06-4110		BOSTROM 450 SCBA ABTS REAR FACING, OUTBOARD, DS	1	KMEM
BA-06-4195		BOSTROM "SECUREALL" SCBA BOTTLE BRACKET - OUTBOARD, DS	1	KMEM
BA-06-4210		BOSTROM 450 SCBA ABTS REAR FACING, OUTBOARD, OS	1	KMEM
BA-06-4295		BOSTROM "SECUREALL" SCBA BOTTLE BRACKET - OUTBOARD, OS	1	KMEM
		MFD CAB - FORWARD FACING BOSTROM SEATS - NON ROLLTEK	**1**	**KMEM**
BA-06-5595		**** (2) FORWARD SEATS - UPGRADE SEAT RISER IF (4) ARE NEEDED ****	1	KMEM
BA-06-6210		(2) - BOSTROM 450 SCBA ABTS FORWARD FACING, CENTER	1	KMEM
BA-06-6250		FLIP UP SEAT, FORWARD FACING, (2) CENTER	1	KMEM
BA-06-6325		BOSTROM "SECUREALL" SCBA BOTTLE BRACKET - (2) CENTER FORWARD	1	KMEM
BA-06-7100		CENTER OPEN COMPT. SEAT BASE - BOLT IN - MFD, XMFD	1	KMEM
BA-06-8005		BOSTROM SEATING MATERIAL, GRAY TWEED DURAWEAR	1	KMEM
BA-06-8055		NO SCBA PARADE COVERS SUPPLIED	1	KMEM
		****** HEADER - VEHICLE DATA RECORDER SYSTEMS**	**1**	**KMEM**
BA-06-9103	>	CLASS ONE SEAT BELT WARNING SYSTEM - UP TO 6 POSITIONS - ULTRAVIEW DISP	1	KMEM
BA-06-9125		SIX (6) SEATING POSITIONS (SELECT QTY)	1	KMEM
BA-06-9310		CLASS ONE VEHICLE DATA RECORDER - MULTIPLEX	1	KMEM
		****** HEADER - CAB INTERIOR ACCESSORIES & OPTIONS, 100" PREDATOR**	**1**	**KMEM**
BA-07-7010	>	STANDARD #MATM RADIO ANTENNA INSTALLED	2	KMEM
		****** HEADER - INSTRUMENTATION & CONTROLS, 100" PREDATOR - NARROW VISTA**	**1**	**KMEM**
BA-08-0214		DASH & CENTER CONSOLE - 100" PREDATOR FAB DASH (UPHOLSTERED)	1	KMEM
BA-08-0275		INSTRUMENT PANEL, 100" PREDATOR - NARROW	1	KMEM
BA-08-0300		INTER AXLE LOCK CONTROL SWITCH	1	KMEM
BA-08-0315		DIESEL EXHAUST FLUID LEVEL GAUGE	1	KMEM
BA-08-0320		ENGINE COMPRESSION BRAKE CONTROLS	1	KMEM
BA-08-0620		ULTRAVIEW 450 DISPLAY ON CAB DASH FOR ES-KEY SYSTEM	1	KMEM
BA-08-1220		INDICATOR CLUSTER, 100" PREDATOR	1	KMEM
BA-08-1225		"INTER AXLE LOCK" INDICATOR CLUSTER	1	KMEM
BA-08-1235		"ATC DISABLED" INDICATOR CLUSTER	1	KMEM
BA-08-1240		"ATC ACTIVE" INDICATOR CLUSTER	1	KMEM
BA-08-1265		"OUTRIGGERS NOT STOWED" INDICATOR ON DASH	1	KMEM
BA-08-1800		LOWER RIGHT AUXILIARY SWITCH PANEL - PREDATOR - FAB	1	KMEM
BA-08-1900		PUMP SHIFT CONTROL ON LOWER LEFT DASH PANEL	1	KMEM
BA-08-1950		MULTIPLEX CONTROL PUMP SHIFT SWITCH - MULTIPLEX	1	KMEM
BA-08-2000		AERIAL LADDER, LADDER POWER/PTO SWITCHES IN CAB	1	KMEM
BA-08-2750		PREDATOR COMPUTER TERMINAL IN FRONT OF OFFICER (FABRICATED)	1	KMEM
BA-08-2905		OVERHEAD ABS PANEL, FLAT FACED, 100" PREDATOR	1	KMEM
BA-08-4415		RM HEATER/ DEFROSTER & ACCESS, PREDATOR NOTCH - 3" IN FRONT	1	KMEM
BA-08-6900		HVAC CONTROL SYSTEM - INCOPORATED INTO MULTIPLEX CONTROL DISPLAY	1	KMEM
BA-08-9000		CAB TILT SYSTEM & OPTIONS	1	KMEM
BA-08-9110		PARKING BRAKE/CAB TILT INTERLOCK	1	KMEM
		FRAME & AXLE PACKAGE, TANDEM AXLE CHASSIS (HEAVY)	**1**	**KMEM**
BA-09-5200		110,000 PSI FRAME: AERIAL CHASSIS TRIPLE FRAME	1	KMEM

PART NO	S	DESCRIPTION	QTY	ID
		HEADER - FRONT BUMPER, EXTENSIONS & ACCESSORIES	**1**	**KMEM**
BA-10-0050	>	BUMPER 12" STAINLESS STEEL CONTOUR - ALL CABS	1	KMEM
BA-10-0110		10" FRONT BUMPER EXTENSION WITH TREAD PLATE GRAVEL SHIELD	1	KMEM
BA-10-0405		TREADPLATE GRAVEL SHIELD STANDARD INSTALLATION	1	KMEM
BA-10-2010		TWO (2) PAINTED TOW HOOKS BELOW FRONT BUMPER	1	KMEM
BA-10-5000		AERIAL TRAVEL SUPPORT FOR ANY REAR MOUNT TYPE AERIAL	1	KMEM
BA-14-0170		23,000# FRONT AXLE MERITOR MFS-20-133A-N	1	KMEM
BA-14-1110		MERITOR, EX-225 17" DISC BRAKES, FRONT AXLE, W/ AUTO SLACK ADJUSTMENT	1	KMEM
BA-14-2040		SUSPENSION FRONT - 23,000# AXLES	1	KMEM
BA-14-2095		**AERIAL DEVICE TRAVEL HEIGHT CRITICAL!!!! ** REQUIRES SMALL AXLE SPACER	1	KMEM
BA-14-2110		FRONT AXLE SHOCK ABSORBERS - MONROE "MAGNUM - 70"	1	KMEM
BA-15-1060		58,000# TANDEM REAR AXLE MERITOR RT-58-185	1	KMEM
BA-15-1510		16.5" X 7" S-CAM BRAKES - MERITOR REAR TANDEM W/AUTO SLACK ADJ.	1	KMEM
BA-15-2810		VEHICLE TOP SPEED - 2016 NFPA STATEMENT	1	KMEM
BA-15-4640	>	RIDEWELL "DYNALASTIC" 202S RUBBER BLOCK SUSPENSION, TANDEM AXLE 58,000#	1	KMEM
		****** HEADER - BRAKE SYSTEM, TANDEM AXLE VEHICLE**	**1**	**KMEM**
BA-20-1005		BRAKE SYSTEM, TA CHASSIS	1	KMEM
BA-20-1110		ABS BRAKING FOR TANDEM REAR AXLE CHASSIS	1	KMEM
BA-20-1275	>	ELECTRONIC STABILITY CONTROL (ESC) WITH (ATC) - CUSTOM TA	1	KMEM
BA-20-1530		AIR RESERVOIRS 7100 CU IN TA, BASE	1	KMEM
BA-20-1810		STAINLESS STEEL AIR TANK BRACKETS - (4 TANKS)	1	KMEM
BA-20-2025		1/4 TURN DRAIN VALVES ON ALL AIR TANKS	1	KMEM
BA-20-3000		AIR DRYER, HEATED - BENDIX AD-9 12VOLT	1	KMEM
BA-20-5005		COLOR CODED SYNFLEX BRAKE LINES W/QUICK RELEASE FITTINGS - TA	1	KMEM
BA-20-5500		AIR COMPRESSOR -WABCO 18.7 CFM- STD. FOR ALL CUMMINS ENGINES	1	KMEM
BA-20-5810		BRAKE TREADLE VALVE	1	KMEM
BA-20-6010		PARKING BRAKE CONTROL - NEAR DRIVER - ALL WHEEL LOCK	1	KMEM
BA-20-6500		AUX. AIR INLET IN LH DOOR AREA (TO CHARGE VEHICLE AIR SYSTEM)	1	KMEM
		HEADER, TIRE AND WHEEL OPTIONS	**1**	**KMEM**
		HEADER, WHEELS, 23,000 FRONT AXLE - ALUMINUM	**1**	**KMEM**
BA-25-1010		FRONT WHEELS, MILL ALUMINUM DISC TYPE - PAINTED 22.5 X 13, 24,390#	1	KMEM
BA-25-1020		FRONT WHEELS, LUG AND HUB TRIM (MILL ALUM WHEELS)	1	KMEM
BA-25-2030	>	FRONT, GOODYEAR 425/65R22.5 L 24,400# G296 MSA MIXED - 68MPH	1	KMEM
BA-25-2400		GOODYEAR - FIRE SERVICE RATING - TIRE RESTRICTIONS	1	KMEM
		HEADER, TIRES & WHEELS, 58,000 TANDEM REAR AXLE	**1**	**KMEM**
BA-25-5015	>	REAR WHEELS, STEEL DISC TYPE, 22.5 X 9, TA	1	KMEM
BA-25-5040		REAR WHEELS, LUG AND HUB TRIM, TA (STEEL)	1	KMEM
BA-25-7055	>	REAR, GDYR 315/80R22.5 J 64,000# RHD II+ TRACTION - 75MPH, TA	1	KMEM
BA-25-7400		GOODYEAR - FIRE SERVICE RATING - TIRE RESTRICTIONS	1	KMEM
BA-25-9905		TIRE PRESSURE MONITORING - LED VALVE STEM CAPS - TEN TIRES	1	KMEM
		100" PREDATOR - ENGINE PACKAGE, HEAVY TANDEM AXLE CHASSIS	**1**	**KMEM**
		****** 100" - HEADER, ENGINE & ENGINE COMPONENTS**	**1**	**KMEM**
BA-30-3200	>	CUMMINS ISX12 - 500 HP @ 1800 RPM TQ 1645 lb-ft @ 1100 - PREDATOR NARROW	1	KMEM
BA-30-9810		PROPOSED - ENGINE CERTIFICATION CUSTOM CHASSIS	1	KMEM
BA-32-0035		COOLING/RADIATOR, 100" PREDATOR - NARROW	1	KMEM
BA-32-0070		ENGINE COOLANT FILTER - CUMMINS ISC - ISX	1	KMEM
BA-32-0085		COOLING SYSTEM CRITERIA	1	KMEM
BA-32-0100		TRANSMISSION COOLER	1	KMEM
BA-32-0120		RADIATOR SKID PLATE	1	KMEM
BA-32-0160		CHARGED AIR COOLER (FRONT MOUNT)	1	KMEM
BA-32-0245		COOLANT FAN, W/CLUTCH - CUMMINS ISX12	1	KMEM
BA-32-0340		HEATER AND COOLANT HOSES/PIPING	1	KMEM
BA-32-0420		LOW COOLANT INDICATOR LIGHT AND ALARM IN CAB	1	KMEM
BA-33-0020	>	SECONDARY BRAKING - ENGINE COMPRESSION BRAKE	1	KMEM
BA-33-0150		FAST IDLE CONTROL FOR ALL ELECTRONIC ENGINES - SMART WHEEL	1	KMEM
BA-33-0160		ENGINE AIR CLEANER	1	KMEM

PART NO	S	DESCRIPTION	QTY	ID
BA-33-0180		SPARK ARRESTOR	1	KMEM
BA-33-0200		ACCELERATOR PEDAL - FLOOR MOUNT	1	KMEM
BA-33-0250		REMOTE THROTTLE & INTERLOCK HARNESS	1	KMEM
BA-40-0300		ALLISON 4000EVS TRANS. - COMPRESSION BRAKE	1	KMEM
BA-40-0660		FIVE (5) SPEED AUTOMATIC TRANSMISSION - 4000 SERIES	1	KMEM
BA-40-0700		ALLISON TRANSMISSIONS, ELECTRONIC TOUCH PAD SHIFTER IN CAB	1	KMEM
BA-40-0855		TRANSMISSION OIL LEVEL SENSOR	1	KMEM
BA-40-0860		ALLISON PARK TO NEUTRAL	1	KMEM
BA-40-0910		ALLISON PRESELECT PROGRAMMING	1	KMEM
BA-40-0920		PRESELECT PROGRAMMED FOR 4TH GEAR	1	KMEM
BA-40-4720		TES-389 TRANS FLUID 4000EVS TRANSMISSION	1	KMEM
BA-45-0110		DRIVE LINES DANA-SPICER #1810 SERIES	1	KMEM
BA-49-0100		DIESEL EXHAUST FLUID TANK - 5 GALLON	1	KMEM
BA-50-0110		EXHAUST SYSTEM - DPF & SCR SYSTEM - INLINE SYSTEM	1	KMEM
BA-50-0155		ALUMINIZED STEEL EXHAUST TAILPIPE/OUTLET OS - DPF + SCR SYSTEM	1	KMEM
BA-50-0200	>	EXHAUST TAILPIPE MODIFIED FOR FIRE DEPT. VENTILATION SYSTEM	1	KMEM
BA-50-2500		FUEL SYSTEM	1	KMEM
BA-50-2510		FUEL TANK - 65 GALLON, STEEL	1	KMEM
BA-50-2600		STAINLESS STEEL FUEL TANK STRAPS IN LIEU OF STEEL	1	KMEM
BA-50-2625		FUEL LINES - FIBER REINFORCED HOSE	1	KMEM
BA-50-2637		DUAL FUEL LINE SHUT-OFF VALVES	1	KMEM
BA-50-2645	>	CUMMINS FUEL-WATER SEPARATOR	1	KMEM
BA-50-2670		FUEL PUMP SECONDARY ELECTRIC, REQ. ON 210" W-B OR LONGER	1	KMEM
BA-50-2700		FUEL POCKET, LEFT SIDE REAR WHEEL WELL PANEL	1	KMEM
BA-50-5050	>	STEERING - DUAL SHEPPARD POWER STEERING GEARS	1	KMEM
BA-50-7115		STEERING COLUMN - CLOCK SPRING "NARROW"	1	KMEM
BA-50-7155		18" STEERING WHEEL - 4 SPOKE - "NARROW"	1	KMEM
BA-50-7170		SMART WHEEL CONTROLS ON STEERING WHEEL	1	KMEM
BA-50-9000		ROAD SAFETY KITS	1	KMEM
		****** HEADER, RM PLATFORM CHASSIS ELECTRICAL, 100" PREDATOR (OPTIONS)**	**1**	**KMEM**
		****** HEADER, RM PLATFORM W/ PUMP BODY ELECTRICAL (OPTIONS)**	**1**	**KMEM**
BE-01-0005		PREDATOR CHASSIS ELECTRICAL SYSTEM DESCRIPTION	1	KMEM
BE-01-0105		PREDATOR CHASSIS WIRING INSTALLATION	1	KMEM
BE-01-0150		DIRECT BATTERY GROUNDING STRAP - PREDATOR	1	KMEM
BE-01-0153		EMI/RFI PROTECTION	1	KMEM
BE-01-0205		PREDATOR 12 VOLT ELECTRICAL SYSTEM TESTING	1	KMEM
BE-05-0353		CLASS-1 ES-KEY MULTI-PLEXED ELECTRICAL SYSTEM 100" PREDATOR	1	KMEM
BE-05-0450		CLASS-1 ES-KEY ULTRAVIEW 450 DISPLAY	1	KMEM
BE-05-0800		INTER-LOCK MODULE FOR MULTIPLEX SYSTEM	1	KMEM
BE-05-0900		CHASSIS DIAGNOSTICS SYSTEM	1	KMEM
BE-05-1160		VOLTAGE MONITORING SYSTEM - 12 VOLT	1	KMEM
BE-05-1165		INDICATOR LIGHT AND ALARM PROVE-OUT SYSTEM	1	KMEM
BE-05-1170		SEQUENCER	1	KMEM
BE-05-1175		ELECTRICAL HARNESS INSTALLATION - 12 VOLT	1	KMEM
BE-10-0487		DELCO REMY 40SI, 320 AMP BRUSHLESS ALTERNATOR	1	KMEM
BE-15-0730		BATTERIES - SIX (6) EXIDE GROUP 31, 925CCA	1	KMEM
BE-15-1105		PREDATOR BATTERY STORAGE, STEEL, MFD, XMFD, LFD, XLFD	1	KMEM
BE-15-1500		BATTERY DISCONNECT SWITCH, ALL UNITS	1	KMEM
BE-15-1555		COLE HERSEE BATTERY JUMPER STUDS, DS BATTERY BOX	1	KMEM
BE-20-1635		120 VOLT 20 AMP SUPER AUTO EJECT FOR BATT CHARGER - CUSTOM	1	KMEM
BE-20-1715		SHORELINE RECEPTACLE LABEL - NFPA	1	KMEM
BE-20-1720		RED COVER FOR KUSSMAUL AUTO-EJECT RECEPTACLE, #091-55RD	1	KMEM
BE-20-1750		SHORELINE LOCATION - ADJACENT TO DRIVER'S DOOR	1	KMEM
BE-20-2020		KUSSMAUL MODEL 1200, 40AMP W/ 120 VAC 125PSI AIR COMP.	1	KMEM
BE-20-3220		KUSSMAUL AUTO DRAIN ACHP - 120V	1	KMEM
BE-30-0100		CONTROL SWITCHING - EATON MULTIPLEX SWITCHES - 12 ABOVE DRIVER	1	KMEM
BE-30-0120		CONTROL SWITCHING - EATON MULTIPLEX SWITCHES - 9 LOWER PANEL	1	KMEM
BE-30-2500		CONTROL SWITCHING LABELING	1	KMEM
BF-00-0515		WELDON #8080-8000-13 WHITE/RED LED INTERIOR LIGHTS (4)	1	KMEM

PART NO	S	DESCRIPTION	QTY	ID
BF-00-5000		DOOR OPEN INDICATOR W/ INTEGRAL AUDIBLE ALARM	1	KMEM
		****** HEADER, 12V POWER/ USB CHARGING/ POWER - GROUND CIRCUITS, CUSTOM ******	**1**	**KMEM**
BF-01-6000		12 VOLT POWER AND GROUND CIRCUIT FOR ACCESSORIES IN DASH	1	KMEM
		****** HEADER, REAR/SIDE VISION CAMERA SYSTEMS ******	**1**	**KMEM**
BF-20-0060		DUAL HEADLIGHTS, LED, PREDATOR - PETERSON - DUAL BEZELS	1	KMEM
BF-20-0320		DAYTIME RUNNING LIGHTS, ALL CABS	1	KMEM
BG-00-0055		DUAL MODULE w/ CODE 3 65STA LED TURN SIGNAL & REQ WARN LIGHT	1	KMEM
BG-00-0410		CUST RM PLATFORM CHASSIS LED MARKER LIGHTS	1	KMEM
BG-00-0510		CUST RM PLATFORM BODY LED MARKER LIGHTS	1	KMEM
BG-00-1250		WHELEN # LED MARKER LIGHTS @ TOP ROOF EDGE OF CAB RM PLAT	1	KMEM
BG-00-1300		STAINLESS STEEL MOUNTING PLATE FOR CENTER THREE MARKER LIGHTS - AERIAL NOTCH	1	KMEM
BG-00-1600		TRUCK-LITE MARKER LIGHTS @ EA SIDE OF CAB, ADJACENT TO DRIVER DOOR	1	KMEM
BG-00-1610		TRUCK-LITE MARKER/TURN LIGHTS @ EA SIDE OF BODY	1	KMEM
BG-00-1660		TRUCK-LITE MARKER LIGHTS @ REAR OF BODY	1	KMEM
BG-00-1800		TRUCK-LITE DOT AMBER REFLECTORS @ SIDE OF BODY	1	KMEM
BG-00-1810		TRUCK-LITE DOT RED REFLECTORS @ REAR OF BODY	1	KMEM
BG-00-2915		TECNIQ #L10 LED LICENSE PLATE LIGHT @ DS REAR OF BODY	1	KMEM
BG-02-2530		CODE 3, #65 LED BRAKE, REVERSE, & TURN W/ TRI HOUSING	1	KMEM
BH-04-1050		CAB STEP LIGHTS, TECNIQ EON 3 LED, ALL DEVICES	4	KMEM
BH-04-1130		BODY STEP LIGHTS, TECNIQ EON 3 LED, ALL DEVICES	4	KMEM
BH-05-1625		DUNNAGE AREA LIGHTING, TECNIQ EON 3 LED	1	KMEM
BH-05-2300		AERIAL ACCESS LADDER ILLUMINATION - WHELEN 3" LED - RM BODY	1	KMEM
	>	****** HEADER, HOSE BED LIGHTING ******	**1**	**KMEM**
BH-06-0300		FIRETECH WL1000 LED, HOSE BED LIGHTS, ALL DEVICES	1	KMEM
BH-06-2200		HOSE BED WORK LIGHT - SWITCH	1	KMEM
		****** HEADER, SCENE LIGHTS - CUSTOM CHASSIS ******	**1**	**KMEM**
		****** HEADER, SCENE LIGHTS - LADDER/PLATFORM W/ PUMP**	**1**	**KMEM**
BH-10-6075		CODE 3 9X7 LED SCENE LIGHTS BEHIND FRONT CAB DOORS	1	KMEM
BH-10-8000		CONTROL SWITCHES IN CAB FOR BEHIND FRONT CAB DOOR LIGHTS	1	KMEM
BH-11-1410		NFPA (4) FIRETECH WL1000 LED GROUND LIGHTS, BELOW CAB DOORS	1	KMEM
BH-11-1440		GROUND LIGHTS, 2 LED BELOW PUMP PANEL RUNNING BOARD - WL1000	1	KMEM
BH-11-1470		GROUND LIGHTS, 2 LED AT REAR BODY CORNERS - WL1000	1	KMEM
		****** HEADER, BROW LIGHTS - CUSTOM RM PLATFORM**	**1**	**KMEM**
		****** HEADER, TELESCOPING LIGHTS, REAR OF CAB - CUSTOM CHASSIS**	**1**	**KMEM**
BH-13-0015		FRC EVOLUTION II LED TELESCOPING W/POLES, 12V- REAR OF CAB	1	KMEM
BH-14-0000		CONTROL SWITCHES IN CAB FOR REAR OF CAB LIGHTS	1	KMEM
BH-20-0060		WIRE UPGRADE FOR 12V HIGH AMP LIGHTS - REAR OF CAB	1	KMEM
BI-00-0200		AERIAL BODY ELECTRICAL SYSTEM	1	KMEM
BI-00-0205		AERIAL BODY ELECTRICAL JUNCTION COMPARTMENT	1	KMEM
BI-00-0210		REAR-MOUNT, AERIAL DEVICE ELECTRICAL JUNCTION COMPARTMENT	1	KMEM
BI-00-0525		BODY ELECTRICAL HARNESS - ES-KEY	1	KMEM
BJ-00-5115		PUMP ENCLOSURE WORK LIGHTS - TECNIQ LED	1	KMEM
BJ-00-5165		ENGINE COMPARTMENT WORK LIGHTS - TECNIQ LED	1	KMEM
		COMPARTMENT LIGHTS - REAR MOUNT TANDEM AXLE	**1**	**KMEM**
BJ-02-0400	>	COMPT. LIGHTS, AMDOR LUMA BAR LED LIGHTING - SINGLE	16	KMEM
		****** HEADER, 12V BODY FLOOD LIGHTING - RM LAD/PLAT/WT W/ PUMP ******	**1**	**KMEM**
		****** CUSTOM REAR MOUNT AERIAL NFPA WARNING LIGHT PACKAGE**	**1**	**KMEM**
BL-95-0000		NFPA COMPLIANT WARNING LIGHT PACKAGE - ALL UNITS	1	KMEM
BL-95-0100		LIGHT PACKAGE ACTUATION/CONTROLS - ALL UNITS	1	KMEM
BL-98-0000		WARNING LIGHT FLASH PATTERN - NFPA FLASH PATTERN	1	KMEM
BM-00-0200		CODE 3 UPPER PACKAGE - CUSTOM REAR MOUNT AERIAL	1	KMEM
BM-02-0072		A-UPPER, CODE 3 LED 2718NFPA1, RX 2700 18" PRIZM II BAR PAIR	1	KMEM
BM-02-1055		C-UPPER, CODE 3 ARCH LED BEACONS - 180° SOLID COLOR	1	KMEM
BM-02-2000		B/D-UPPER REAR, COVERED BY LIGHTS IN ZONE C-UPPER	1	KMEM
BM-02-3000		B/D-UPPER FRONT, COVERED BY LIGHTS IN ZONE A-UPPER	1	KMEM
BM-07-0200		CODE 3 LOWER PACKAGE - CUSTOM REAR MOUNT AERIAL	1	KMEM
BM-09-0018	>	A-LOWER FRONT, CODE 3 65 SERIES LED	1	KMEM

PART NO	S	DESCRIPTION	QTY	ID
BM-09-0098		A-LOWER FRONT MOUNTING, CUSTOM CHASSIS	1	KMEM
BM-09-1014	>	C-LOWER REAR, CODE 3 65 SERIES LED	1	KMEM
BM-09-2006	>	B/D-LOWER FRONT, CODE 3 65 SERIES LED	1	KMEM
BM-09-2098		B/D-LOWER FRONT MOUNTING, CUSTOM CHASSIS	1	KMEM
BM-09-3006	>	B/D-LOWER MID, CODE 3 65 SERIES LED	1	KMEM
BM-09-3506	>	B/D-LOWER SECONDARY MID, CODE 3 65 SERIES LED	1	KMEM
BM-09-4006	>	B/D-LOWER REAR, CODE 3 65 SERIES LED	1	KMEM
BM-15-0000		LIGHT PACKAGE NFPA CERTIFICATION - ALL UNITS	1	KMEM
		****** HEADER, OPTIONAL WARNING LIGHTS**	**1**	**KMEM**
		****** HEADER, AUDIBLE WARNING & COMMUNICATION EQUIPMENT**	**1**	**KMEM**
BW-00-0510		CHASSIS SINGLE ELECTRIC (DOT) HORN	1	KMEM
BW-00-0560		CODE 3, #CA278, BACK-UP ALARM - 87DBA	1	KMEM
BW-00-5000	>	DUAL CHROME AIR HORNS	1	KMEM
BW-00-5100		DUAL AIR HORNS RECESSED IN FRONT BUMPER, STD	1	KMEM
BW-00-5200		AIR HORN CTRL - FOOT FOR OFFICER & STEERING WHEEL FOR DRIVER	1	KMEM
BW-01-0120		SIREN, WHELEN # 295HFS2, 100W - FLUSH MOUNT	1	KMEM
BW-01-1020		ONE (1) WHELEN SA315P SPEAKER	1	KMEM
		****** HEADER, PUMP, TANK & ACC, 102' PLAT 3-SECT, RM, LO**	**1**	**KMEM**
DC-00-2335		WATEROUS CSU-C20-1500 SINGLE STAGE PUMP	1	KMEM
DC-01-4600		WATEROUS PUMP PACKING	1	KMEM
DC-01-6210		WATEROUS "C20" PUMP DRIVE UNIT, ALL WATEROUS MID-SHIP PUMPS	1	KMEM
DC-01-6490		PUMP RATIO (HALE, WATEROUS OR DARLEY)	1	KMEM
DC-01-7140		WATEROUS AIR SHIFT	1	KMEM
DC-01-8590		PUMP SHIFT MANUAL OVERRIDE (HALE, WATEROUS OR DARLEY)	1	KMEM
DC-01-8615		WATEROUS PUMP SHIFT INDICATOR LIGHTS	1	KMEM
DC-01-9020		TRANSMISSION LOCK-UP (HALE, WATEROUS OR DARLEY)	1	KMEM
DC-02-1900		PUMP MOUNTS - MID-SHIP PUMPS	1	KMEM
DC-02-1990		PUMP INSTALLATION - CUSTOM	1	KMEM
		****** HEADER, WATEROUS CSU, CMU, PRESSURE CONTROL**	**1**	**KMEM**
DC-05-1222		FIRE RESEARCH "PUMP BOSS" PBA400 PRESSURE GOVERNOR	1	KMEM
DC-05-1295		TASK FORCE TIPS #A18 SERIES INTAKE RELIEF VALVE	1	KMEM
DC-05-2500		PUMP UL CERTIFICATION - 750 GPM & UP	1	KMEM
		WATEROUS, PUMP PRIMING PUMP AND CONTROLS	**1**	**KMEM**
DC-05-3680	>	TRIDENT "MANUAL" AIR PRIMING SYSTEM	1	KMEM
		WATEROUS, DRAINS & ACCESSORES	**1**	**KMEM**
DC-05-5110		ROTARY MASTER DRAIN VALVE	1	KMEM
DC-05-5400		DRAINS/BLEEDER "INNOVATIVE CONTROLS" LIFT UP @ ALL 1-1/2" OR LARGER	1	KMEM
DC-05-5500		SYNFLEX SUCTION, DISCHARGE, PRESSURE AND CONTROL LINES	1	KMEM
DC-10-2004		SIDE MOUNT PUMP MODULE, HD, RM AERIAL	1	KMEM
DC-10-2500		PUMP MODULE - STEEL CONSTRUCTION	1	KMEM
		****** HEADER, SUCTIONS - REARMOUNT TA-HD, SIDE MOUNT**	**1**	**KMEM**
DC-14-3210		WATEROUS MAIN SUCTION INLETS 6" NST, 1500 GPM CSU PUMP	1	KMEM
DC-14-5300		SHORT NECK MAIN PUMP SUCTION INLETS - DS & OS	1	KMEM
DC-14-5560	>	6" NST MAIN PUMP SUCTION PRESSURE VENTED CAPS (2)	1	KMEM
		HEADER - AUXILIARY SUCTION/S - AERIALS	**1**	**KMEM**
DC-20-1000		2 1/2" AUX. SIDE SUCTION @ DS PANEL TO REAR OF MAIN INLET	1	KMEM
DC-20-1100		2 1/2" AKRON #8800 S.S. BALL VALVE, DS REAR AUX SUCTION	1	KMEM
DC-20-1200		SWING CONTROL @ VALVE, DS REAR AUX SUCTION	1	KMEM
DC-20-9500		BEHIND PANEL MOUNT	1	KMEM
		****** HEADER - TANK TO PUMP - HD REARMOUNTS**	**1**	**KMEM**
DC-25-1200		TANK TO PUMP - 3" VALVE - LADDERS & PLATFORMS	1	KMEM
DC-25-3110		3" AKRON #8800 SERIES - S.S. BALL, VALVE , TANK TO PUMP	1	KMEM
DC-25-5110		3" PUSH/PULL CONTROL FOR TANK TO PUMP	1	KMEM
		****** HEADER - TANK FILL - HD REARMOUNT**	**1**	**KMEM**
DC-30-2100		TANK FILL LINE 2" FROM PUMP - SIDE MOUNT	1	KMEM
DC-30-2300		2" AKRON #8800 SERIES - S.S. BALL TANK FILL, SIDE MOUN	1	KMEM
DC-30-6500		PUSH/PULL CONTROL FOR TANK FILL	1	KMEM
		****** DISCHARGES & ACCESSORIES, RM-TA-HD AERIAL - SIDE MOUNT**	**1**	**KMEM**
		DRIVER'S SIDE #1 MAIN DISCHARGE	**1**	**KMEM**

PART NO	S	DESCRIPTION	QTY	ID
DC-35-0010		DS MAIN DISCHARGE #1 - SIDE MOUNT	1	KMEM
DC-35-0110		2 1/2" AKRON #8800 SERIES - S.S. BALL, DS #1, SIDE MOUNT	1	KMEM
DC-35-1815		DS #1 DISCH - 2 1/2" STRAIGHT NST & 30-DEGREE NST ELBOW	1	KMEM
DC-35-2010		2 1/2" NST PRESSURE VENTED CAP - DS DISCHARGE #1	1	KMEM
DC-35-2410		PUSH/PULL CONTROL FOR DS DISCHARGE #1 -SIDE MOUNT	1	KMEM
DC-35-3110		INNOVATIVE CONTROLS LIQUID FILLED 2 1/2" PRESS GAUGE SS- DS DISCHARGE #1	1	KMEM
		DRIVER'S SIDE #2 MAIN DISCHARGE	**1**	**KMEM**
DC-35-5010		DS MAIN DISCHARGE #2 - SIDE MOUNT	1	KMEM
DC-35-5110		2 1/2" AKRON #8800 SERIES - S.S. BALL, DS #2, SIDE MOUNT	1	KMEM
DC-35-6815		DS #2 DISCH - 2 1/2" STRAIGHT NST & 30-DEGREE NST ELBOW	1	KMEM
DC-35-7010		2 1/2" NST PRESSURE VENTED CAP - DS DISCHARGE #2	1	KMEM
DC-35-7410		PUSH/PULL CONTROL FOR DS DISCHARGE #2 -SIDE MOUNT	1	KMEM
DC-35-8110		INNOVATIVE CONTROLS LIQUID FILLED 2 1/2" PRESS GAUGE SS- DS DISCHARGE #2	1	KMEM
		OFFICER'S SIDE #1 MAIN DISCHARGE	**1**	**KMEM**
DC-39-0010	>	OS MAIN DISCHARGE #1 - SIDE MOUNT	1	KMEM
DC-39-0110		2 1/2" AKRON #8800 SERIES - S.S. BALL, OS #1, SIDE MOUNT	1	KMEM
DC-39-1815		OS #1 DISCH - 2 1/2" STRAIGHT NST & 30-DEGREE NST ELBOW	1	KMEM
DC-39-2010		2 1/2" NST PRESSURE VENTED CAP - OS DISCHARGE #1	1	KMEM
DC-39-2410		PUSH/PULL CONTROL FOR OS DISCHARGE #1 -SIDE MOUNT	1	KMEM
DC-39-3110		INNOVATIVE CONTROLS LIQUID FILLED 2 1/2" PRESS GAUGE SS- OS DISCHARGE #1	1	KMEM
		OFFICER'S SIDE #2 MAIN DISCHARGE	**1**	**KMEM**
DC-39-5010	>	OS MAIN DISCHARGE #2 - SIDE MOUNT	1	KMEM
DC-39-5080	>	**** WATEROUS PUMP LDH DISCHARGE PORT ****	1	KMEM
DC-39-5130	>	4" AKRON #8840 VALVE, OS #2, SIDE MOUNT	1	KMEM
DC-39-6865	>	OS #2 DISCH - 4" STRAIGHT NST	1	KMEM
DC-39-7045		DELETE 4" NST CAP - OS DISCHARGE #2	1	KMEM
DC-39-7315		4" NSTF X 4" STORZ KOCHEK SKE-R 30° ADAPTER WITH CAP OS	1	KMEM
DC-39-7810	>	AKRON HANDWHEEL GEAR VALVE CONTROL, OS DISCHARGE #2	1	KMEM
DC-39-8110		INNOVATIVE CONTROLS LIQUID FILLED 2 1/2" PRESS GAUGE SS- OS DISCHARGE #2	1	KMEM
		CROSSLAY #1 DISCHARGE	**1**	**KMEM**
DC-47-0400		CROSSLAY #1, 1 1/2" - AERIAL	1	KMEM
DC-47-1110		CROSSLAY #1 CAPACITY - 200' OF 1 3/4" HOSE	1	KMEM
DC-47-1410		CROSSLAY #1 - DOUBLE STACK HOSE DESIGN	1	KMEM
DC-47-1510		1 1/2" NST CHICKSAN SWIVEL - CROSSLAY #1	1	KMEM
DC-47-2110		CROSSLAY #1, PLUMBING, 2" STAINLESS STEEL PIPING	1	KMEM
DC-47-2210		2" AKRON #8800 SERIES - S.S. BALL, VALVE CROSSLAY #1, DISCH	1	KMEM
DC-47-2610		PUSH/PULL 1/4 TURN CONTROL CROSSLAY #1	1	KMEM
DC-47-3210		INNOVATIVE CONTROLS LIQUID FILLED 2 1/2" PRESS GAUGE SS - CROSSLAY #1	1	KMEM
		CROSSLAY #2 DISCHARGE	**1**	**KMEM**
DC-47-5400		CROSSLAY #2, 1 1/2" - AERIAL	1	KMEM
DC-47-6110		CROSSLAY #2 CAPACITY - 200' OF 1 3/4" HOSE	1	KMEM
DC-47-6410		CROSSLAY #2 - DOUBLE STACK HOSE DESIGN	1	KMEM
DC-47-6510		1 1/2" NST CHICKSAN SWIVEL - CROSSLAY #2	1	KMEM
DC-47-7110		CROSSLAY #2, PLUMBING, 2" STAINLESS STEEL PIPING	1	KMEM
DC-47-7210		2" AKRON #8800 SERIES - S.S. BALL, VALVE CROSSLAY #2,	1	KMEM
DC-47-7610		PUSH/PULL 1/4 TURN CONTROL CROSSLAY #2	1	KMEM
DC-47-8210		INNOVATIVE CONTROLS LIQUID FILLED 2 1/2" PRESS GAUGE SS - CROSSLAY #2	1	KMEM
		CROSSLAY & SPEEDLAY OPTIONS - RM AERIAL	**1**	**KMEM**
DC-50-7015	>	VINYL CROSS LAY COVER	1	KMEM
DC-50-7030		CROSSLAY COVER RED IN COLOR	1	KMEM
	>	**WATERWAY DISCHARGE**	**1**	**KMEM**
DC-62-0220		AERIAL WATERWAY DISCHARGE - TA-HD AERIAL	1	KMEM
DC-62-1145		WATERWAY DISCHARGE, PLUMBING, 5" STAINLESS STEEL - RM	1	KMEM
DC-62-1240		4" AKRON #8840 SERIES VALVE, WATERWAY	1	KMEM

PART NO	S	DESCRIPTION	QTY	ID
DC-62-1950	>	AKRON HANDWHEEL GEAR VALVE CONTROL, WATERWAY	1	KMEM
DC-62-2210		INNOVATIVE CONTROLS LIQUID FILLED 2 1/2" PRESS GAUGE SS - WATERWAY	1	KMEM
		PUMP PANELS & ACCESSORIES	**1**	**KMEM**
DD-65-0505		SIDE MOUNT PUMP PANEL - RM AERIAL	1	KMEM
DD-65-4120		SIDE MOUNT PANELS - 1/8" BLACK CLAD ALUMINUM	1	KMEM
DD-65-4710		VERTICALLY HINGED GAUGE PANEL - SIDE MOUNT	1	KMEM
DD-65-4810		OFFICER SIDE VERTICALLY HINGED PUMP ACCESS DOOR - SIDE MOUNT	1	KMEM
DD-65-5150		PANEL FASTENERS	1	KMEM
DD-65-5510		CAPS AND ADAPTERS SAFETY TETHER - BALL CHAIN	1	KMEM
DD-65-8820		PUMP PANEL DISCH./SUCTION TRIM PLATES, HIGH POLISHED	1	KMEM
DD-65-9000		DISCHARGE GAUGE TRIM BEZELS	1	KMEM
DD-65-9110		IDENTIFICATION PLATES	1	KMEM
DD-66-0100		PUMP OPERATOR'S PANEL LIGHT SHIELD	1	KMEM
DD-66-0135		TECNIQ E18 LED LIGHTS - LIGHT SHIELD	1	KMEM
DD-66-2100		OS PUMP PANEL LIGHTING	1	KMEM
DD-66-2130		TECNIQ EON 3 LED LIGHTS - OS PUMP PANEL	1	KMEM
		PUMP OPERATOR'S PANEL - SIDE MOUNT, AERIAL	**1**	**KMEM**
DD-70-2332		FIRE RESEARCH "PUMP BOSS" PRESSURE GOVERNOR CONTROL @ PANEL	1	KMEM
DD-70-2410		PUMP PRESSURE & VACUUM TEST PORTS @ PANEL	1	KMEM
DD-70-4120		MASTER PRESSURE & COMPOUND GAUGES - 4" NOMINAL GAUGES	1	KMEM
DD-70-4220		4" INNOVATIVE CONTROLS MASTER PRESSURE AND COMPOUND GAUGES	1	KMEM
DD-70-4680		PRESSURE & COMPOUND GAUGE RANGES - SINGLE STAGE	1	KMEM
DD-70-4900		AUXILIARY ENGINE COOLER	1	KMEM
		WATER TANK LEVEL GAUGE - AERIAL	**1**	**KMEM**
DD-72-0210		IC, SL ULTRA-BRIGHT 10 LIGHT LED WATER TANK GAUGE - PUMP	1	KMEM
DD-72-1100	>	IC WATER LEVEL - 1/4" NPT PRESS TRANSDUCER @ BOTTOM OF TANK	1	KMEM
DD-80-0110		SLIDE-OUT STEP @ DRIVER'S PUMP OPERATOR'S PANEL	1	KMEM
DE-00-1050	>	**** HEADER, 95' & 102' REAR MOUNT PLATFORM, WATER TANK	1	KMEM
		WATER TANKS/OPTIONS AERIALS	**1**	**KMEM**
DE-05-1700	>	UPF POLYIIE TANK, 300 GAL. - AERIAL	1	KMEM
DE-05-6000		TANK DESCRIPT, CONSTR AND MOUNT, UPF POLY IIE TANK	1	KMEM
JA-00-0100		BODY AND COMPARTMENT HEADER (ALL AERIAL DEVICES)	1	KMEM
JA-00-5030		GEN. 3/16" ALUM BODY DESCRIPT REAR MNT. PLATFORMS, HEAVY DUTY	1	KMEM
TF-04-1020		COMPARTMENTATION, -8" SHIFT STYLE #1H-LO	1	KMEM
		****** HEADER, HD-RM BODY OPTIONS (WITH PUMP)**	**1**	**KMEM**
TF-10-0100		BEVELED OVERLAPPING DOORS, ALL COMPARTMENTS, ALL DEVICES	1	KMEM
TF-10-1900		BRUSHED FINISHED DOOR PANS - 2" THICK DOORS	1	KMEM
TF-10-2700		DOOR HINGE FOR BEVELED OVERLAPPING HINGED DOORS	1	KMEM
TF-10-2800		DOOR SEAL FOR BEVELED OVERLAPPING HINGED DOORS	1	KMEM
TF-10-2940		ROTARY LATCHES WITH D-RING HANDLES	1	KMEM
TF-10-3150		GAS SHOCK ON HORIZONTALLY & VERTICALLY HINGED DOORS	1	KMEM
TF-10-6000		COMPARTMENT FLOORS (AERIALS ONLY)	1	KMEM
TF-11-0500		COMPARTMENT GENERAL DESCRIPTION, ALL LADDERS & PLATFORMS	1	KMEM
TF-11-1441		PAINTED REAR BODY PANEL, RM	1	KMEM
TF-11-2275		STAINLESS STEEL OUTRIGGER COVER PANEL, FOUR RIGGER DEVICES	1	KMEM
TF-11-3045		BODY RUB RAILS, C-CHANNEL	1	KMEM
TF-12-1000		RUNNING BOARD STEPS (AERIALS ONLY)	1	KMEM
TF-13-3005		REAR TURNTABLE ACCESS "A" FRAME LADDER FRAMEWORK -8 & -4	1	KMEM
TF-13-3105		REAR MOUNT, TURNTABLE A-FRAME LADDER STEPS (HD)	1	KMEM
TF-13-5000		REAR-MOUNTS, BODY HANDRAILS, EXTRUDED ALUMINUM, A-FRAME BODY	1	KMEM
TF-14-1000		ALUMINUM WHEEL WELL LINERS	1	KMEM
TF-14-1710		POLISHED ALUMINUM FENDERETTES, TANDEM AXLE BODIES	1	KMEM
TF-14-5000		REAR MUD FLAPS	1	KMEM
TF-14-6700		PAINTED REAR TOW EYES, BELOW BODY - REARMOUNT AERIALS	1	KMEM
TF-15-1050		HOSE BED, REAR MOUNT AERIALS, -4 & -8 SHIFT BODIES	1	KMEM
TF-15-1900		ALUMINUM HOSE BED FLOORING - AERIAL	1	KMEM
TF-15-2000	>	HOSE CHUTE, RIGHT SIDE TURNTABLE COMPARTMENTS	1	KMEM
TF-15-3110		HOSE BED COVER, VINYL WITH QTR TURNS	1	KMEM

PART NO	S	DESCRIPTION	QTY	ID
TF-15-3190		HYPALON MATERIAL RED IN COLOR	1	KMEM
		****** HEADER, COMPARTMENT ACCESSORIES - REARMOUNTS**	**1**	**KMEM**
		****** HEADER, HD RM WITH PUMP 120/240 VOLT AC ELEC & GEN**	**1**	**KMEM**
TL-03-0000		120/240 VOLT ELECTRICAL SYSTEM TESTING	1	KMEM
TL-05-2300		SMART POWER PTO/HYD GEN, ER-6 SERIES, 6200 WATT	1	KMEM
TL-05-2900		SMART POWER HOT SHIFT PTO	1	KMEM
TL-05-7105		WARRANTY - SMART POWER ER 6-8-10 PTO/HYD GENERATORS	1	KMEM
TL-08-9990		UL LINE VOLTAGE TESTING	1	KMEM
TL-09-1025	>	GEN LOCATION OFFICER SIDE ABOVE PUMP ENCLOSURE -HD-RM W/PUM	1	KMEM
TL-10-1100	>	TWELVE (12) SPACE, 125 AMP MAIN LUG LOAD CENTER	1	KMEM
TL-10-2045		TEN (10) STANDARD BREAKERS	1	KMEM
TL-10-5040	>	LOCATE BREAKER PANEL DRIVER SIDE FRONT COMPARTMENT	1	KMEM
TL-15-1000		120 & 240 VOLT WIRING METHODS	1	KMEM
		****** HEADER, CORD REELS**	**1**	**KMEM**
TL-20-1010		ONE (1) HANNAY #ECR-1618-17-18, 120 VOLT ELECTRIC CORD REEL	1	KMEM
TL-20-2000		CORD REEL LOCATION DRIVER SIDE ABOVE PUMP ENCLOSURE	1	KMEM
TL-20-2400		CIRCUIT BREAKER REQUIREMENTS FOR CORD REELS	1	KMEM
TL-20-2455		REWIND SWITCH - ON COMPARTMENT WALL	1	KMEM
TL-20-2510	>	STAINLESS STEEL, 4 WAY ROLLER ASSEMBLY	1	KMEM
TL-20-2550		BALL STOP ON END OF CABLE	1	KMEM
TL-20-2745		200' OF 10/3 YELLOW CABLE FOR ONE (1) 120 VOLT REEL	1	KMEM
TL-20-3000		NEMA L5-15, 120 VOLT 15 AMP TWIST LOCK RECEPTACLE ON CABLE	1	KMEM
	>	**"NOTE" READ THIS BEFORE ADDING ANY ADDITIONAL GROUND LADDERS**	**1**	**KMEM**
		****** HEADER, 102-RM-PL LO GROUND LADDERS**	**1**	**KMEM**
TN-00-5055	>	CENTER LADDER STORAGE, 102-RM-PL	1	KMEM
TN-00-7020		ROLL-UP DOOR - BRUSHED, LADDER COMPARTMENT, REAR MOUNT ONLY	1	KMEM
TN-01-0540		ALCO-LITE 115' LADDER COMP, 102-RM-PL	1	KMEM
TN-02-1150		ALCO-LITE PEL-35 35' 2-SECTION EXTENSION LADDER (ALUM)	1	KMEM
TN-02-1170		ALCO-LITE PEL-24 24' 2-SECTION EXTENSION LADDER (ALUM)	1	KMEM
TN-02-2510		ALCO-LITE PRL-16 16' ROOF LADDER W/FOLDING HOOKS (ALUM)	2	KMEM
TN-02-7000		ALCO-LITE AEL-14 14' ATTIC EXTENSION LADDER (ALUM)	1	KMEM
TN-02-8010		ALCO-LITE FL-10 10' FOLDING ATTIC LADDER (ALUM)	1	KMEM
		****** HEADER, PIKE POLES & HOLDERS - AERIALS**	**1**	**KMEM**
TN-10-0500	>	PIKE POLE TUBE(S) - AERIALS	6	KMEM
TN-20-0000		ADDITIONAL ITEMS SHIPPED WITH VEHICLE, ALL AERIAL DEVICES	1	KMEM
		****** HEADER, 102' PLATFORM, REAR MOUNT - NEW 2013**	**1**	**KMEM**
TQ-00-1120		102' PLATFORM, REAR MOUNT, GEN., INTENT & DESIGN STANDARDS - 13	1	KMEM
TQ-00-3000		MOUNTING OF AERIAL, REAR MOUNTS	1	KMEM
TQ-00-3340		HEIGHT AND REACH, 102' 3-SECT. RM PLATFORM - 13	1	KMEM
TQ-00-4000		MATERIAL STANDARDS, ALL DEVICES	1	KMEM
TQ-00-5035		102' PLATFORM, REAR MOUNT HYDRAULIC SYSTEM	1	KMEM
TQ-00-5120		PARKER HOSE KIT - 4 JACK UNIT REARMOUNT	1	KMEM
TQ-00-6120		HYDRAULIC PUMP - PRESSURE COMPENSATED	1	KMEM
TQ-00-7020		HYDRAULIC RESERVOIR - 40 GALLON	1	KMEM
TQ-00-7070		HYDRAULIC OIL - REGULAR - A/W 46 - 120 GAL	1	KMEM
TQ-00-7110		DIVERTER VALVE, REAR MOUNT DEVICES	1	KMEM
TQ-00-7220		OUTRIGGER HYDRAULIC CONTROL VALVE - RM, PROPORTIONAL	1	KMEM
TQ-00-7430		ELECTRIC TURNTABLE HYDRAULIC CONTROL VALVE, RM PLATFORM	1	KMEM
TQ-00-7505		HYDRAULIC SYSTEM FILTRATION	1	KMEM
TQ-00-8520		REARMOUNT PLATFORM, "IQAN" MOTION CONTROL SYSTEM - ELECTRIC CONTROLS @ TT	1	KMEM
TQ-00-8700		HYDRAULIC PUMP PRESSURE - DISPLAY	1	KMEM
TQ-00-8710		ELEVATION ANGLE OF LADDER - DISPLAY	1	KMEM
TQ-00-8715		VERTICAL HEIGHT OF LADDER - DISPLAY	1	KMEM
TQ-00-8725		DEGREE OF ROTATION FROM VEHICLE CENTERLINE - DISPLAY	1	KMEM
TQ-00-8735		E-ZONE SHORT JACK WARNING - DISPLAY	1	KMEM
TQ-00-8740		CRADLE ALIGNMENT MESSAGE - DISPLAY	1	KMEM
TQ-00-8750		DEVICE LOAD MONITORING - DISPLAY	1	KMEM
TQ-00-8760		E-SPEED LADDER TIP SPEED CONTROL - DISPLAY	1	KMEM
TQ-00-8765		E-CUSH RAMP CONTROL FOR ELEVATION - DISPLAY	1	KMEM

PART NO	S	DESCRIPTION	QTY	ID
TQ-00-8770		E-CUSH RAMP CONTROL FOR EXTENSION & RETRACTION - DISPLAY	1	KMEM
TQ-00-8895		WARNING MESSAGES - TURNTABLE & PLATFORM	1	KMEM
TQ-00-9535		102' PLATFORM, REAR MOUNT, EMERG HYD. PUMP, EPU	1	KMEM
TQ-01-1000		HOT SHIFT PTO W/CONTROLS IN CAB	1	KMEM
TQ-01-1100		FAST IDLE CONTROL FOR ALL AERIAL DEVICES	1	KMEM
TQ-02-0115		102' PLATFORM, REAR MOUNT TORQUE BOX	1	KMEM
TQ-02-1115		102' PLATFORM, REAR MOUNT OUTRIGGERS	1	KMEM
TQ-02-1685		102' PLAT, REAR MOUNT OUTRIGGERS - HORIZONTAL CYLINDER	1	KMEM
TQ-02-1885		102' PLAT, REAR MOUNT OUTRIGGERS - VERTICAL CYLINDERS - EXTENDED STROKE	1	KMEM
TQ-02-2010		EXTENDED OUTRIGGER PENETRATION - 11 DEGREES	1	KMEM
TQ-02-2110		IQAN - OUTRIGGER STRING POTENTIOMETER - FOUR (4) OUTRIGGERS	1	KMEM
TQ-02-2200		OUTRIGGER/JACK FOOT PADS, FOUR (4) JACK DEVICES	1	KMEM
TQ-02-2350		AUXILARY JACK PADS, FOUR (4) 24" X 24" x 1" POLY	1	KMEM
TQ-02-2500		OUTRIGGER INTERLOCK SYSTEM & ALARM, ALL DEVICES	1	KMEM
		****** HEADER - OUTRIGGER LIGHTING, FOUR (4) OUTRIGGERS**	**1**	**KMEM**
TQ-02-5100		NO LOLLIPOP LIGHTS ON OUTRIGGER BEAMS	1	KMEM
TQ-02-5220		HALOGEN OUTRIGGER GROUND LIGHTS - RECTANGLE, 4-OUTRIGGERS	1	KMEM
TQ-02-5275		OUTRIGGER WARNING LIGHTS FROM LIGHT PACKAGE	1	KMEM
TQ-02-6005		OUTRIGGER WARNING LIGHT ACTIVATION, PRIMARY WARNING	1	KMEM
TQ-02-6800		OUTRIGGER SCOTCHLITE, WHITE	1	KMEM
TQ-02-7050		RM PLATFORM, BUTTON OUTRIGGER CONTROLS - FOUR JACKS	1	KMEM
TQ-02-9200		OUTRIGGER LEVEL SIDE TO SIDE, ALL REAR MOUNT DEVICES	1	KMEM
TQ-03-1070		102' PLATFORM, REAR MOUNT, TURNTABLE - 13	1	KMEM
TQ-03-3010		TURNTABLE DECK - ALUMINUM TREADPLATE	1	KMEM
TQ-04-1853		HEEL PIN STEP ON TURNTABLE,102' - 13	1	KMEM
TQ-04-1855		TURNTABLE HANDRAILS, KNURLED ALUMINUM, 3-SIDES	1	KMEM
TQ-04-2125		HEEL PINS- 102' - 13	1	KMEM
TQ-04-2300		STAINLESS STEEL CRADLE ALIGNMENT ARROWS ON TURNTABLE	1	KMEM
TQ-04-2800		SAFETY CHAINS BETWEEN TURNTABLE HANDRAIL, REAR MOUNTS & TDA	1	KMEM
TQ-04-6100		102' PLATFORM, REAR MOUNT, 5" TURNTABLE SWIVEL	1	KMEM
TQ-04-9000		IQAN - SWIVEL ROTATION ENCODER	1	KMEM
TQ-06-0370		102' PLATFORM, REAR MOUNT, LADDER CONSTRUCTION - 13	1	KMEM
TQ-06-1570		102' PLATFORM RM, LADDER DIMENSIONS - 13	1	KMEM
TQ-06-3000		RUNG COVERS - PHOTOLUMINESCENT, ALL DEVICES	1	KMEM
TQ-06-9000		AERIAL TRAVEL SUPPORT, ALL DEVICES	1	KMEM
TQ-06-9045		CRADLE ILLUMINATION LIGHTS - FIRETECH WL1000 LED	1	KMEM
TQ-07-1120		102' PLATFORM, REAR MOUNT, ELEVATION SYSTEM - 13	1	KMEM
TQ-07-2800		IQAN - INCLINOMETER	1	KMEM
TQ-07-2801		IQAN - MOMENT LOAD INDICATOR	1	KMEM
TQ-07-2815		IQAN - E-CUSH CONTROL, ELEVATION SYSTEM - PLATFORM & TURNTABLE	1	KMEM
TQ-07-3020		IQAN LOAD METER TURNTABLE & PLATFORM	1	KMEM
TQ-08-1120		102' PLATFORM, REAR MOUNT, ROTATION SYSTEM - 13	1	KMEM
TQ-08-2830		ROTATION MOTOR AND BRAKE - 50.625" EXTERNAL BEARINGS - 13	1	KMEM
TQ-08-2950		SWING DRIVE ADJUSTMENT	1	KMEM
TQ-08-3050		IQAN - "E-SPEED" SAFETY SYSTEM, PLATFORM & TURNTABLE	1	KMEM
TQ-08-3110		IQAN - "E-ZONE" ROTATION SAFETY SYSTEM, 4-OUTRIGGERS	1	KMEM
TQ-09-1120		102' PLATFORM, REAR MOUNT, EXTENSION/RETRACTION SYSTEM - 13	1	KMEM
TQ-09-2350		EXTENSION CYLINDERS PAINTED LADDER PAINT COLOR	1	KMEM
TQ-09-2800		IQAN - EXTENSION SYSTEM STRING POTENTIOMETER	1	KMEM
TQ-09-2815		IQAN - "E-CUSH" EXTENSION/RETRACTION SYSTEM - PLATFORM & TURNTABLE	1	KMEM
TQ-09-3010		LADDER SLIDE PADS, 102 PLATFORM - 13	1	KMEM
		LADDER EXTENSION NUMBERS, ALL DEVICES	**1**	**KMEM**
TQ-09-3150		LADDER LEVEL INDICATOR (BASE SECTION) - LIGHTED	1	KMEM
TQ-09-3310		PLATFORM, CABLE/HOSE/WIRE ROUTING, 3-SECTIONS - 13	1	KMEM
		****** 2010 - REAR MOUNT PLATFORM CONSTRUCTION - 13 - OPTIONS ******	**1**	**KMEM**
TQ-09-6070		PLATFORM STRUCTURE FINISH - PAINTED TO MATCH LADDER COLOR - 13	1	KMEM
TQ-09-6100		PLATFORM DOORS, HINGED @ REAR, LATCHED @ FRONT SELF CLOSE	1	KMEM
TQ-09-6205		PLATFORM, REAR ACCESS LADDER AND REAR GATE - 13	1	KMEM

PART NO	S	DESCRIPTION	QTY	ID
TQ-09-7105		PLATFORM FLOOR - 13	1	KMEM
TQ-09-7205		PLATFORM MOUNT - 13	1	KMEM
TQ-09-7305		PLATFORM LEVELING SYSTEM - 13	1	KMEM
TQ-09-8000		PLATFORM BOTTOM HEAT SHIELDS, .09" TREAD PLATE	1	KMEM
TQ-09-8100		PLATFORM EXT. HEAT SHIELDS, .09" PAINTED ALUMINUM	1	KMEM
TQ-09-8205		PLATFORM SAFETY BELT LOOPS AND EXTERIOR LIFTING POINTS - 13	1	KMEM
TQ-09-8400		RESCUE LADDER BRACKETS - 13	1	KMEM
		****** HEADER - PLATFORM 120 VOLT ELECTRICAL SYSTEM & ACCESSORIES**	**1**	**KMEM**
TQ-11-3001		PLAT, 120 VOLT ELECTRICAL SYSTEM	1	KMEM
TQ-11-3020		PLAT, TWO (2) 120 VOLT NEMA L5-20R RECEPTACLES IN PLATFORM	1	KMEM
TQ-11-3260		PLAT, FIRE RESEARCH 215 WATT, SPA540-K20 LIGHTS REAR OF PLATFORM	1	KMEM
TQ-11-5045		NO 120V LIGHTS REQUIRED ON FRONT OF PLATFORM	1	KMEM
TQ-11-5130		PLAT, FIRE RESEARCH RECESSED 155 WATT LIGHT BOTTOM OF PLATFORM	1	KMEM
TQ-11-5650		NO 120V LIGHTS REQUIRED ON SIDES OF PLATFORM	1	KMEM
		****** HEADER - RM PLATFORM, 12 VOLT ELECTRICAL SYSTEM & ACCESSORIES**	**1**	**KMEM**
TQ-11-6020		HEEL PIN STEP LIGHTS - TECNIQ EON 3 LED LIGHTS	1	KMEM
TQ-11-6059		TURNTABLE CONSOLE STEP LIGHT - TECNIQ EON 3 LED	1	KMEM
TQ-11-6075		PLATFORM CONSOLE STEP LIGHT - TECNIQ EON 3 LED LIGHT	1	KMEM
TQ-11-6080		TURNTABLE & PLATFORM CONTROL CONSOLE LIGHTING - LUMA BAR LED H2O	1	KMEM
TQ-11-6125		AMBER LED MARKER LIGHTS - PLATFORM	1	KMEM
TQ-11-6212		TWO (2) UNITY LED SPOTS @ LADDER BASE SECTION	1	KMEM
TQ-11-6310		ONE (1) UNITY SPOT & ONE (1) FLOOD @ PLATFORM	1	KMEM
TQ-11-6400		CUTOFF SWITCH FOR PLATFORM 12 VOLT LIGHTS @ TURNTABLE	1	KMEM
TQ-11-8072	>	RM PLATFORM WARNING LIGHTS, CODE 3 PRIZM II 4X6 SERIES LED	1	KMEM
TQ-12-1000		PLATFORM, CONTROL STATIONS	1	KMEM
TQ-12-1060		RM PLATFORM, CONSOLE LOCATED @ LH SIDE OF TURNTABLE, STD	1	KMEM
TQ-12-1095		PAINTED ALUMINUM TURNTABLE CONSOLE - MATCH LADDER COLOR	1	KMEM
TQ-12-1200		102' PLATFORM, REAR MOUNT, TURNTABLE CONTROL STATION	1	KMEM
TQ-12-2520		FIRE RESEARCH INSIGHT FLOWMETER @ TURNTABLE CONSOLE	1	KMEM
TQ-12-2595		TURNTABLE CONSOLE COVER - PAINTED RADIUS	1	KMEM
TQ-12-6000		IQAN - MULIT-PLEX CONTROLLERS FOR PLATFORM	1	KMEM
TQ-12-6610		PLATFORM CONTROL STATION, RIGHT REAR OF PLATFORM	1	KMEM
TQ-12-6635		IQAN - MDM III DISPLAY @ PLATFORM CONTROL STATION	1	KMEM
TQ-12-6650		102' PLATFORM, REAR MOUNT, PLATFORM CONTROL STATION	1	KMEM
TQ-12-7100		PAINTED COVER FOR PLATFORM CONTROLLERS	1	KMEM
TQ-14-2200		PLATFORM, FIRE RESEARCH 2-WAY COMMUNICATION SYSTEM - LOWER CONTROL	1	KMEM
TQ-14-2205		PLATFORM, FIRE RESEARCH 2-WAY COMMUNICATION SYSTEM - UPPER SPEAKER/MIC	1	KMEM
TQ-15-0010		LADDER ANGLE INDICATOR (FLY SECTION) - LIGHTED	1	KMEM
TQ-16-1550	>	DELETE BREATHING AIR SYSTEM, ALL PLATFORM DEVICES	1	KMEM
TQ-18-0355		102' PLATFORM, REAR MOUNT, WATERWAY SYSTEM - 13	1	KMEM
TQ-18-1125		102' PLATFORM, REAR MOUNT, WATERWAY - 13	1	KMEM
TQ-18-2565		5" HEEL PIN SWIVEL - S-PIPES, -12 TO 80 DEGREES - 13	1	KMEM
TQ-18-2600		AUTOMATIC WATER DRAIN/VENT	1	KMEM
TQ-18-3000		ALL DEVICES, WATERWAY RELIEF VALVE	1	KMEM
TQ-18-3015		REAR MOUNT AERIAL WATERWAY DRAIN, 1 1/2" VALVE	1	KMEM
TQ-18-3150		4" NST REAR AERIAL WATERWAY INLET ADAPTER, REAR MOUNTS	1	KMEM
TQ-18-3200		4" NSTF x 4" STORZ KOCHEK SKE-R 30° ADAPTER FOR REAR INLET	1	KMEM
TQ-18-3800		INNOVATIVE CONTROLS 2 1/2" GAUGE FOR AERIAL INLET, REAR MOUNTS	1	KMEM
TQ-18-5020		102' RM PLATFORM, PLATFORM WATERWAY SYSTEM, SINGLE GUN	1	KMEM
TQ-18-5100		SHOWER NOZZLE UNDER PLATFORM (MANUAL)	1	KMEM
		PLATFORM MANUAL TFT VALVE UNDER MONITOR - SINGLE	**1**	**KMEM**
TQ-18-5215		2.5" NH GATED ELBOW LEFT HAND - C1 - VALVE UNDER MONITOR	1	KMEM
TQ-18-5255		BLIND PLUG - C2 - VALVE UNDER MONITOR	1	KMEM
TQ-18-5265		BLIND PLUG - C3 - VALVE UNDER MONITOR	1	KMEM

PART NO	S	DESCRIPTION	QTY	ID
TQ-18-5275		2.5" NH GATED ELBOW RIGHT HAND - C4 - VALVE UNDER MONITOR	1	KMEM
TQ-18-6100	>	PLATFORM, SINGLE AKRON #3481 MONITOR	1	KMEM
TQ-18-6200		PLATFORM, AKRON #5160 NOZZLE	1	KMEM
TQ-20-1150		102' PLATFORM, REAR MOUNT, LADDER CAPACITIES - 13	1	KMEM
TQ-20-3100		102' PLATFORM, WATERWAY CAPACITIES - SINGLE GUN	1	KMEM
TQ-50-0100		FIRE DEPT AERIAL FAMILIARIZATION - PROVIDED BY FACTORY	1	KMEM
TQ-50-0130		FACTORY FAMILIARIZATION - THREE (3) DAYS	1	KMEM
TQ-50-0600		AERIAL SERVICE, ALL DEVICES	1	KMEM
TQ-50-0700		WARNING DECALS, ALL DEVICES	1	KMEM
TQ-52-0100		AERIAL LADDER, MANUALS, TWO (2) SETS	1	KMEM
TQ-70-1105		102' PLATFORM, REAR MOUNT, CERTIFICATION & TESTING - 13	1	KMEM
		****** HEADER - PAINT SECTION - ALL UNITS ******	**1**	**KMEM**
UA-00-1100		GENERAL PAINT DESCRIPTION - ALL	1	KMEM
UA-00-1200		GENERAL PRIMER & PREP DESCRIPTION - LADDER/PLATFORM	1	KMEM
UA-00-1400		GENERAL FINISH PAINT DESCRIPTION - LADDER/PLATFORM	1	KMEM
UA-00-2700		BODY BUFFING & FINISH - LADDER/PLATFORM	1	KMEM
		****** HEADER - LADDER/PLATFORM BODY PAINT ******	**1**	**KMEM**
UA-03-0100		INSIDE/UNDERSIDE BODY PAINTED BLACK - LADDER/PLATFORM	1	KMEM
UA-03-0300		JOB COLOR COMPARTMENT INT W/SPATTER PAINT - LADDER/PLATFORM	1	KMEM
UA-03-0900		SINGLE COLOR BODY PAINT SCHEME - LADDER/PLATFORM	1	KMEM
UA-03-2200		PUMPHOUSE & PLUMBING PAINTED JOB COLOR - LADDER/PLATFORM	1	KMEM
		****** HEADER - TANDEM AXLE CUSTOM CHASSIS PAINT (AERIAL)**	**1**	**KMEM**
UA-05-0050		CUSTOM CAB PRIMER & PREP	1	KMEM
UA-05-0070		CUSTOM FINISH PAINT & PREP	1	KMEM
UA-05-0100		SINGLE COLOR CUSTOM CAB PAINT SCHEME	1	KMEM
UA-05-0350		CUSTOM CAB BUFFING & FINISH	1	KMEM
UA-05-0360		CUSTOM CAB INTERIOR PAINT - TEXTURED GRAY	1	KMEM
UA-05-0400		CUSTOM CHASSIS GLOSS BLACK COLOR FRAME RAILS	1	KMEM
UA-05-0505		CUSTOM CHASSIS WHEEL AND HUB PAINT - TANDEM AXLE	1	KMEM
UA-06-0200		LADDER, PAINTING, ALL DEVICES, WHITE #91528	1	KMEM
UA-06-0450		EXTENSION CYLINDERS PAINTED TO MATCH LADDER COLOR	1	KMEM
UA-06-0905		TORQUEBOX PAINT - BLACK	1	KMEM
UA-06-1100		OUTRIGER PAINT - SILVER URETHABOND 104	1	KMEM
UA-06-1205		TURNTABLE PAINT - LADDER COLOR	1	KMEM
UA-06-1215		TURNTABLE CONSOLE PAINT - LADDER COLOR	1	KMEM
UA-06-1225		LIFT CYLINDERS CONSOLE PAINT - LADDER COLOR	1	KMEM
UA-06-1500		LADDER RUST INHIBITOR - ALL DEVICES	1	KMEM
UA-06-2110	>	PAINT CODE, SINGLE COLOR, FILL IN BLANKS	1	KMEM
UA-06-2130		PAINT CODES, AERIAL DEVICE - WHITE #91528	1	KMEM
UA-06-2200		PINT OF TOUCH-UP PAINT	1	KMEM
UA-06-2510		FINALIZATION & DETAILING - LADDER/PLATFORM	1	KMEM
UA-06-2850		RUSTPROOFING WARRANTY, TEN (10) YEAR	1	KMEM
		****** HEADER, LETTERING & STRIPING - 102-RM-PL**	**1**	**KMEM**
UA-12-0200		DEALER TO SUPPLY LETTERING & DECALS	1	KMEM
UA-12-1200		GOLDLEAF W/ DROP SHADOW LETTERING ON FRONT CAB DOORS	1	DLR
UA-12-1255		CUSTOM LETTERING ON FRONT CAB DOORS	1	DLR
UA-12-1740		GOLDLEAF W/ DROP SHADOW LETTERING ON CREW CAB DOORS	1	DLR
UA-12-1795		CUSTOM LETTERING ON CREW CAB DOORS	1	DLR
UA-12-2600		SCOTCH-CAL W/O DROP SHADOW LETTERING ON FRONT BUMPER	1	DLR
UA-12-2700		GOLDLEAF W/ DROP SHADOW LETTERING ON FRONT OF CAB	1	DLR
UA-12-2755		CUSTOM LETTERING ON FRONT BUMPER	1	DLR
UA-12-3600		SCOTCH-CAL W/O DROP SHADOW LETTERING ON REAR COMPARTMENT DOOR	1	DLR
UA-12-3755		CUSTOM LETTERING ON REAR DOOR	1	DLR
UA-14-1210		CUSTOM FIRE DEPARTMENT LOGO	1	DLR
UA-14-1215		SCOTCH-CAL W/ TWO COLORS - LOGO	1	DLR
UA-14-1235		LOCATION - CUSTOM LOGO	1	DLR
UA-20-0440	>	LETTERING ON BASE RAIL OF AERIAL LADDER	1	KMEM
UA-20-0500		SCOTCH-CAL W/O DROP SHADOW LETTERING FOR AERIAL	1	KMEM
UA-50-0200		NFPA REQUIRED SCOTCH-LITE STRIPINGSTRIPING - TA AERIAL	1	KMEM

PART NO	S		DESCRIPTION	QTY	ID
UA-50-0215			6" SCOTCH-LITE STRIPE ON CAB AND BODY - TA AERIAL	1	KMEM
UA-58-5100			WHITE SCOTCH-LITE	1	KMEM
UA-80-6000			REAR CHEVRON STRIPING	1	KMEM
UA-80-6002			50% VERTICAL SURFACE	1	KMEM
UA-80-6050			6" 50% REAR SCOTCH-LITE DIAMOND GRADE CHEVRON STRIPING	1	KMEM
UA-80-6075			RED & FLUORESCENT YELLOW GREEN DIAMOND GRADE SCOTCH-LITE	1	KMEM
			****** PROPOSED - AERIAL WARRANTY PKG, W/PUMP @ REAR OF SPEC**	**1**	**KMEM**
W6-00-000J			PROPOSED - KME WARRANTY, STARTING ON DELIVERY DATE	1	KMEM
W6-00-0010	**X**	<	PROPOSED - 5 YEAR FCAM WARRANTY - CUSTOM CHASSIS	1	
			$19,500 per email Phil to Byron 9-27-16		
W6-00-003M		>	PROPOSED - 5 YEAR WARRANTY - BASE WITH CUSTOM CHASSIS	1	KMEM
W6-00-0163			PROPOSED - 10 YEAR CUMMINS ISX - EXTENDED WARRANTY	1	KMEM
W6-00-0210			PROPOSED - 5 YEAR ALLISON EVS TRANSMISSION WARRANTY	1	KMEM
W6-00-0230			PROPOSED - LIFETIME FRAMERAIL WARRANTY	1	KMEM
W6-00-0242			PROPOSED - SHEPPARD STEERING GEAR STANDARD - THREE YEAR WARRANTY	1	KMEM
W6-00-0254			PROPOSED - 5 YEAR MERITOR FRONT AXLE - WARRANTY	1	KMEM
W6-00-0266			PROPOSED - 5 YEAR MERITOR 180 SERIES TANDEM AXLE REAR - WARRANTY	1	KMEM
W6-00-0320		>	PROPOSED - 10 YEAR CAB STRUCTURAL WARRANTY	1	KMEM
W6-00-0330			PROPOSED - 10 YEAR BODY STRUCTURAL WARRANTY	1	KMEM
W6-00-0390			PROPOSED - 10 YEAR CAB & BODY CORROSION WARRANTY	1	KMEM
W6-00-0450			PROPOSED - PAINT FINISH WARRANTY, TEN (10) YEAR	1	KMEM
W6-00-0470			PROPOSED - 5 YEAR LETTERING WARRANTY	1	KMEM
W6-00-0490			PROPOSED - 10 YEAR STAINLESS STEEL PIPING WARRANTY	1	KMEM
W6-00-0550			PROPOSED - REAR SUSPENSION - RIDEWELL - AIR RIDE - 3 YEAR WARRANTY	1	KMEM
W6-00-0570			PROPOSED - SAFEGUARD TECHNOLOGY - 10 YEAR - RUNG COVERS	1	KMEM
W6-00-0610			PROPOSED - 20 YEAR AERIAL PLATFORM WARRANTY	1	KMEM
W6-00-0650		>	PROPOSED - TEN 10 YEAR AERIAL WATERWAY WARRANTY - AMITY	1	KMEM
W6-00-0655		>	PROPOSED - TEN 10 YEAR AERIAL WATERWAY WARRANTY	1	KMEM
W6-00-0710			PROPOSED - LIFETIME POLY TANK WARRANTY - ALL TANKS	1	KMEM
W6-00-0820			PROPOSED - WATEROUS 5 YEAR PUMP WARRANTY (PARTS & LABOR)	1	KMEM
W6-00-0823	**X**		WATEROUS FCAM 5 YR WARRANTY CORRECTION	1	
W6-00-1330			PROPOSED - AKRON - 5 YEAR LIMITED WARRANTY	1	KMEM
W6-00-1340			PROPOSED - AKRON HEAVY DUTY VALVE - 10 YEAR WARRANTY	1	KMEM
W6-00-1500			PROPOSED - BOSTROM SEATING 5 YEAR WARRANTY	1	KMEM
W6-00-1600			PROPOSED - SMART POWER HYDRAULIC GENERATORS - 5 YEAR	1	KMEM
W6-01-1153			DEALER FURNISHED PICK-UP & DELIVERY DURING WARRANTY	1	DLR
WA-00-0010			"AERIAL FIRE APPARATUS" NFPA 2016 STATEMENT OF EXCEPTIONS	1	KMEM

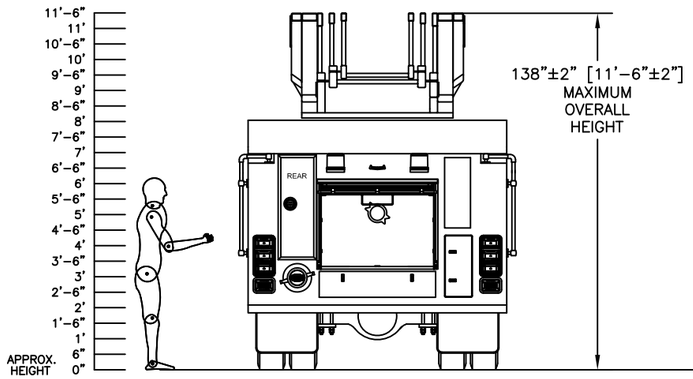

REAR VIEW

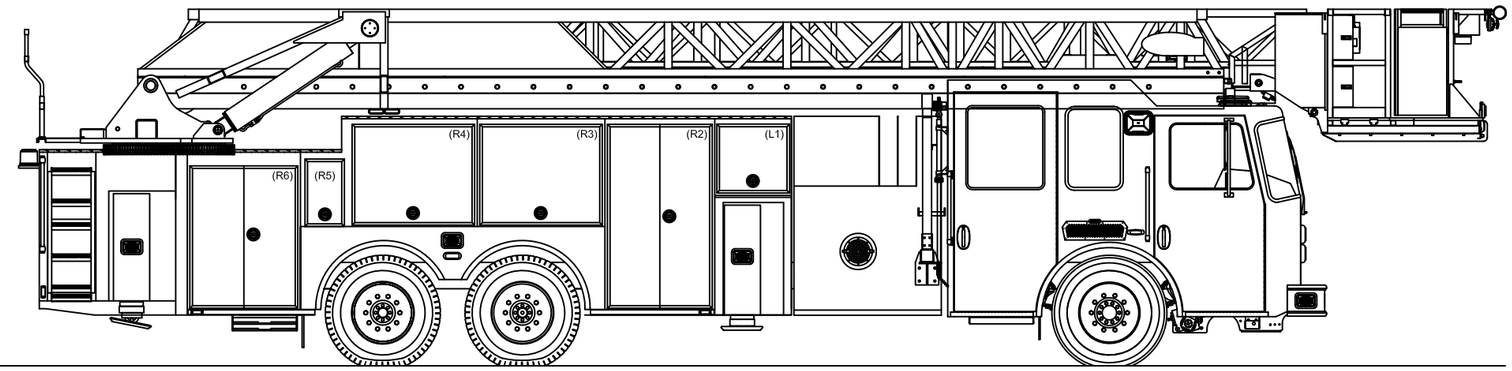

OFFICERS SIDE VIEW

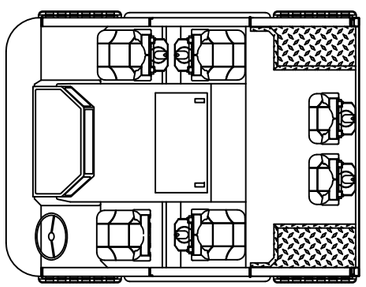

CAB INTERIOR LAYOUT

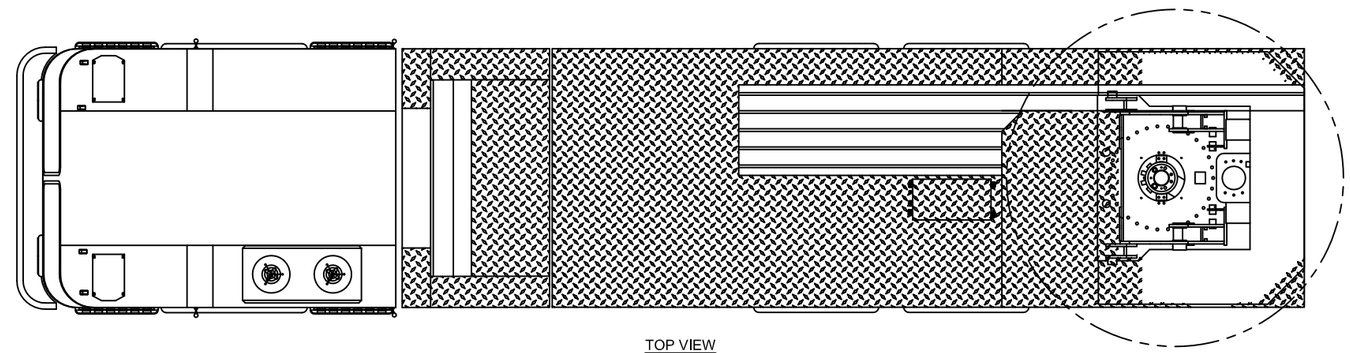

TOP VIEW

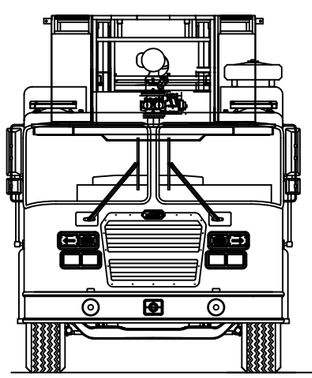

FRONT VIEW

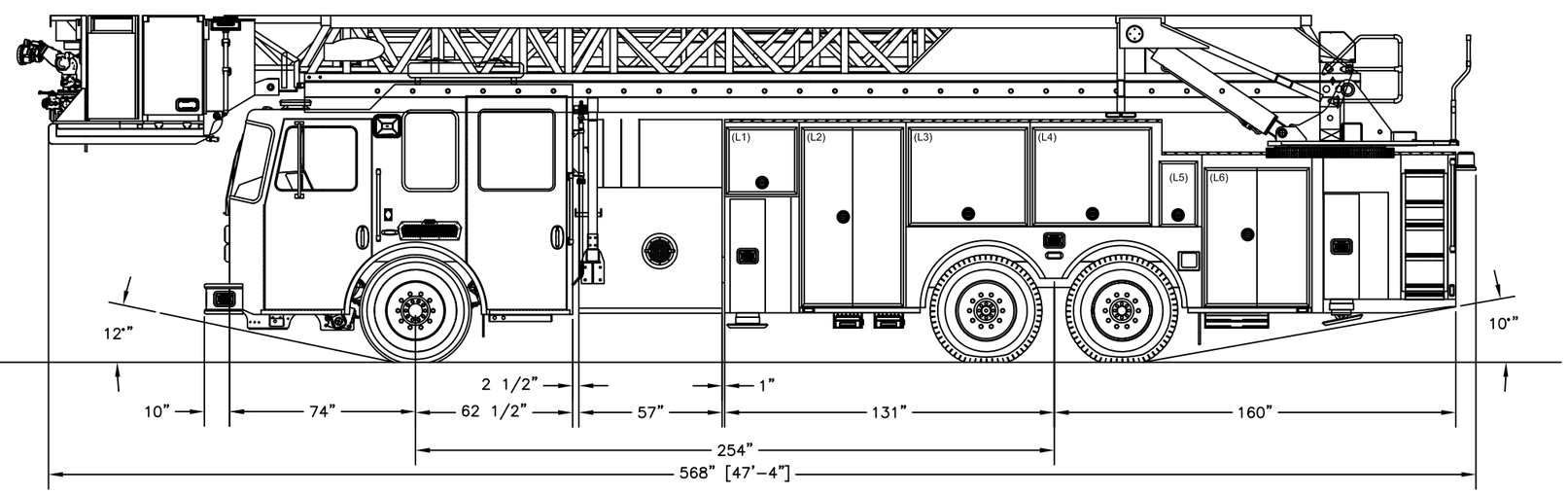

DRIVERS SIDE VIEW

CAB: 100"W PREDATOR MFD 10" RAISED ROOF
ENGINE & TRANS. CUMMINS ISX12 500 HP/ 4000 EVS
AXLES: 23,000# FRONT/60,000# REAR
PUMP: WATEROUS S100 1,500 GPM SINGLE STAGE
WATER TANK: 300 GALLONS
SMART POWER ER 6KW

THIS DRAWING IS A GENERAL CONFIGURATION AND MAY NOT NECESSARILY REFLECT ALL CONTRACTUAL REQUIREMENTS. CONTRACT SPECIFICATIONS SHALL PREVAIL OVER DRAWING.

CUSTOMER APPROVAL:

NAME:

TITLE:

DATE:

SYM	DATE	REVISION DESCRIPTION	APP'D
A			

SALES ENGINEER : TBD

DIMENSIONS ARE APPROXIMATE & MAY VARY DUE TO BUILD ADJUSTMENTS

SCALE	DWG SIZE	DRAWN BY	Z.ZSCHUNKE	DATE
NONE	B	APPROVED BY	P.HOHERCHAK	9-23-16

102' REARMOUNT PLATFORM

MAPC 3 MID RANGE

PROPOSAL DRAWING

KME
ONE INDUSTRIAL COMPLEX - NESQUEHONING, PA 18240

KME

MID RANGE FCAM 100 FOOT

MIDMOUNT AERIAL PLATFORM

“QUINT”

MAPC 4

Quote SO

MAPC/FCAM

MAPC 4 100' MIDDLE RANGE MID MOUNT PLATFOR

Sales Rep:

Terms:

Drawing #:
Est. Delivery Date: / /
Customer PO #:
Customer #:
QPF #:

Penalty:

Quote No: 10508-0010
10/04/2016

PART NO	S	DESCRIPTION	QTY	ID
		== MID MOUNT PLATFORM - 713.016 07/13/16 ==	**1**	**KMEM**
		== LETTERING & STRIPING, 100' 5-SECTION MM - 713.016 07/13/16 ==	**1**	**KMEM**
		== COMPARTMENT ACCESSORIES MIDMOUNT AERIAL - 713.016 07/13/16 ==	**1**	**KMEM**
		== MISC AND LOOSE EQUIPMENT (AERIAL) - 713.016 07/13/16 ==	**1**	**KMEM**
		== AERIAL WARRANTY PACKAGE W/PUMP - 713.016 07/13/16 ==	**1**	**KMEM**
		DEALER ======= DEALER ======= DEALER	**1**	**DLR**
		QUOTE DATA VERSION: 0713.016 - 2016 DATA SET	**1**	**KMEM**
		INDEX OF PART NUMBERS	**1**	**KMEM**
		****** HEADER - CONTRACTS, PROPOSAL FORM, ETC @ FRONT OF SPECS**	**1**	**KMEM**
		****** PROPOSED - AERIAL SPEC BOILERPLATE**	**1**	**KMEM**
04-00-0000		PROPOSED - GENERAL INFORMATION - NFPA 1901	1	KMEM
04-00-0033		PROPOSED - COMPLETION INFO	1	KMEM
04-00-0040		PROPOSED - FMVSS CERTIFICATION	1	KMEM
04-00-0060		PROPOSED - RECORDS	1	KMEM
04-00-0075		PROPOSED - TOP OF THE LINE CHASSIS MULTIPLEX	1	KMEM
04-00-0107		PROPOSED - GENERAL CONSTRUCTION - AERIAL	1	KMEM
04-00-0120		PROPOSED - SINGLE LINE RESPONSIBILITY	1	KMEM
04-00-0130		PROPOSED - PRODUCT LIABILITY - $30,000,000.00	1	KMEM
04-00-0170		PROPOSED - CRITERIA & CODE CONFORMANCE - AERIAL	1	KMEM
04-00-0193		PROPOSED - PAINT PERFORMANCE CERTIFICATION	1	KMEM
04-00-0490		PROPOSED - PRICES & PAYMENTS	1	KMEM
04-00-0540		PROPOSED - BOND REQUIREMENTS	1	KMEM
04-00-0560		PROPOSED - PERFORMANCE BOND	1	KMEM
04-00-0580		PROPOSED - NON-COLLUSION AGREEMENT	1	KMEM
04-00-0630		PROPOSED - MATERIAL & WORKMANSHIP	1	KMEM
04-00-0660		PROPOSED - CONTRACT SPECIALIST	1	KMEM
04-00-0680		PROPOSED - APPROVAL DRAWING	1	KMEM
04-00-1200		PROPOSED - DELIVERY	1	KMEM
04-00-1215		PROPOSED - INSTRUCTION MANUALS, TWO (2) SETS - CD	1	KMEM
04-00-1215	**X**	POWERPOINT DELIVERY - PROPOSAL FCAM AERIAL	1	
04-00-1300		PROPOSED - VEHICLE FLUIDS PLATE	1	KMEM
04-00-1500		PROPOSED - MANUFACTURE GENERATED EXACT BLUEPRINT WITH BID	1	KMEM

PART NO	S	DESCRIPTION	QTY	ID
04-00-1521	X	PROPOSED - KME and BULLDOG FAMA MEMBERSHIP	1	
04-00-1540		PROPOSED - MANUFACTURED IN THE UNITED STATES	1	KMEM
04-00-1550		PROPOSED - ISO 9001 QUALITY MANAGEMENT SYSTEM	1	KMEM
04-00-1570		PROPOSED - NFPA TREAD PLATE CERTIFICATION	1	KMEM
07-00-0015		"AERIAL FIRE APPARATUS" NFPA 2016 CHAPTERS OF COMPLIANCE	1	KMEM
08-00-0000		VEHICLE DATA PLATE DESCRIPTION	1	KMEM
14-00-0000		NFPA ROLLOVER STABILITY GENERAL STATEMENT	1	KMEM
15-00-0010	>	PROPOSED - PRINCIPAL APPARATUS DIMENSIONS & GVWR	1	KMEM
15-00-0050		!!! CRITICAL OVERALL HEIGHT REQUIREMENT !!! - "NO"	1	KMEM
15-00-0150		!!! CRITICAL OVERALL LENGTH REQUIREMENT !!! - "NO"	1	KMEM
AA-00-002A		SERVICE CENTER - PROPOSAL FCAM	1	DLR
BA-00-0325		MM PLATFORMS	1	KMEM
BA-00-3000		SEAT AND SEAT BELT ANCHOR TESTING	1	KMEM
BA-01-1410		<1> 100'-5-MM-PL WITH PUMP	1	KMEM
BA-01-3800		<2> TRAVEL HEIGHT 119", 100-5-MM-PL LOW BODY (WITH PUMP)	1	KMEM
BA-02-0715		<3> MM-PL PREDATOR -TANDEM AXLE	1	KMEM
BA-04-0195		AERIAL CHASSIS, MID-MOUNT PLATFORM -TANDEM AXLE (HEAVY)	1	KMEM
		****** HEADER - 100" PREDATOR CAB ******	**1**	**KMEM**
BA-04-0805		PREDATOR CAB - BASE, 100"	1	KMEM
BA-04-0850		PREDATOR CAB - BASE - ALUMINUM CONSTRUCTION	1	KMEM
BA-04-0990		PREDATOR 100" - CRASH TESTING	1	KMEM
BA-04-0995		PREDATOR 100" - 120,000# ROOF & SIDE TESTING	1	KMEM
BA-04-1300		PREDATOR 100" - MFD CAB LENGTH (DIM - 62 1/2")	1	KMEM
BA-04-1900		PREDATOR 100" - VISTA DIMENSIONS FRONT SEATING & ENGINE ENCLOSURE	1	KMEM
BA-04-4000		10" RAISED ROOF - 100" PREDATOR	1	KMEM
BA-04-5000		CAB ROOF DRIP RAIL 100" PREDATOR/PANTHER	1	KMEM
BA-05-0260		BATTERY ACCESS DOORS - REAR STEP WELLS, EACH SIDE	1	KMEM
BA-05-0610		BARRIER HEIGHT CAB DOORS, 100" PREDATOR "MFD, LFD & X-LFD"	1	KMEM
BA-05-0650		CAST ANTI-SLIP ENTRY STEPS FOR REDUCED LENGTH CAB DOORS	1	KMEM
BA-05-0700		CAB DOORS - BOLT ON WEATHER STRIP	1	KMEM
BA-05-1015		PREDATOR DOOR LATCHES, HD LOOP STYLE LATCH - BARRIER HEIGHT DOORS	1	KMEM
BA-05-1035		LOCKING CAB DOOR , OUT + IN, LOOP STYLE LATCH	1	KMEM
BA-05-1037		KEY MODEL #2001	1	KMEM
BA-05-1103		WINDOWS, MANUAL HAND CRANK STYLE - 100"	1	KMEM
BA-05-1130		DOOR WINDOW TRIM EXTRUSION, 4 - DOOR	1	KMEM
BA-05-1310		UPPER INTERIOR DOOR PANELS - ABS, 4-DOOR	1	KMEM
BA-05-1410		BRUSHED ALUMINUM DOOR SCUFF PLATES, 4 - DOOR	1	KMEM
BA-05-1510		SCOTCHLITE MATERIAL ON INTERIOR OF DOOR PANEL 4-DOORS	1	KMEM
		****** HEADER - CAB EXTERIOR ACCESSORIES & OPT, 100" PREDATOR**	**1**	**KMEM**
BA-05-2410		WINDSHIELD, 100" PREDATOR CAB	1	KMEM
BA-05-2425		WINDSHIELD WIPERS & WASHERS - 100" PREDATOR	1	KMEM
BA-05-2450		SIDE VIEWING WINDOWS NON-SLIDING - PREDATOR	1	KMEM
BA-05-2500		DARK TINT WINDOWS, SIDE VIEWING, REAR DOORS & REAR WALL	1	KMEM
BA-05-2600		GRAB RAILS EXTERIOR, KNURLED ALUMINUM EXTRUSION	1	KMEM
BA-05-2668		PREDATOR INTERIOR GRAB HANDLES - WHEELABRATED	1	KMEM
BA-05-2692		INTERIOR "A" POST GRAB HANDLE "PREDATOR" - WHEELABRATED	1	KMEM
BA-05-2715		FRONT CAB GRILLE - FORMED STAINESS STEEL MIRROR FINISHED - 100" PREDATOR	1	KMEM
BA-05-2780		FRONT CAB GRILLE SCREEN - BLACK MESH - 100" PREDATOR/PANTHER	1	KMEM
BA-05-2815		SIDE CAB GRILLES - SHAPED BRIGHT FINISHED - 100" PREDATOR	1	KMEM
BA-05-2880		SIDE CAB GRILLE SCREEN - BLACK MESH - PREDATOR/PANTHER	1	KMEM
BA-05-2900		ALUMINUM CAB WHEEL LINERS	1	KMEM
BA-05-2910		ALUMINUM CAB FENDERETTES	1	KMEM
BA-05-3000		FRONT MUD FLAPS	1	KMEM
BA-05-3500		VELVAC MIRRORS " WEST COAST" HEATED / REMOTE - W/CONVEX SPOT	1	KMEM
BA-05-3690		MIRROR CONTROL IN MULTIPLEX CONTROL SCREEN	1	KMEM
BA-05-5115		INTERIOR TRIM, 100" PREDATOR	1	KMEM
BA-05-5180		CUSTOM CAB INTERIOR PAINT - TEXTURED GRAY	1	KMEM

PART NO	S	DESCRIPTION	QTY	ID
BA-05-5200		PREDATOR REAR INTERIOR CAB WALL, GRAY DURAWEAR UPHOLSTERY	1	KMEM
BA-05-5335		TREAD PLATE KICK PLATE ON LOWER INTERIOR REAR WALL	1	KMEM
BA-05-5530	>	STORAGE COMPARTMENTS UNDER FRONT SEATS - 100" PREDATOR	1	KMEM
BA-05-5610		BARYFOL FLOORING	1	KMEM
BA-05-5650		1" ACOUSTICAL INSULATION	1	KMEM
BA-05-5824		ENGINE ENCLOSURE 100" PREDATOR FAB DASH (DURAWEAR)	1	KMEM
BA-05-5860		ENGINE ENCLOSURE MATERIAL - ALUMINUM CAB	1	KMEM
BA-05-7040		SUN VISORS, 100" PREDATOR CAB, PADDED VINYL	1	KMEM
BA-06-0400	>	DELETED - TOP ROLLOVER PROTECTION SYSTEM	1	KMEM
		****** HEADER - CAB SEATING & ACCESSORIES, 100" - PREDATOR MFD**	**1**	**KMEM**
		****** SEATING OPTIONS USSC, 100" - PREDATOR - MFD - NON ROLLTEK**	**1**	**KMEM**
BA-06-329H		DRIVERS SEAT, USSC AIR SUSPENSION, ABTS	1	KMEM
BA-06-389K		OFFICERS SEAT, USSC - FIXED BASE, SCBA, ABTS	1	KMEM
BA-06-3910		ZICO ULLH SCBA BOTTLE BRACKET - OFFICER'S SEAT	1	KMEM
		MFD CAB - REAR FACING USSC SEATS - NON ROLLTEK	**1**	**KMEM**
BA-06-414H		USSC SCBA ABTS REAR FACING, OUTBOARD, DS	1	KMEM
BA-06-4180		ZICO ULLH SCBA BOTTLE BRACKET - OUTBOARD, DS	1	KMEM
BA-06-424H		USSC SCBA ABTS REAR FACING, OUTBOARD, OS	1	KMEM
BA-06-4280		ZICO ULLH SCBA BOTTLE BRACKET - OUTBOARD, OS	1	KMEM
		MFD CAB - FORWARD FACING USSC SEATS - NON ROLLTEK	**1**	**KMEM**
BA-06-7200		**** DELETE FORWARD FACING SEAT RISER - NOT REQUIRED	1	KMEM
BA-06-8055		NO SCBA PARADE COVERS SUPPLIED	1	KMEM
BA-06-8150		USSC SEATING MATERIAL - BLACK CORDURA	1	KMEM
		****** HEADER - VEHICLE DATA RECORDER SYSTEMS**	**1**	**KMEM**
BA-06-9103	>	CLASS ONE SEAT BELT WARNING SYSTEM - UP TO 6 POSITIONS - ULTRAVIEW DISP	1	KMEM
BA-06-9115		FOUR (4) SEATING POSITIONS	1	KMEM
BA-06-9250	>	HELMET HOLDERS - IN CAB - ZICO	4	KMEM
BA-06-9310		CLASS ONE VEHICLE DATA RECORDER - MULTIPLEX	1	KMEM
		****** HEADER - CAB INTERIOR ACCESSORIES & OPTIONS, 100" PREDATOR**	**1**	**KMEM**
BA-07-7010	>	STANDARD #MATM RADIO ANTENNA INSTALLED	1	KMEM
		****** HEADER - INSTRUMENTATION & CONTROLS, 100" PREDATOR - NARROW VISTA**	**1**	**KMEM**
BA-08-0214		DASH & CENTER CONSOLE - 100" PREDATOR FAB DASH (UPHOLSTERED)	1	KMEM
BA-08-0275		INSTRUMENT PANEL, 100" PREDATOR - NARROW	1	KMEM
BA-08-0300		INTER AXLE LOCK CONTROL SWITCH	1	KMEM
BA-08-0315		DIESEL EXHAUST FLUID LEVEL GAUGE	1	KMEM
BA-08-0320		ENGINE COMPRESSION BRAKE CONTROLS	1	KMEM
BA-08-0620		ULTRAVIEW 450 DISPLAY ON CAB DASH FOR ES-KEY SYSTEM	1	KMEM
BA-08-1220		INDICATOR CLUSTER, 100" PREDATOR	1	KMEM
BA-08-1225		"INTER AXLE LOCK" INDICATOR CLUSTER	1	KMEM
BA-08-1235		"ATC DISABLED" INDICATOR CLUSTER	1	KMEM
BA-08-1240		"ATC ACTIVE" INDICATOR CLUSTER	1	KMEM
BA-08-1265		"OUTRIGGERS NOT STOWED" INDICATOR ON DASH	1	KMEM
BA-08-1800		LOWER RIGHT AUXILIARY SWITCH PANEL - PREDATOR - FAB	1	KMEM
BA-08-1900		PUMP SHIFT CONTROL ON LOWER LEFT DASH PANEL	1	KMEM
BA-08-1950		MULTIPLEX CONTROL PUMP SHIFT SWITCH - MULTIPLEX	1	KMEM
BA-08-2000		AERIAL LADDER, LADDER POWER/PTO SWITCHES IN CAB	1	KMEM
BA-08-2750		PREDATOR COMPUTER TERMINAL IN FRONT OF OFFICER (FABRICATED)	1	KMEM
BA-08-2905		OVERHEAD ABS PANEL, FLAT FACED, 100" PREDATOR	1	KMEM
BA-08-3105		HEATER/DEFROSTER & ACCESS, PREDATOR 100" - 10" RAISED ROOF	1	KMEM
BA-08-6900		HVAC CONTROL SYSTEM - INCOPORATED INTO MULTIPLEX CONTROL DISPLAY	1	KMEM
BA-08-9000		CAB TILT SYSTEM & OPTIONS	1	KMEM
BA-08-9110		PARKING BRAKE/CAB TILT INTERLOCK	1	KMEM
		FRAME & AXLE PACKAGE, MID-MOUNT TANDEM AXLE CHASSIS	**1**	**KMEM**
BA-09-5500		110,000 PSI FRAME: MID-MOUNT AERIAL CHASSIS, SPECIAL FRAME	1	KMEM
		HEADER - FRONT BUMPER, EXTENSIONS & ACCESSORIES	**1**	**KMEM**
BA-10-0057	>	BUMPER 12" PAINTED 3/8" STEEL BUMPER - ALL CABS	1	KMEM
BA-10-0110		10" FRONT BUMPER EXTENSION WITH TREAD PLATE GRAVEL SHIELD	1	KMEM

PART NO	S	DESCRIPTION	QTY	ID
BA-10-0405		TREADPLATE GRAVEL SHIELD STANDARD INSTALLATION	1	KMEM
BA-10-2010		TWO (2) PAINTED TOW HOOKS BELOW FRONT BUMPER	1	KMEM
BA-14-0170		23,000# FRONT AXLE MERITOR MFS-20-133A-N	1	KMEM
BA-14-1110		MERITOR, EX-225 17" DISC BRAKES, FRONT AXLE, W/ AUTO SLACK ADJUSTMENT	1	KMEM
BA-14-2040		SUSPENSION FRONT - 23,000# AXLES	1	KMEM
BA-14-2110		FRONT AXLE SHOCK ABSORBERS - MONROE "MAGNUM - 70"	1	KMEM
BA-15-1060		58,000# TANDEM REAR AXLE MERITOR RT-58-185	1	KMEM
BA-15-1505		16.5" X 8.6" S-CAM BRAKES - MERITOR REAR TANDEM W/ AUTO SLACK ADJ.	1	KMEM
BA-15-2810		VEHICLE TOP SPEED - 2016 NFPA STATEMENT	1	KMEM
BA-15-4640	>	RIDEWELL "DYNALASTIC" 202S RUBBER BLOCK SUSPENSION, TANDEM AXLE 58,000#	1	KMEM
		****** HEADER - BRAKE SYSTEM, TANDEM AXLE VEHICLE**	**1**	**KMEM**
BA-20-1005		BRAKE SYSTEM, TA CHASSIS	1	KMEM
BA-20-1110		ABS BRAKING FOR TANDEM REAR AXLE CHASSIS	1	KMEM
BA-20-1275	>	ELECTRONIC STABILITY CONTROL (ESC) WITH (ATC) - CUSTOM TA	1	KMEM
BA-20-1530		AIR RESERVOIRS 7100 CU IN TA, BASE	1	KMEM
BA-20-2025		1/4 TURN DRAIN VALVES ON ALL AIR TANKS	1	KMEM
BA-20-3000		AIR DRYER, HEATED - BENDIX AD-9 12VOLT	1	KMEM
BA-20-5005		COLOR CODED SYNFLEX BRAKE LINES W/QUICK RELEASE FITTINGS - TA	1	KMEM
BA-20-5500		AIR COMPRESSOR -WABCO 18.7 CFM- STD. FOR ALL CUMMINS ENGINES	1	KMEM
BA-20-5810		BRAKE TREADLE VALVE	1	KMEM
BA-20-6010		PARKING BRAKE CONTROL - NEAR DRIVER - ALL WHEEL LOCK	1	KMEM
		HEADER, TIRE AND WHEEL OPTIONS	**1**	**KMEM**
		HEADER, WHEELS, 23,000 FRONT AXLE - ALUMINUM	**1**	**KMEM**
BA-25-1010		FRONT WHEELS, MILL ALUMINUM DISC TYPE - PAINTED 22.5 X 13, 24,390#	1	KMEM
BA-25-1020		FRONT WHEELS, LUG AND HUB TRIM (MILL ALUM WHEELS)	1	KMEM
BA-25-2030	>	FRONT, GOODYEAR 425/65R22.5 L 24,400# G296 MSA MIXED - 68MPH	1	KMEM
BA-25-2400		GOODYEAR - FIRE SERVICE RATING - TIRE RESTRICTIONS	1	KMEM
		HEADER, TIRES & WHEELS, 58,000 TANDEM REAR AXLE	**1**	**KMEM**
BA-25-5015	>	REAR WHEELS, STEEL DISC TYPE, 22.5 X 9, TA	1	KMEM
BA-25-5040		REAR WHEELS, LUG AND HUB TRIM, TA (STEEL)	1	KMEM
BA-25-7055	>	REAR, GDYR 315/80R22.5 J 64,000# RHD II+ TRACTION - 75MPH, TA	1	KMEM
BA-25-7400		GOODYEAR - FIRE SERVICE RATING - TIRE RESTRICTIONS	1	KMEM
BA-25-9905		TIRE PRESSURE MONITORING - LED VALVE STEM CAPS - TEN TIRES	1	KMEM
		100" PREDATOR - ENGINE PACKAGE, MID-MOUNT TANDEM AXLE CHASSIS	**1**	**KMEM**
		****** 100" - HEADER, ENGINE & ENGINE COMPONENTS**	**1**	**KMEM**
BA-30-3195	>	CUMMINS ISX12 - 450 HP @ 1800 RPM TQ 1550 lb-ft @ 1100 - PREDATOR NARROW	1	KMEM
BA-30-9810		PROPOSED - ENGINE CERTIFICATION CUSTOM CHASSIS	1	KMEM
BA-32-0035		COOLING/RADIATOR, 100" PREDATOR - NARROW	1	KMEM
BA-32-0070		ENGINE COOLANT FILTER - CUMMINS ISC - ISX	1	KMEM
BA-32-0085		COOLING SYSTEM CRITERIA	1	KMEM
BA-32-0100		TRANSMISSION COOLER	1	KMEM
BA-32-0120		RADIATOR SKID PLATE	1	KMEM
BA-32-0160		CHARGED AIR COOLER (FRONT MOUNT)	1	KMEM
BA-32-0245		COOLANT FAN, W/CLUTCH - CUMMINS ISX12	1	KMEM
BA-32-0340		HEATER AND COOLANT HOSES/PIPING	1	KMEM
BA-32-0420		LOW COOLANT INDICATOR LIGHT AND ALARM IN CAB	1	KMEM
BA-33-0020	>	SECONDARY BRAKING - ENGINE COMPRESSION BRAKE	1	KMEM
BA-33-0150		FAST IDLE CONTROL FOR ALL ELECTRONIC ENGINES - SMART WHEEL	1	KMEM
BA-33-0160		ENGINE AIR CLEANER	1	KMEM
BA-33-0180		SPARK ARRESTOR	1	KMEM
BA-33-0200		ACCELERATOR PEDAL - FLOOR MOUNT	1	KMEM
BA-33-0250		REMOTE THROTTLE & INTERLOCK HARNESS	1	KMEM
BA-40-0300		ALLISON 4000EVS TRANS. - COMPRESSION BRAKE	1	KMEM
BA-40-0660		FIVE (5) SPEED AUTOMATIC TRANSMISSION - 4000 SERIES	1	KMEM
BA-40-0700		ALLISON TRANSMISSIONS, ELECTRONIC TOUCH PAD SHIFTER IN CAB	1	KMEM
BA-40-0855		TRANSMISSION OIL LEVEL SENSOR	1	KMEM

PART NO	S	DESCRIPTION	QTY	ID
BA-40-0860		ALLISON PARK TO NEUTRAL	1	KMEM
BA-40-0910		ALLISON PRESELECT PROGRAMMING	1	KMEM
BA-40-0920		PRESELECT PROGRAMMED FOR 4TH GEAR	1	KMEM
BA-40-4720		TES-389 TRANS FLUID 4000EVS TRANSMISSION	1	KMEM
BA-45-0110		DRIVE LINES DANA-SPICER #1810 SERIES	1	KMEM
BA-49-0100		DIESEL EXHAUST FLUID TANK - 5 GALLON	1	KMEM
BA-50-0110		EXHAUST SYSTEM - DPF & SCR SYSTEM - INLINE SYSTEM	1	KMEM
BA-50-0155		ALUMINIZED STEEL EXHAUST TAILPIPE/OUTLET OS - DPF + SCR SYSTEM	1	KMEM
BA-50-2500		FUEL SYSTEM	1	KMEM
BA-50-2515	>	FUEL TANK - 65 GALLON, STEEL - ALL MID-MOUNTS	1	KMEM
BA-50-2625		FUEL LINES - FIBER REINFORCED HOSE	1	KMEM
BA-50-2645	>	CUMMINS FUEL-WATER SEPARATOR	1	KMEM
BA-50-2670		FUEL PUMP SECONDARY ELECTRIC, REQ. ON 210" W-B OR LONGER	1	KMEM
BA-50-2700		FUEL POCKET, LEFT SIDE REAR WHEEL WELL PANEL	1	KMEM
BA-50-5050	>	STEERING - DUAL SHEPPARD POWER STEERING GEARS	1	KMEM
BA-50-7115		STEERING COLUMN - CLOCK SPRING "NARROW"	1	KMEM
BA-50-7155		18" STEERING WHEEL - 4 SPOKE - "NARROW"	1	KMEM
BA-50-7170		SMART WHEEL CONTROLS ON STEERING WHEEL	1	KMEM
BA-50-9000		ROAD SAFETY KITS	1	KMEM
		****** HEADER, MM PLATFORM CHASSIS ELECTRICAL, 100" PREDATOR (OPTIONS)**	**1**	**KMEM**
		****** HEADER, MM PLATFORM W/ PUMP BODY ELECTRICAL (OPTIONS)**	**1**	**KMEM**
BE-01-0005		PREDATOR CHASSIS ELECTRICAL SYSTEM DESCRIPTION	1	KMEM
BE-01-0105		PREDATOR CHASSIS WIRING INSTALLATION	1	KMEM
BE-01-0150		DIRECT BATTERY GROUNDING STRAP - PREDATOR	1	KMEM
BE-01-0153		EMI/RFI PROTECTION	1	KMEM
BE-01-0205		PREDATOR 12 VOLT ELECTRICAL SYSTEM TESTING	1	KMEM
BE-05-0353		CLASS-1 ES-KEY MULTI-PLEXED ELECTRICAL SYSTEM 100" PREDATOR	1	KMEM
BE-05-0450		CLASS-1 ES-KEY ULTRAVIEW 450 DISPLAY	1	KMEM
BE-05-0800		INTER-LOCK MODULE FOR MULTIPLEX SYSTEM	1	KMEM
BE-05-0900		CHASSIS DIAGNOSTICS SYSTEM	1	KMEM
BE-05-1160		VOLTAGE MONITORING SYSTEM - 12 VOLT	1	KMEM
BE-05-1165		INDICATOR LIGHT AND ALARM PROVE-OUT SYSTEM	1	KMEM
BE-05-1170		SEQUENCER	1	KMEM
BE-05-1175		ELECTRICAL HARNESS INSTALLATION - 12 VOLT	1	KMEM
BE-10-0487		DELCO REMY 40SI, 320 AMP BRUSHLESS ALTERNATOR	1	KMEM
BE-15-0680		BATTERIES - FIVE (5) EXIDE GROUP 31, 925CCA	1	KMEM
BE-15-1105		PREDATOR BATTERY STORAGE, STEEL, MFD, XMFD, LFD, XLFD	1	KMEM
BE-15-1500		BATTERY DISCONNECT SWITCH, ALL UNITS	1	KMEM
BE-15-1555		COLE HERSEE BATTERY JUMPER STUDS, DS BATTERY BOX	1	KMEM
BE-20-1615		120 VOLT RECEPTACLE FOR ON-BOARD BATT. CHARGER - CUSTOM	1	KMEM
BE-20-1715		SHORELINE RECEPTACLE LABEL - NFPA	1	KMEM
BE-20-1750		SHORELINE LOCATION - ADJACENT TO DRIVER'S DOOR	1	KMEM
BE-20-2000		KUSSMAUL MODEL 1200, 40AMP, BATTERY CHARGER	1	KMEM
BE-30-0100		CONTROL SWITCHING - EATON MULTIPLEX SWITCHES - 12 ABOVE DRIVER	1	KMEM
BE-30-0120		CONTROL SWITCHING - EATON MULTIPLEX SWITCHES - 9 LOWER PANEL	1	KMEM
BE-30-2500		CONTROL SWITCHING LABELING	1	KMEM
BF-00-0515		WELDON #8080-8000-13 WHITE/RED LED INTERIOR LIGHTS (4)	1	KMEM
BF-00-5000		DOOR OPEN INDICATOR W/ INTEGRAL AUDIBLE ALARM	1	KMEM
		****** HEADER, 12V POWER/ USB CHARGING/ POWER - GROUND CIRCUITS, CUSTOM ******	**1**	**KMEM**
BF-01-6000		12 VOLT POWER AND GROUND CIRCUIT FOR ACCESSORIES IN DASH	1	KMEM
		****** HEADER, REAR/SIDE VISION CAMERA SYSTEMS ******	**1**	**KMEM**
BF-20-0000		DUAL HEADLIGHTS, HALOGEN, PREDATOR - DUAL BEZELS	1	KMEM
BF-20-0320		DAYTIME RUNNING LIGHTS, ALL CABS	1	KMEM
BG-00-0055		DUAL MODULE w/ CODE 3 65STA LED TURN SIGNAL & REQ WARN LIGHT	1	KMEM
BG-00-0430		CUST MM PLATFORM CHASSIS LED MARKER LIGHTS	1	KMEM
BG-00-0530		CUST MM PLATFORM BODY LED MARKER LIGHTS	1	KMEM
BG-00-1200		WHELEN LED MARKER LIGHTS @ TOP FRONT ROOF EDGE OF CAB	1	KMEM
BG-00-1600		TRUCK-LITE MARKER LIGHTS @ EA SIDE OF CAB, ADJACENT TO DRIVER DOOR	1	KMEM

PART NO	S	DESCRIPTION	QTY	ID
BG-00-1610		TRUCK-LITE MARKER/TURN LIGHTS @ EA SIDE OF BODY	1	KMEM
BG-00-1650		TRUCK-LITE MARKER LIGHTS @ REAR OF BODY - MM PLAT	1	KMEM
BG-00-1800		TRUCK-LITE DOT AMBER REFLECTORS @ SIDE OF BODY	1	KMEM
BG-00-1810		TRUCK-LITE DOT RED REFLECTORS @ REAR OF BODY	1	KMEM
BG-00-2915		TECNIQ #L10 LED LICENSE PLATE LIGHT @ DS REAR OF BODY	1	KMEM
BG-02-2527		CODE 3, #65 LED BRAKE & TURN W/ HAL REVERSE TRI HOUSING	1	KMEM
BH-04-1050		CAB STEP LIGHTS, TECNIQ EON 3 LED, ALL DEVICES	4	KMEM
BH-04-1130		BODY STEP LIGHTS, TECNIQ EON 3 LED, ALL DEVICES	4	KMEM
BH-05-2310		AERIAL ACCESS LADDER ILLUMINATION - WHELEN 3" LED - MM BODY	1	KMEM
	>	****** HEADER, HOSE BED LIGHTING ******	**1**	**KMEM**
BH-06-0100		UNITY HOSE BED LIGHTS, ALL DEVICES	1	KMEM
BH-06-2200		HOSE BED WORK LIGHT - SWITCH	1	KMEM
		****** HEADER, SCENE LIGHTS - MM / TDA**	**1**	**KMEM**
		****** HEADER, SCENE LIGHTS - MM PLATFORM W/ PUMP**	**1**	**KMEM**
BH-11-0500		NFPA (4) JW SPEAKER LED RECTANGLE GROUND LIGHTS, BELOW CAB DOORS	1	KMEM
BH-11-0560		GROUND LIGHTS, 2 LED BELOW PUMP PANEL RUNNING BOARD - RH	1	KMEM
BH-11-0585		GROUND LIGHTS, 2 LED, AT REAR BODY CORNERS - RH	1	KMEM
BH-11-3750		CAB AND BODY GROUND LIGHTS ACTIVATE WITH PARKING BRAKE	1	KMEM
BH-11-3765		CAB AND BODY GROUND LIGHTS - SWITCH @ IN CAB	1	KMEM
		****** HEADER, BROW AND CAB RADIUS LIGHTS - CUSTOM CHASSIS**	**1**	**KMEM**
		****** HEADER, TELESCOPING LIGHTS, REAR OF CAB - CUSTOM CHASSIS**	**1**	**KMEM**
BI-00-0200		AERIAL BODY ELECTRICAL SYSTEM	1	KMEM
BI-00-0205		AERIAL BODY ELECTRICAL JUNCTION COMPARTMENT	1	KMEM
BI-00-0215		MID-MOUNT, AERIAL DEVICE ELECTRICAL JUNCTION COMPARTMENT	1	KMEM
BI-00-0525		BODY ELECTRICAL HARNESS - ES-KEY	1	KMEM
BJ-00-5115		PUMP ENCLOSURE WORK LIGHTS - TECNIQ LED	1	KMEM
BJ-00-5165		ENGINE COMPARTMENT WORK LIGHTS - TECNIQ LED	1	KMEM
		COMPARTMENT LIGHTS - MID MOUNT TANDEM AXLE	**1**	**KMEM**
BJ-02-1055	>	COMPT. LIGHTS, TECNIQ E18 LED	11	KMEM
		****** CUSTOM MID MOUNT AERIAL NFPA WARNING LIGHT PACKAGE**	**1**	**KMEM**
BL-95-0000		NFPA COMPLIANT WARNING LIGHT PACKAGE - ALL UNITS	1	KMEM
BL-95-0100		LIGHT PACKAGE ACTUATION/CONTROLS - ALL UNITS	1	KMEM
BL-98-0000		WARNING LIGHT FLASH PATTERN - NFPA FLASH PATTERN	1	KMEM
BM-00-0204		CODE 3 UPPER PACKAGE - CUSTOM MID MOUNT AERIAL	1	KMEM
BM-02-0086	>	A-UPPER, CODE 3 LED 2780NFPA P1, RX 2700 80" PRIZM II BAR	1	KMEM
BM-02-1000		C-UPPER, CODE 3 HALOGEN 550 BEACONS, RED DRIVER, AMBER OFFICER	1	KMEM
BM-02-2000		B/D-UPPER REAR, COVERED BY LIGHTS IN ZONE C-UPPER	1	KMEM
BM-02-3000		B/D-UPPER FRONT, COVERED BY LIGHTS IN ZONE A-UPPER	1	KMEM
BM-07-0204		CODE 3 LOWER PACKAGE - CUSTOM MID MOUNT AERIAL	1	KMEM
BM-09-0018	>	A-LOWER FRONT, CODE 3 65 SERIES LED	1	KMEM
BM-09-0098		A-LOWER FRONT MOUNTING, CUSTOM CHASSIS	1	KMEM
BM-09-1014	>	C-LOWER REAR, CODE 3 65 SERIES LED	1	KMEM
BM-09-2006	>	B/D-LOWER FRONT, CODE 3 65 SERIES LED	1	KMEM
BM-09-2098		B/D-LOWER FRONT MOUNTING, CUSTOM CHASSIS	1	KMEM
BM-09-3006	>	B/D-LOWER MID, CODE 3 65 SERIES LED	1	KMEM
BM-09-3506	>	B/D-LOWER SECONDARY MID, CODE 3 65 SERIES LED	1	KMEM
BM-09-4006	>	B/D-LOWER REAR, CODE 3 65 SERIES LED	1	KMEM
BM-15-0000		LIGHT PACKAGE NFPA CERTIFICATION - ALL UNITS	1	KMEM
		****** HEADER, OPTIONAL WARNING LIGHTS**	**1**	**KMEM**
		****** HEADER, AUDIBLE WARNING & COMMUNICATION EQUIPMENT**	**1**	**KMEM**
BW-00-0510		CHASSIS SINGLE ELECTRIC (DOT) HORN	1	KMEM
BW-00-0560		CODE 3, #CA278, BACK-UP ALARM - 87DBA	1	KMEM
BW-00-5000	>	DUAL CHROME AIR HORNS	1	KMEM
BW-00-5100		DUAL AIR HORNS RECESSED IN FRONT BUMPER, STD	1	KMEM
BW-00-5200		AIR HORN CTRL - FOOT FOR OFFICER & STEERING WHEEL FOR DRIVER	1	KMEM
BW-01-0120		SIREN, WHELEN # 295HFS2, 100W - FLUSH MOUNT	1	KMEM
BW-01-1000		ONE (1) WHELEN SP123BMC SPEAKER	1	KMEM
		****** HEADER, PUMP, TANK & ACC, 100' PLAT 5-SECT, MM**	**1**	**KMEM**
DC-00-2365		WATEROUS S100, 1750 GPM SINGLE STAGE PUMP - MID MOUNT	1	KMEM

PART NO	S	DESCRIPTION	QTY	ID
DC-01-4630		WATEROUS S100 MECHANICAL PUMP SEAL	1	KMEM
DC-01-6211		WATEROUS "C20" DRIVE UNIT, WATEROUS MID-MOUNT (FRONT DRIVE)	1	KMEM
DC-01-6490		PUMP RATIO (HALE, WATEROUS OR DARLEY)	1	KMEM
DC-01-7140		WATEROUS AIR SHIFT	1	KMEM
DC-01-8590		PUMP SHIFT MANUAL OVERRIDE (HALE, WATEROUS OR DARLEY)	1	KMEM
DC-01-8615		WATEROUS PUMP SHIFT INDICATOR LIGHTS	1	KMEM
DC-01-9020		TRANSMISSION LOCK-UP (HALE, WATEROUS OR DARLEY)	1	KMEM
DC-02-1900		PUMP MOUNTS - MID-SHIP PUMPS	1	KMEM
DC-02-1990		PUMP INSTALLATION - CUSTOM	1	KMEM
DC-04-0120		MANIFOLD - DISCHARGE & SUCTION FOR 1250-2000 GPM INTERFACE PUMPING SYSTEM	1	KMEM
		****** HEADER, WATEROUS S100, PRESSURE CONTROL - MID MOUNT**	**1**	**KMEM**
DC-05-1225		FIRE RESEARCH "IN CONTROL" TGA-300 PRESSURE GOVERNOR	1	KMEM
DC-05-1295		TASK FORCE TIPS #A18 SERIES INTAKE RELIEF VALVE	1	KMEM
DC-05-2500		PUMP UL CERTIFICATION - 750 GPM & UP	1	KMEM
		WATEROUS, PUMP PRIMING PUMP AND CONTROLS	**1**	**KMEM**
DC-05-3680	>	TRIDENT "MANUAL" AIR PRIMING SYSTEM	1	KMEM
		WATEROUS, DRAINS & ACCESSORES	**1**	**KMEM**
DC-05-5110		ROTARY MASTER DRAIN VALVE	1	KMEM
DC-05-5400		DRAINS/BLEEDER "INNOVATIVE CONTROLS" LIFT UP @ ALL 1-1/2" OR LARGER	1	KMEM
DC-05-5500		SYNFLEX SUCTION, DISCHARGE, PRESSURE AND CONTROL LINES	1	KMEM
DC-05-6220		WATEROUS ANODE BLOCKS - 2 TOTAL	1	KMEM
DC-10-2020		SIDE MOUNT PUMP MODULE, MM AERIAL	1	KMEM
DC-10-2500		PUMP MODULE - STEEL CONSTRUCTION	1	KMEM
		****** HEADER, SUCTIONS - MIDMOUNT, SIDE MOUNT**	**1**	**KMEM**
DC-14-3340		WATEROUS MAIN SUCTION INLETS 6" NST, 1750 GPM S100 PUMP	1	KMEM
DC-14-5560	>	6" NST MAIN PUMP SUCTION PRESSURE VENTED CAPS (2)	1	KMEM
		HEADER - AUXILIARY SUCTION/S - AERIALS	**1**	**KMEM**
DC-20-1000		2 1/2" AUX. SIDE SUCTION @ DS PANEL TO REAR OF MAIN INLET	1	KMEM
DC-20-1100		2 1/2" AKRON #8800 S.S. BALL VALVE, DS REAR AUX SUCTION	1	KMEM
DC-20-1200		SWING CONTROL @ VALVE, DS REAR AUX SUCTION	1	KMEM
DC-20-9500		BEHIND PANEL MOUNT	1	KMEM
		****** HEADER - TANK TO PUMP - MID-MOUNTS**	**1**	**KMEM**
DC-25-1200		TANK TO PUMP - 3" VALVE - LADDERS & PLATFORMS	1	KMEM
DC-25-3110		3" AKRON #8800 SERIES - S.S. BALL, VALVE , TANK TO PUMP	1	KMEM
DC-25-5110		3" PUSH/PULL CONTROL FOR TANK TO PUMP	1	KMEM
		****** HEADER - TANK FILL - MID-MOUNTS**	**1**	**KMEM**
DC-30-2100		TANK FILL LINE 2" FROM PUMP - SIDE MOUNT	1	KMEM
DC-30-2300		2" AKRON #8800 SERIES - S.S. BALL TANK FILL, SIDE MOUN	1	KMEM
DC-30-6500		PUSH/PULL CONTROL FOR TANK FILL	1	KMEM
		****** DISCHARGES & ACCESSORIES, MID MOUNT AERIAL - SIDE MOUNT**	**1**	**KMEM**
		DRIVER'S SIDE #1 MAIN DISCHARGE	**1**	**KMEM**
DC-35-0010		DS MAIN DISCHARGE #1 - SIDE MOUNT	1	KMEM
DC-35-0110		2 1/2" AKRON #8800 SERIES - S.S. BALL, DS #1, SIDE MOUNT	1	KMEM
DC-35-1815		DS #1 DISCH - 2 1/2" STRAIGHT NST & 30-DEGREE NST ELBOW	1	KMEM
DC-35-2010		2 1/2" NST PRESSURE VENTED CAP - DS DISCHARGE #1	1	KMEM
DC-35-2410		PUSH/PULL CONTROL FOR DS DISCHARGE #1 -SIDE MOUNT	1	KMEM
DC-35-3110		INNOVATIVE CONTROLS LIQUID FILLED 2 1/2" PRESS GAUGE SS- DS DISCHARGE #1	1	KMEM
		DRIVER'S SIDE #2 MAIN DISCHARGE	**1**	**KMEM**
DC-35-5010		DS MAIN DISCHARGE #2 - SIDE MOUNT	1	KMEM
DC-35-5110		2 1/2" AKRON #8800 SERIES - S.S. BALL, DS #2, SIDE MOUNT	1	KMEM
DC-35-6815		DS #2 DISCH - 2 1/2" STRAIGHT NST & 30-DEGREE NST ELBOW	1	KMEM
DC-35-7010		2 1/2" NST PRESSURE VENTED CAP - DS DISCHARGE #2	1	KMEM
DC-35-7410		PUSH/PULL CONTROL FOR DS DISCHARGE #2 -SIDE MOUNT	1	KMEM
DC-35-8110		INNOVATIVE CONTROLS LIQUID FILLED 2 1/2" PRESS GAUGE SS- DS DISCHARGE #2	1	KMEM
		OFFICER'S SIDE #1 MAIN DISCHARGE	**1**	**KMEM**
DC-39-0010	>	OS MAIN DISCHARGE #1 - SIDE MOUNT	1	KMEM

PART NO	S	DESCRIPTION	QTY	ID
DC-39-0110		2 1/2" AKRON #8800 SERIES - S.S. BALL, OS #1, SIDE MOUNT	1	KMEM
DC-39-1815		OS #1 DISCH - 2 1/2" STRAIGHT NST & 30-DEGREE NST ELBOW	1	KMEM
DC-39-2010		2 1/2" NST PRESSURE VENTED CAP - OS DISCHARGE #1	1	KMEM
DC-39-2410		PUSH/PULL CONTROL FOR OS DISCHARGE #1 -SIDE MOUNT	1	KMEM
DC-39-3110		INNOVATIVE CONTROLS LIQUID FILLED 2 1/2" PRESS GAUGE SS- OS DISCHARGE #1	1	KMEM
		OFFICER'S SIDE #2 MAIN DISCHARGE	**1**	**KMEM**
DC-39-5010	>	OS MAIN DISCHARGE #2 - SIDE MOUNT	1	KMEM
DC-39-5130	>	4" AKRON #8840 VALVE, OS #2, SIDE MOUNT	1	KMEM
DC-39-6865	>	OS #2 DISCH - 4" STRAIGHT NST	1	KMEM
DC-39-7045		DELETE 4" NST CAP - OS DISCHARGE #2	1	KMEM
DC-39-7315		4" NSTF X 4" STORZ KOCHEK SKE-R 30° ADAPTER WITH CAP OS	1	KMEM
DC-39-7810	>	AKRON HANDWHEEL GEAR VALVE CONTROL, OS DISCHARGE #2	1	KMEM
DC-39-8110		INNOVATIVE CONTROLS LIQUID FILLED 2 1/2" PRESS GAUGE SS- OS DISCHARGE #2	1	KMEM
		CROSSLAY #1 DISCHARGE	**1**	**KMEM**
DC-47-0400		CROSSLAY #1, 1 1/2" - AERIAL	1	KMEM
DC-47-1110		CROSSLAY #1 CAPACITY - 200' OF 1 3/4" HOSE	1	KMEM
DC-47-1410		CROSSLAY #1 - DOUBLE STACK HOSE DESIGN	1	KMEM
DC-47-1510		1 1/2" NST CHICKSAN SWIVEL - CROSSLAY #1	1	KMEM
DC-47-2110		CROSSLAY #1, PLUMBING, 2" STAINLESS STEEL PIPING	1	KMEM
DC-47-2210		2" AKRON #8800 SERIES - S.S. BALL, VALVE CROSSLAY #1, DISCH	1	KMEM
DC-47-2610		PUSH/PULL 1/4 TURN CONTROL CROSSLAY #1	1	KMEM
DC-47-3210		INNOVATIVE CONTROLS LIQUID FILLED 2 1/2" PRESS GAUGE SS - CROSSLAY #1	1	KMEM
		CROSSLAY #2 DISCHARGE	**1**	**KMEM**
DC-47-5400		CROSSLAY #2, 1 1/2" - AERIAL	1	KMEM
DC-47-6110		CROSSLAY #2 CAPACITY - 200' OF 1 3/4" HOSE	1	KMEM
DC-47-6410		CROSSLAY #2 - DOUBLE STACK HOSE DESIGN	1	KMEM
DC-47-6510		1 1/2" NST CHICKSAN SWIVEL - CROSSLAY #2	1	KMEM
DC-47-7110		CROSSLAY #2, PLUMBING, 2" STAINLESS STEEL PIPING	1	KMEM
DC-47-7210		2" AKRON #8800 SERIES - S.S. BALL, VALVE CROSSLAY #2,	1	KMEM
DC-47-7610		PUSH/PULL 1/4 TURN CONTROL CROSSLAY #2	1	KMEM
DC-47-8210		INNOVATIVE CONTROLS LIQUID FILLED 2 1/2" PRESS GAUGE SS - CROSSLAY #2	1	KMEM
		CROSSLAY OPTIONS - MM AERIAL	**1**	**KMEM**
DC-50-7015	>	VINYL CROSS LAY COVER	1	KMEM
DC-50-7030		CROSSLAY COVER RED IN COLOR	1	KMEM
	>	**WATERWAY DISCHARGE**	**1**	**KMEM**
DC-62-0225		AERIAL WATERWAY DISCHARGE - MM AERIAL	1	KMEM
DC-62-1150		WATERWAY DISCHARGE, PLUMBING, 5" STAINLESS STEEL - MM	1	KMEM
DC-62-1240		4" AKRON #8840 SERIES VALVE, WATERWAY	1	KMEM
DC-62-1950	>	AKRON HANDWHEEL GEAR VALVE CONTROL, WATERWAY	1	KMEM
DC-62-2210		INNOVATIVE CONTROLS LIQUID FILLED 2 1/2" PRESS GAUGE SS - WATERWAY	1	KMEM
		PUMP PANELS & ACCESSORIES	**1**	**KMEM**
DD-65-0510		SIDE MOUNT PUMP PANEL - MID-MOUNT	1	KMEM
DD-65-4115		SIDE MOUNT PANELS - 12 GAUGE BRUSHED STAINLESS STEEL	1	KMEM
DD-65-4715		HORIZONTALLY HINGED GAUGE PANEL - MID-MOUNT	1	KMEM
DD-65-4810		OFFICER SIDE VERTICALLY HINGED PUMP ACCESS DOOR - SIDE MOUNT	1	KMEM
DD-65-4820		PUMP ACCESS DOORS - MID-MOUNT	1	KMEM
DD-65-5150		PANEL FASTENERS	1	KMEM
DD-65-5510		CAPS AND ADAPTERS SAFETY TETHER - BALL CHAIN	1	KMEM
DD-65-8820		PUMP PANEL DISCH./SUCTION TRIM PLATES, HIGH POLISHED	1	KMEM
DD-65-9000		DISCHARGE GAUGE TRIM BEZELS	1	KMEM
DD-65-9110		IDENTIFICATION PLATES	1	KMEM
DD-66-0300		PUMP OPERATOR'S PANEL LIGHT SHIELD - MID-MOUNT	1	KMEM
DD-66-0340		TECNIQ E18 LED LIGHTS - MID-MOUNT	1	KMEM
DD-66-2100		OS PUMP PANEL LIGHTING	1	KMEM
DD-66-2130		TECNIQ EON 3 LED LIGHTS - OS PUMP PANEL	1	KMEM

PART NO	S	DESCRIPTION	QTY	ID
		PUMP OPERATOR'S PANEL - SIDE MOUNT, AERIAL - MID MOUNT	**1**	**KMEM**
DD-70-2334		FIRE RESEARCH "IN CONTROL" PRESSURE GOVERNOR CONTROL @ PANEL	1	KMEM
DD-70-2410		PUMP PRESSURE & VACUUM TEST PORTS @ PANEL	1	KMEM
DD-70-4125	>	DELETE - MASTER PRESSURE & COMPOUND GAUGES	1	KMEM
DD-70-4130		**** CONSIDER DELETING MASTER GAUGES - IN GOVERNOR DISPLAY ****	1	KMEM
DD-70-4680		PRESSURE & COMPOUND GAUGE RANGES - SINGLE STAGE	1	KMEM
DD-70-4900		AUXILIARY ENGINE COOLER	1	KMEM
		WATER TANK LEVEL GAUGE - AERIAL, MID-MOUNT	**1**	**KMEM**
DD-72-0410		FIRE RES - TANK VISION #WLA300-A00 LED WATER TANK GAUGE - PRIMARY	1	KMEM
DD-72-1300	>	FIRE RES WATER LEVEL - 1/4" NPT PRESS TRANS @ BOTTOM TANK	1	KMEM
DD-80-0110		SLIDE-OUT STEP @ DRIVER'S PUMP OPERATOR'S PANEL	1	KMEM
DE-00-1070	>	**** HEADER, MM PLATFORMS, WATER TANK	1	KMEM
		WATER TANKS/OPTIONS AERIALS	**1**	**KMEM**
DE-05-1700	>	UPF POLYIIE TANK, 300 GAL. - AERIAL	1	KMEM
DE-05-6000		TANK DESCRIPT, CONSTR AND MOUNT, UPF POLY IIE TANK	1	KMEM
JA-00-0100		BODY AND COMPARTMENT HEADER (ALL AERIAL DEVICES)	1	KMEM
JA-00-5070		GENERAL BODY DESCRIPT, MID-MOUNT, 100' PLATFORMS	1	KMEM
TF-08-0800	>	ANY MID-MOUNT, TURNTABLE COMPTS, LH & RH SIDE, LOW BODY	1	KMEM
TF-08-6000	>	COMPARTMENTATION, 100-5-MM STYLE #1H-LO	1	KMEM
		**** HEADER, MM BODY OPTIONS (WITH PUMP)**	**1**	**KMEM**
TF-10-0100		BEVELED OVERLAPPING DOORS, ALL COMPARTMENTS, ALL DEVICES	1	KMEM
TF-10-1900		BRUSHED FINISHED DOOR PANS - 2" THICK DOORS	1	KMEM
TF-10-2700		DOOR HINGE FOR BEVELED OVERLAPPING HINGED DOORS	1	KMEM
TF-10-2800		DOOR SEAL FOR BEVELED OVERLAPPING HINGED DOORS	1	KMEM
TF-10-2940		ROTARY LATCHES WITH D-RING HANDLES	1	KMEM
TF-10-3150		GAS SHOCK ON HORIZONTALLY & VERTICALLY HINGED DOORS	1	KMEM
TF-10-6000		COMPARTMENT FLOORS (AERIALS ONLY)	1	KMEM
TF-11-0500		COMPARTMENT GENERAL DESCRIPTION, ALL LADDERS & PLATFORMS	1	KMEM
TF-11-1460		PAINTED REAR BODY PANEL, MID-MOUNTS	1	KMEM
TF-11-2275		STAINLESS STEEL OUTRIGGER COVER PANEL, FOUR RIGGER DEVICES	1	KMEM
TF-11-3000		BODY RUB RAILS, 1" X 1" EXTRUSION	1	KMEM
TF-12-1000		RUNNING BOARD STEPS (AERIALS ONLY)	1	KMEM
TF-13-3085		TURNTABLE BODY MODULE, MID MOUNT PLATFORM	1	KMEM
TF-13-3200		MID-MOUNT, TURNTABLE LADDERS	1	KMEM
TF-13-3250		MID-MOUNT, PLATFORM ACCESS LADDER, DRIVER SIDE OF APPARATUS	1	KMEM
TF-13-5040		MID-MOUNT PLATFORM, BODY HANDRAILS, EXTRUDED ALUMINUM	1	KMEM
TF-14-1000		ALUMINUM WHEEL WELL LINERS	1	KMEM
TF-14-1710		POLISHED ALUMINUM FENDERETTES, TANDEM AXLE BODIES	1	KMEM
TF-14-5000		REAR MUD FLAPS	1	KMEM
TF-14-6500		PAINTED REAR TOW EYES, THROUGH REAR SHEET	1	KMEM
TF-15-1150		HOSE BED, MID-MOUNT AERIALS	1	KMEM
TF-15-1900		ALUMINUM HOSE BED FLOORING - AERIAL	1	KMEM
TF-15-3115		HOSE BED COVER, VINYL WITH VELCRO	1	KMEM
TF-15-3190		HYPALON MATERIAL RED IN COLOR	1	KMEM
		**** HEADER, COMPARTMENT ACCESSORIES - MIDMOUNTS**	**1**	**KMEM**
TJ-05-1005		ADJUSTABLE SHELF DESCRIPTION - MIDMOUNT	1	KMEM
TJ-05-2000	>	(AUTO QTY) ADJUSTABLE SHELF(S), MOUNTED AS DIRECTED	8	KMEM
TJ-10-1005		250#, FLOOR MOUNTED, ROLLOUT TRAY DESCRIPTION - MIDMOUNT	1	KMEM
TJ-10-1105	>	(AUTO QTY) ROLLOUT TRAY(S), MOUNTED AS DIRECTED	4	KMEM
TJ-55-1010		SWING OUT TOOL BOARD, PAC TRAC DOUBLE FACED EXTRUSION - MIDMOUNT	1	KMEM
TJ-55-1200	>	(AUTO QTY) SWING OUT TOOL BOARD(S), MOUNTED AS DIRECTED	1	KMEM
	>	**"NOTE" READ THIS BEFORE ADDING ANY ADDITIONAL GROUND LADDERS**	**1**	**KMEM**
		**** HEADER, 100-5-MM-PL GROUND LADDERS**	**1**	**KMEM**
TN-00-5090	>	CENTER LADDER STORAGE, 100-5-MM-PL	1	KMEM
TN-00-7030		HINGED PAINTED DOORS, LADDER STORAGE, MID-MOUNTS ONLY	1	KMEM
TN-01-0870		ALCO-LITE LADDER COMP, 100-5-MM-PL	1	KMEM
TN-02-1150		ALCO-LITE PEL-35 35' 2-SECTION EXTENSION LADDER (ALUM)	1	KMEM

PART NO	S	DESCRIPTION	QTY	ID
TN-02-1170		ALCO-LITE PEL-24 24' 2-SECTION EXTENSION LADDER (ALUM)	1	KMEM
TN-02-2510		ALCO-LITE PRL-16 16' ROOF LADDER W/FOLDING HOOKS (ALUM)	2	KMEM
TN-02-7000		ALCO-LITE AEL-14 14' ATTIC EXTENSION LADDER (ALUM)	1	KMEM
TN-02-8010		ALCO-LITE FL-10 10' FOLDING ATTIC LADDER (ALUM)	1	KMEM
		****** HEADER, PIKE POLES & HOLDERS - AERIALS**	**1**	**KMEM**
TN-10-0500	>	PIKE POLE TUBE(S) - AERIALS	6	KMEM
TN-10-2030		FIRE HOOKS UNLIMITED PIKE POLES 2-6', 2-8', & 2-12' WITH FIB	1	KMEM
TN-20-0000		ADDITIONAL ITEMS SHIPPED WITH VEHICLE, ALL AERIAL DEVICES	1	KMEM
		****** HEADER, LOOSE EQUIPMENT - AERIAL**	**1**	**KMEM**
TN-35-1015		TWO (2) ZICO #SAC-44 FOLDING WHEEL CHOCKS, (2) MTD DRIVER SIDE	1	KMEM
		****** HEADER, 100' PLATFORM, MID-MOUNT 5-SECTION**	**1**	**KMEM**
TQ-00-1500		100' PLATFORM, MID-MOUNT 5-SECT GEN, INTENT & DESIGN STANDAR	1	KMEM
TQ-00-3005		MOUNTING OF AERIAL, MID-MOUNTS	1	KMEM
TQ-00-3420		HEIGHT AND REACH, 100' 5-SECT. MM PLATFORM	1	KMEM
TQ-00-4000		MATERIAL STANDARDS, ALL DEVICES	1	KMEM
TQ-00-5055		100' PLATFORM, MID-MOUNT 5-SECT. HYDRAULIC SYSTEM	1	KMEM
TQ-00-5130		PARKER HOSE KIT - 4 JACK UNIT MID MOUNT	1	KMEM
TQ-00-6120		HYDRAULIC PUMP - PRESSURE COMPENSATED	1	KMEM
TQ-00-7030		HYDRAULIC RESERVOIR - MID MOUNT	1	KMEM
TQ-00-7070		HYDRAULIC OIL - REGULAR - A/W 46 - 120 GAL	1	KMEM
TQ-00-7115		DIVERTER VALVE, MID-MOUNT DEVICES	1	KMEM
TQ-00-7230		OUTRIGGER HYDRAULIC CONTROL VALVE - MM, PROPORTIONAL	1	KMEM
TQ-00-7460		ELECTRIC TURNTABLE HYDRAULIC CONTROL VALVE, MM PLATFORM	1	KMEM
TQ-00-7505		HYDRAULIC SYSTEM FILTRATION	1	KMEM
TQ-00-8550		MID-MOUNT PLATFORM, "IQAN" MOTION CONTROL SYSTEM - ELECTRIC CONTROLS @ TT	1	KMEM
TQ-00-8700		HYDRAULIC PUMP PRESSURE - DISPLAY	1	KMEM
TQ-00-8710		ELEVATION ANGLE OF LADDER - DISPLAY	1	KMEM
TQ-00-8715		VERTICAL HEIGHT OF LADDER - DISPLAY	1	KMEM
TQ-00-8725		DEGREE OF ROTATION FROM VEHICLE CENTERLINE - DISPLAY	1	KMEM
TQ-00-8730		E-ZONE CAB & BODY AVOIDANCE WARNING - DISPLAY	1	KMEM
TQ-00-8735		E-ZONE SHORT JACK WARNING - DISPLAY	1	KMEM
TQ-00-8740		CRADLE ALIGNMENT MESSAGE - DISPLAY	1	KMEM
TQ-00-8750		DEVICE LOAD MONITORING - DISPLAY	1	KMEM
TQ-00-8760		E-SPEED LADDER TIP SPEED CONTROL - DISPLAY	1	KMEM
TQ-00-8765		E-CUSH RAMP CONTROL FOR ELEVATION - DISPLAY	1	KMEM
TQ-00-8770		E-CUSH RAMP CONTROL FOR EXTENSION & RETRACTION - DISPLAY	1	KMEM
TQ-00-8895		WARNING MESSAGES - TURNTABLE & PLATFORM	1	KMEM
TQ-00-9555		100' PLATFORM, MID-MOUNT 5-SECT. EMERG HYD. PUMP, EPU	1	KMEM
TQ-01-1000		HOT SHIFT PTO W/CONTROLS IN CAB	1	KMEM
TQ-01-1100		FAST IDLE CONTROL FOR ALL AERIAL DEVICES	1	KMEM
TQ-02-0225		100' PLATFORM, MID-MOUNT 5-SECTION TORQUE BOX	1	KMEM
TQ-02-1225		100' PLATFORM, MID-MOUNT 5-SECTION OUTRIGGERS	1	KMEM
TQ-02-1725		100' PLAT, MID-MOUNT 5-SECT OUTRIGGERS - HORIZONTAL CYLINDER	1	KMEM
TQ-02-1925		100' PLAT, MID-MOUNT 5-SECT OUTRIGGERS - VERTICAL CYLINDERS	1	KMEM
TQ-02-2110		IQAN - OUTRIGGER STRING POTENTIOMETER - FOUR (4) OUTRIGGERS	1	KMEM
TQ-02-2200		OUTRIGGER/JACK FOOT PADS, FOUR (4) JACK DEVICES	1	KMEM
TQ-02-2350		AUXILARY JACK PADS, FOUR (4) 24" X 24" x 1" POLY	1	KMEM
TQ-02-2500		OUTRIGGER INTERLOCK SYSTEM & ALARM, ALL DEVICES	1	KMEM
		****** HEADER - OUTRIGGER LIGHTING, FOUR (4) OUTRIGGERS**	**1**	**KMEM**
TQ-02-5145		AKRON LED OUTRIGGER LAMPS, 4-OUTRIGGERS	1	KMEM
TQ-02-5225		LED OUTRIGGER GROUND LIGHTS - GROTE WHITELIGHT, 4-OUTRIGGERS	1	KMEM
TQ-02-5360		CODE 3 45 SERIES, LED LIGHTS ON (4) OUTRIGGER PANELS	1	KMEM
TQ-02-6005		OUTRIGGER WARNING LIGHT ACTIVATION, PRIMARY WARNING	1	KMEM
TQ-02-6800		OUTRIGGER SCOTCHLITE, WHITE	1	KMEM
TQ-02-7300		PLATFORM, MID-MOUNT TETHER OUTRIGGER CONTROLS	1	KMEM
TQ-02-9220		OUTRIGGER LEVELS MID-MOUNT DEVICES; TWO (2)	1	KMEM
TQ-03-1400		100' PLATFORM, MID-MOUNT 5-SECTION TURNTABLE	1	KMEM
TQ-03-3010		TURNTABLE DECK - ALUMINUM TREADPLATE	1	KMEM
TQ-04-1850		HEEL PIN STEP ON TURNTABLE, APPLICABLE DEVICES	1	KMEM

PART NO	S	DESCRIPTION	QTY	ID
TQ-04-1860		TURNTABLE HANDRAILS, KNURLED ALUMINUM, MID-MOUNTS	1	KMEM
TQ-04-2130		HEEL PIN - 100' HD MM LADDER & 81', 95', 100' MM PLAT	1	KMEM
TQ-04-2250		TURNTABLE RETENTION BOLTS, APPLICABLE DEVICES	1	KMEM
TQ-04-2300		STAINLESS STEEL CRADLE ALIGNMENT ARROWS ON TURNTABLE	1	KMEM
TQ-04-2810		SAFETY CHAINS BETWEEN TURNTABLE HANDRAIL, MID-MOUNTS	1	KMEM
TQ-04-7300		100' PLATFORM, MID-MOUNT 5-SECTION 5" TURNTABLE SWIVEL	1	KMEM
TQ-04-9000		IQAN - SWIVEL ROTATION ENCODER	1	KMEM
TQ-06-0460		100' PLATFORM, MID-MOUNT 5-SECT, LADDER CONSTRUCTION	1	KMEM
TQ-06-1850		100' PLATFORM 5-SECT MM, LADDER DIMENSIONS	1	KMEM
TQ-06-3000		RUNG COVERS - PHOTOLUMINESCENT, ALL DEVICES	1	KMEM
TQ-06-9000		AERIAL TRAVEL SUPPORT, ALL DEVICES	1	KMEM
TQ-06-9020		CRADLE ILLUMINATION LIGHTS - HALOGEN LIGHTS	1	KMEM
TQ-07-1500		100' PLATFORM, MID-MOUNT 5-SECT, ELEVATION SYSTEM	1	KMEM
TQ-07-2800		IQAN - INCLINOMETER	1	KMEM
TQ-07-2801		IQAN - MOMENT LOAD INDICATOR	1	KMEM
TQ-07-2815		IQAN - E-CUSH CONTROL, ELEVATION SYSTEM - PLATFORM & TURNTABLE	1	KMEM
TQ-07-3020		IQAN LOAD METER TURNTABLE & PLATFORM	1	KMEM
TQ-08-1500		100' PLATFORM, MID-MOUNT 5-SECT, ROTATION SYSTEM	1	KMEM
TQ-08-2820		ROTATION MOTOR AND BRAKE - 48" INTERNAL BEARINGS	1	KMEM
TQ-08-3050		IQAN - "E-SPEED" SAFETY SYSTEM, PLATFORM & TURNTABLE	1	KMEM
TQ-08-3110		IQAN - "E-ZONE" ROTATION SAFETY SYSTEM, 4-OUTRIGGERS	1	KMEM
TQ-08-3680		IQAN - "E-ZONE" CAB & BODY PROXIMITY SYSTEM - PLATFORM & TURNTABLE	1	KMEM
TQ-09-1500		100' PLATFORM, MID-MOUNT 5-SECT, EXTENSION/RETRACTION SYSTEM	1	KMEM
TQ-09-2350		EXTENSION CYLINDERS PAINTED LADDER PAINT COLOR	1	KMEM
TQ-09-2800		IQAN - EXTENSION SYSTEM STRING POTENTIOMETER	1	KMEM
TQ-09-2815		IQAN - "E-CUSH" EXTENSION/RETRACTION SYSTEM - PLATFORM & TURNTABLE	1	KMEM
TQ-09-3000		LADDER SLIDE PADS, ALL DEVICES	1	KMEM
		LADDER EXTENSION NUMBERS, ALL DEVICES	**1**	**KMEM**
TQ-09-3150		LADDER LEVEL INDICATOR (BASE SECTION) - LIGHTED	1	KMEM
TQ-09-3340		PLATFORM, CABLE/HOSE/WIRE ROUTING, 5-SECTIONS	1	KMEM
		****** 2010 - MID MOUNT PLATFORM CONSTRUCTION - OPTIONS ******	**1**	**KMEM**
TQ-09-6060		PLATFORM STRUCTURE FINISH - PAINTED TO MATCH LADDER COLOR	1	KMEM
TQ-09-6100		PLATFORM DOORS, HINGED @ REAR, LATCHED @ FRONT SELF CLOSE	1	KMEM
TQ-09-6200		PLATFORM, REAR ACCESS LADDER AND REAR GATE	1	KMEM
TQ-09-6210		MID MOUNT PLATFORM, REAR REAR ENTRY GATE	1	KMEM
TQ-09-7100		PLATFORM FLOOR	1	KMEM
TQ-09-7200		PLATFORM MOUNT	1	KMEM
TQ-09-7300		PLATFORM LEVELING SYSTEM	1	KMEM
TQ-09-8000		PLATFORM BOTTOM HEAT SHIELDS, .09" TREAD PLATE	1	KMEM
TQ-09-8100		PLATFORM EXT. HEAT SHIELDS, .09" PAINTED ALUMINUM	1	KMEM
TQ-09-8200		PLATFORM SAFETY BELT LOOPS AND EXTERIOR LIFTING POINTS	1	KMEM
		****** HEADER - PLATFORM 120 VOLT ELECTRICAL SYSTEM & ACCESSORIES**	**1**	**KMEM**
TQ-11-3001		PLAT, 120 VOLT ELECTRICAL SYSTEM	1	KMEM
TQ-11-3050		DELETE TWO (2) RECEPTACLES FROM PLATFORM	1	KMEM
TQ-11-3490		NO 120V LIGHTS REQUIRED ON REAR OF PLATFORM	1	KMEM
TQ-11-5045		NO 120V LIGHTS REQUIRED ON FRONT OF PLATFORM	1	KMEM
TQ-11-5170		NO 120V LIGHTS REQUIRED ON BOTTOM OF PLATFORM	1	KMEM
TQ-11-5650		NO 120V LIGHTS REQUIRED ON SIDES OF PLATFORM	1	KMEM
		****** HEADER - PLATFORM, 12 VOLT ELECTRICAL SYSTEM & ACCESSORIES**	**1**	**KMEM**
TQ-11-6020		HEEL PIN STEP LIGHTS - TECNIQ EON 3 LED LIGHTS	1	KMEM
TQ-11-6059		TURNTABLE CONSOLE STEP LIGHT - TECNIQ EON 3 LED	1	KMEM
TQ-11-6075		PLATFORM CONSOLE STEP LIGHT - TECNIQ EON 3 LED LIGHT	1	KMEM
TQ-11-6080		TURNTABLE & PLATFORM CONTROL CONSOLE LIGHTING - LUMA BAR LED H2O	1	KMEM
TQ-11-6120		RED LED MARKER LIGHTS - PLATFORM	1	KMEM
TQ-11-6210		TWO (2) UNITY SPOTS @ LADDER BASE SECTION	1	KMEM
TQ-11-6310		ONE (1) UNITY SPOT & ONE (1) FLOOD @ PLATFORM	1	KMEM
TQ-11-8100	>	NO PLATFORM WARNING LIGHTS REQUIRED	1	KMEM

PART NO	S	DESCRIPTION	QTY	ID
TQ-12-1000		PLATFORM, CONTROL STATIONS	1	KMEM
TQ-12-1080		MM PLATFORM, CONSOLE LOCATED @ LH SIDE OF TURNTABLE, STD	1	KMEM
TQ-12-1095		PAINTED ALUMINUM TURNTABLE CONSOLE - MATCH LADDER COLOR	1	KMEM
TQ-12-1550		100' PLATFORM, MID-MOUNT 5-SECT. TURNTABLE CONTROL STATION	1	KMEM
TQ-12-2520		FIRE RESEARCH INSIGHT FLOWMETER @ TURNTABLE CONSOLE	1	KMEM
TQ-12-2595		TURNTABLE CONSOLE COVER - PAINTED RADIUS	1	KMEM
TQ-12-6000		IQAN - MULIT-PLEX CONTROLLERS FOR PLATFORM	1	KMEM
TQ-12-6610		PLATFORM CONTROL STATION, RIGHT REAR OF PLATFORM	1	KMEM
TQ-12-6635		IQAN - MDM III DISPLAY @ PLATFORM CONTROL STATION	1	KMEM
TQ-12-6850		100' PLATFORM, MID-MOUNT 5-SECTION PLATFORM CONTROL STATION	1	KMEM
TQ-12-7100		PAINTED COVER FOR PLATFORM CONTROLLERS	1	KMEM
TQ-14-2200		PLATFORM, FIRE RESEARCH 2-WAY COMMUNICATION SYSTEM - LOWER CONTROL	1	KMEM
TQ-14-2205		PLATFORM, FIRE RESEARCH 2-WAY COMMUNICATION SYSTEM - UPPER SPEAKER/MIC	1	KMEM
TQ-15-0010		LADDER ANGLE INDICATOR (FLY SECTION) - LIGHTED	1	KMEM
TQ-16-1550	>	DELETE BREATHING AIR SYSTEM, ALL PLATFORM DEVICES	1	KMEM
TQ-18-0550		100' PLATFORM, M-M, 5-SECTION WATERWAY SYSTEM	1	KMEM
TQ-18-1240		100' PLATFORM, M-M, 5-SECTION WATERWAY	1	KMEM
TQ-18-2560		5" HEEL PIN SWIVEL - S-PIPES, -12 TO 80 DEGREES	1	KMEM
TQ-18-2600		AUTOMATIC WATER DRAIN/VENT	1	KMEM
TQ-18-3000		ALL DEVICES, WATERWAY RELIEF VALVE	1	KMEM
TQ-18-3020		MID-MOUNT AERIAL WATERWAY DRAIN, 1 1/2" VALVE	1	KMEM
TQ-18-5050		5-SECTION PLATFORM, PLATFORM WATERWAY SYSTEM, SINGLE GUN	1	KMEM
TQ-18-5100		SHOWER NOZZLE UNDER PLATFORM (MANUAL)	1	KMEM
		PLATFORM MANUAL TFT VALVE UNDER MONITOR - SINGLE	**1**	**KMEM**
TQ-18-5215		2.5" NH GATED ELBOW LEFT HAND - C1 - VALVE UNDER MONITOR	1	KMEM
TQ-18-5255		BLIND PLUG - C2 - VALVE UNDER MONITOR	1	KMEM
TQ-18-5265		BLIND PLUG - C3 - VALVE UNDER MONITOR	1	KMEM
TQ-18-5275		2.5" NH GATED ELBOW RIGHT HAND - C4 - VALVE UNDER MONITOR	1	KMEM
TQ-18-6105	>	PLATFORM, SINGLE AKRON #3578 MONITOR	1	KMEM
TQ-18-6210	>	PLATFORM, AKRON #5177 NOZZLE	1	KMEM
TQ-18-6300		PLATFORM, AKRON MONITOR CONTROLS W/ AUTO STOW	1	KMEM
TQ-20-1500		100' PLATFORM, MID-MOUNT 5-SECTION LADDER CAPACITIES	1	KMEM
TQ-20-3500		5-SECTION PLATFORM, WATERWAY CAPACITIES - SINGLE GUN	1	KMEM
TQ-50-0100		FIRE DEPT AERIAL FAMILIARIZATION - PROVIDED BY FACTORY	1	KMEM
TQ-50-0140		FACTORY FAMILIARIZATION - FOUR (4) DAYS	1	KMEM
TQ-50-0600		AERIAL SERVICE, ALL DEVICES	1	KMEM
TQ-50-0700		WARNING DECALS, ALL DEVICES	1	KMEM
TQ-52-0100		AERIAL LADDER, MANUALS, TWO (2) SETS	1	KMEM
TQ-70-1500		100' PLATFORM MID-MOUNT 5-SECTION CERT. & TESTING	1	KMEM
		****** HEADER - PAINT SECTION - ALL UNITS ******	**1**	**KMEM**
UA-00-1100		GENERAL PAINT DESCRIPTION - ALL	1	KMEM
UA-00-1200		GENERAL PRIMER & PREP DESCRIPTION - LADDER/PLATFORM	1	KMEM
UA-00-1400		GENERAL FINISH PAINT DESCRIPTION - LADDER/PLATFORM	1	KMEM
UA-00-2700		BODY BUFFING & FINISH - LADDER/PLATFORM	1	KMEM
		****** HEADER - LADDER/PLATFORM BODY PAINT ******	**1**	**KMEM**
UA-03-0200		INSIDE/UNDERSIDE BODY PAINTED JOB COLOR - LADDER/PLATFORM	1	KMEM
UA-03-0400		CMPT INT W/ MULTISPEC, WHITE MARBLE STONE - LADDER/PLATFORM	1	KMEM
UA-03-0900		SINGLE COLOR BODY PAINT SCHEME - LADDER/PLATFORM	1	KMEM
UA-03-2200		PUMPHOUSE & PLUMBING PAINTED JOB COLOR - LADDER/PLATFORM	1	KMEM
		****** HEADER - TANDEM AXLE CUSTOM CHASSIS PAINT (AERIAL)**	**1**	**KMEM**
UA-05-0050		CUSTOM CAB PRIMER & PREP	1	KMEM
UA-05-0070		CUSTOM FINISH PAINT & PREP	1	KMEM
UA-05-0200		TWO TONE CUSTOM CAB PAINT SCHEME	1	KMEM
UA-05-0350		CUSTOM CAB BUFFING & FINISH	1	KMEM
UA-05-0360		CUSTOM CAB INTERIOR PAINT - TEXTURED GRAY	1	KMEM
UA-05-0405		CUSTOM CHASSIS JOB COLOR FRAME RAILS	1	KMEM
UA-05-0505		CUSTOM CHASSIS WHEEL AND HUB PAINT - TANDEM AXLE	1	KMEM
UA-06-0200		LADDER, PAINTING, ALL DEVICES, WHITE #91528	1	KMEM

PART NO	S	DESCRIPTION	QTY	ID
UA-06-0450		EXTENSION CYLINDERS PAINTED TO MATCH LADDER COLOR	1	KMEM
UA-06-0900		TORQUEBOX PAINT - JOB COLOR	1	KMEM
UA-06-1100		OUTRIGER PAINT - SILVER URETHABOND 104	1	KMEM
UA-06-1205		TURNTABLE PAINT - LADDER COLOR	1	KMEM
UA-06-1215		TURNTABLE CONSOLE PAINT - LADDER COLOR	1	KMEM
UA-06-1225		LIFT CYLINDERS CONSOLE PAINT - LADDER COLOR	1	KMEM
UA-06-1500		LADDER RUST INHIBITOR - ALL DEVICES	1	KMEM
UA-06-2120	>	PAINT CODES, TWO-TONE COLORS, FILL IN BLANKS	1	KMEM
UA-06-2130		PAINT CODES, AERIAL DEVICE - WHITE #91528	1	KMEM
UA-06-2200		PINT OF TOUCH-UP PAINT	1	KMEM
UA-06-2510		FINALIZATION & DETAILING - LADDER/PLATFORM	1	KMEM
UA-06-2850		RUSTPROOFING WARRANTY, TEN (10) YEAR	1	KMEM
		****** HEADER, LETTERING & STRIPING - 100-5-MM-PL**	**1**	**KMEM**
UA-12-0100		COMPUTER GENERATED LETTERING	1	KMEM
UA-12-1220		GOLDLEAF W/ DUAL DROP SHADOW LETTERING ON FRONT CAB DOORS	1	KMEM
UA-12-1245		3" LETTERING ON FRONT CAB DOORS	1	KMEM
UA-12-1760		GOLDLEAF W/ DUAL DROP SHADOW LETTERING ON CREW CAB DOORS	1	KMEM
UA-12-1785		3" LETTERING ON CREW CAB DOORS	1	KMEM
UA-12-2720		GOLDLEAF W/ DUAL DROP SHADOW LETTERING ON FRONT OF CAB	1	KMEM
UA-12-2745		3" LETTERING ON FRONT OF CAB	1	KMEM
UA-12-3120		GOLDLEAF W/ DUAL DROP SHADOW LETTERING ON CAB SIDE PANEL	1	KMEM
UA-12-3145		3" LETTERING ON CAB SIDE PANEL	1	KMEM
UA-12-3720		GOLDLEAF W/ DUAL DROP SHADOW LETTERING ON REAR BODY PANEL	1	KMEM
UA-12-3745		3" LETTERING ON REAR BODY	1	KMEM
UA-13-0100		LETTERING FONT - BASIC BLOCK TYPE FONT	1	KMEM
UA-14-1310		LARGE CUSTOM FIRE DEPARTMENT LOGO	1	KMEM
UA-14-1325		GOLDLEAF W/ TWO COLORS - LARGE LOGO	1	KMEM
UA-14-1335	>	LOCATION - LARGE CUSTOM LOGO	1	KMEM
UA-16-1000		ACCENT STRIPING & SCROLL OPTIONS	1	KMEM
UA-16-1200		1/2" ACCENT STRIPE ON BODY UPPER & LOWER AREAS OF BODY	1	KMEM
UA-16-1210		GOLD LEAF ACCENT MATERIAL - UPPER & LOWER AREAS OF BODY	1	KMEM
UA-16-1500		1/2" ACCENT STRIPE ON CAB PAINT BREAK LINE	1	KMEM
UA-16-1510		GOLD LEAF ACCENT MATERIAL - CAB PAINT BREAK LINE	1	KMEM
UA-20-0110		14" X 108" LETTERING PANELS ON BASE SECTION	1	KMEM
UA-20-0200		SIGN PANELS TO PAINTED TO MATCH AERIAL DEVICE COLOR	1	KMEM
UA-20-0500		SCOTCH-CAL W/O DROP SHADOW LETTERING FOR AERIAL	1	KMEM
UA-50-0200		NFPA REQUIRED SCOTCH-LITE STRIPINGSTRIPING - TA AERIAL	1	KMEM
UA-50-0220		8" SCOTCH-LITE STRIPE ON CAB AND BODY - TA AERIAL	1	KMEM
UA-58-5100		WHITE SCOTCH-LITE	1	KMEM
UA-80-6000		REAR CHEVRON STRIPING	1	KMEM
UA-80-6002		50% VERTICAL SURFACE	1	KMEM
UA-80-6030		6" REAR SCOTCH-LITE CHEVRON STRIPING	1	KMEM
UA-80-6070		RUBY RED & LEMON YELLOW SCOTCH-LITE	1	KMEM
		****** PROPOSED - AERIAL WARRANTY PKG, W/PUMP @ REAR OF SPEC**	**1**	**KMEM**
W6-00-000J		PROPOSED - KME WARRANTY, STARTING ON DELIVERY DATE	1	KMEM
W6-00-0010	**X** <	PROPOSED - 5 YEAR FCAM WARRANTY - CUSTOM CHASSIS	1	
		$19,500 per email Phil to Byron 9-27-16		
W6-00-003M	>	PROPOSED - 5 YEAR WARRANTY - BASE WITH CUSTOM CHASSIS	1	KMEM
W6-00-0163		PROPOSED - 10 YEAR CUMMINS ISX - EXTENDED WARRANTY	1	KMEM
W6-00-0210		PROPOSED - 5 YEAR ALLISON EVS TRANSMISSION WARRANTY	1	KMEM
W6-00-0220		PROPOSED - 3 YEAR COOLING SYSTEM WARRANTY - CUSTOM	1	KMEM
W6-00-0230		PROPOSED - LIFETIME FRAMERAIL WARRANTY	1	KMEM
W6-00-0242		PROPOSED - SHEPPARD STEERING GEAR STANDARD - THREE YEAR WARRANTY	1	KMEM
W6-00-0254		PROPOSED - 5 YEAR MERITOR FRONT AXLE - WARRANTY	1	KMEM
W6-00-0266		PROPOSED - 5 YEAR MERITOR 180 SERIES TANDEM AXLE REAR - WARRANTY	1	KMEM
W6-00-0270		PROPOSED - 3 YEAR MERITOR ABS - WARRANTY	1	KMEM
W6-00-0320	>	PROPOSED - 10 YEAR CAB STRUCTURAL WARRANTY	1	KMEM

PART NO	S	DESCRIPTION	QTY	ID
W6-00-0330		PROPOSED - 10 YEAR BODY STRUCTURAL WARRANTY	1	KMEM
W6-00-0390		PROPOSED - 10 YEAR CAB & BODY CORROSION WARRANTY	1	KMEM
W6-00-0450		PROPOSED - PAINT FINISH WARRANTY, TEN (10) YEAR	1	KMEM
W6-00-0483		PROPOSED - 1 YEAR BRIGHTWORK WARRANTY	1	KMEM
W6-00-0490		PROPOSED - 10 YEAR STAINLESS STEEL PIPING WARRANTY	1	KMEM
W6-00-0550		PROPOSED - REAR SUSPENSION - RIDEWELL - AIR RIDE - 3 YEAR WARRANTY	1	KMEM
W6-00-0570		PROPOSED - SAFEGUARD TECHNOLOGY - 10 YEAR - RUNG COVERS	1	KMEM
W6-00-0610		PROPOSED - 20 YEAR AERIAL PLATFORM WARRANTY	1	KMEM
W6-00-0640	>	PROPOSED - FIVE (5) YEAR AERIAL WATERWAY SWIVEL WARRANTY	1	KMEM
W6-00-0655	>	PROPOSED - TEN 10 YEAR AERIAL WATERWAY WARRANTY	1	KMEM
W6-00-0710		PROPOSED - LIFETIME POLY TANK WARRANTY - ALL TANKS	1	KMEM
W6-00-0820		PROPOSED - WATEROUS 5 YEAR PUMP WARRANTY (PARTS & LABOR)	1	KMEM
W6-00-0823	**X**	WATEROUS FCAM 5YR WARRANTY CORRECTION	1	
W6-00-1153	**S**	DEALER PROVIDES WARRANTY TRANSPORT PROP and REQ	1	DLR
W6-00-1330		PROPOSED - AKRON - 5 YEAR LIMITED WARRANTY	1	KMEM
W6-00-1340		PROPOSED - AKRON HEAVY DUTY VALVE - 10 YEAR WARRANTY	1	KMEM
W6-00-1530		PROPOSED - USSC SEATING 6 YEAR WARRANTY	1	KMEM
WA-00-0010		"AERIAL FIRE APPARATUS" NFPA 2016 STATEMENT OF EXCEPTIONS	1	KMEM

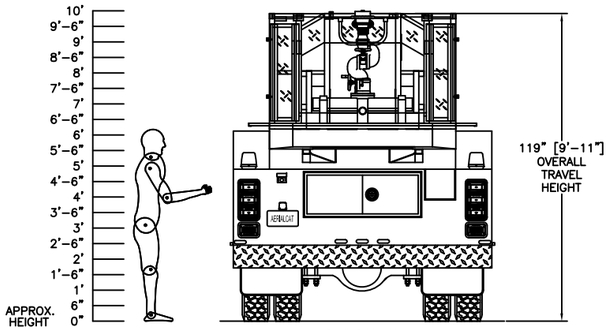

REAR VIEW

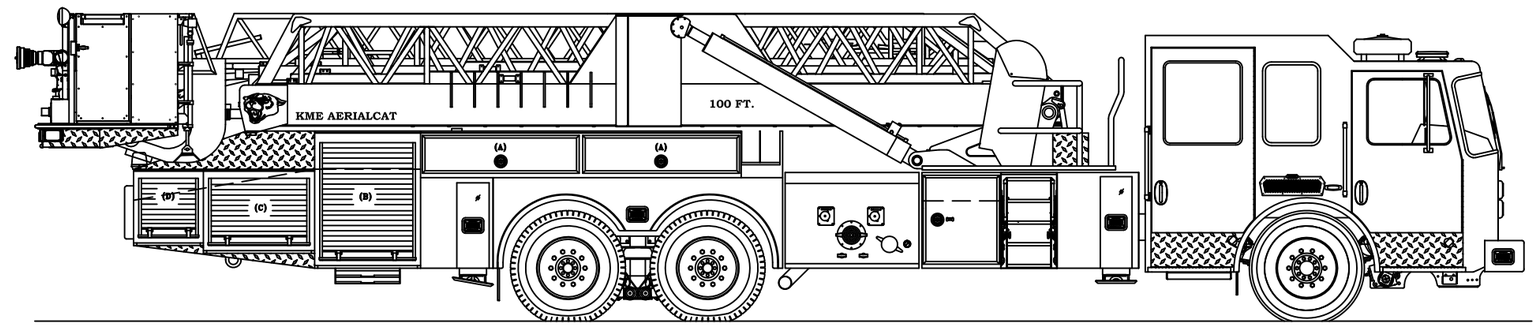

OFFICERS SIDE VIEW

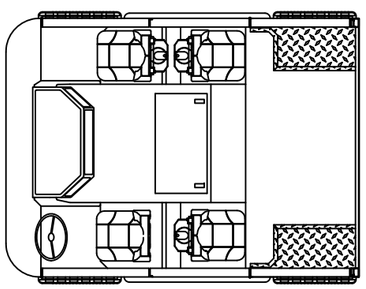

CAB INTERIOR LAYOUT

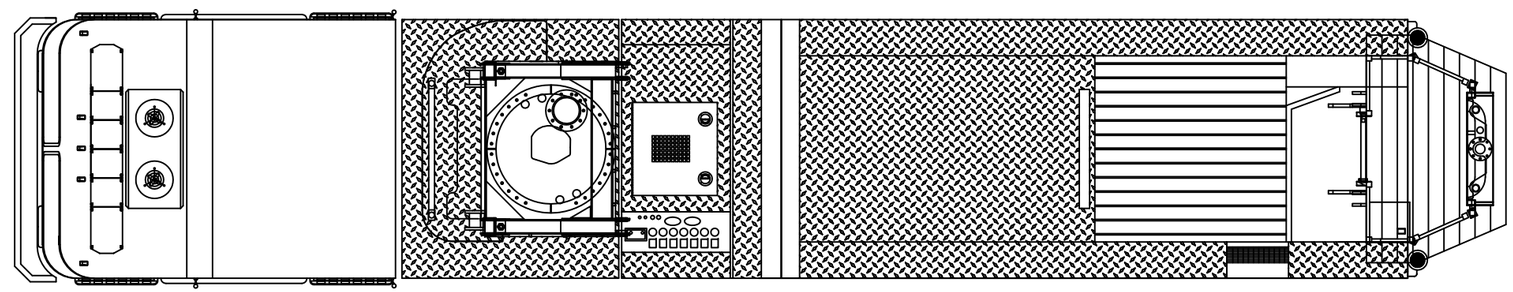

TOP VIEW

FRONT VIEW

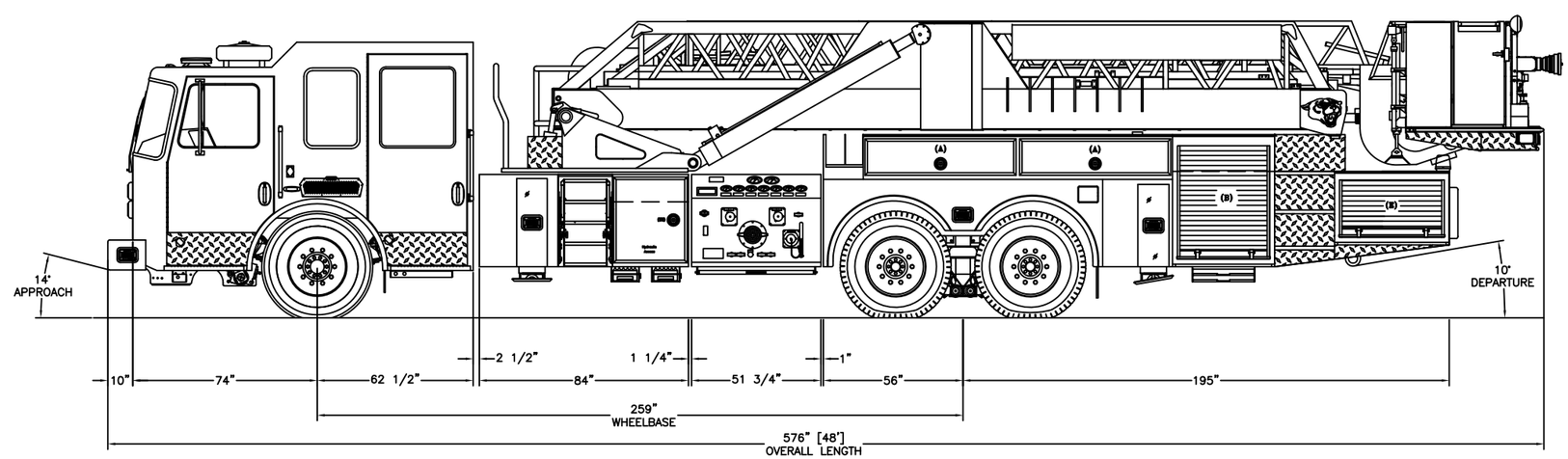

DRIVERS SIDE VIEW

CAB: 100"W PREDTAOR MFD 10" RAISED ROOF
ENGINE & TRANS. CUMMINS ISX12 450 HP/4000 EVS
AXLES: 23,000# FRONT/58,000# REAR
PUMP: WATEROUS S100 1,750 GPM SINGLE STAGE
WATER TANK: 300 GALLONS

THIS DRAWING IS A GENERAL CONFIGURATION AND MAY NOT NECESSARILY REFLECT ALL CONTRACTUAL REQUIREMENTS. CONTRACT SPECIFICATIONS SHALL PREVAIL OVER DRAWING.

CUSTOMER APPROVAL:

NAME:

TITLE:

DATE:

SYM	DATE	REVISION DESCRIPTION	APP'D

SALES ENGINEER : TBD

DIMENSIONS ARE APPROXIMATE & MAY VARY DUE TO BUILD ADJUSTMENTS

SCALE	DWG SIZE	DRAWN BY	Z.ZSCHUNKE	DATE
NONE	B	APPROVED BY	P.HOHERCHAK	9-26-16

100' MID-MOUNT PLATFORM

MAPC 4 MID-RANGE QUINT

PROPOSAL DRAWING

KME
ONE INDUSTRIAL COMPLEX - NESQUEHONING, PA 18240

KME

FCAM BASIC 102 FOOT

REAR MOUNTED AERIAL

PLATFORM

“QUINT”

MAPC 5

Quote SO

MAPC/FCAM	MAPC 5 BASIC 102' REAR MOUNT PLATFORM

Sales Rep:

Terms:

Drawing #:
Est. Delivery Date: / /
Customer PO #:
Customer #:
QPF #:

Penalty:

Quote No: 10005-0015
10/04/2016

PART NO	S	DESCRIPTION	QTY	ID
		== REAR MOUNT PLATFORM - 713.016 07/13/16 ==	**1**	**KMEM**
		== LETTERING & STRIPING, 102' RM - 713.016 07/13/16 ==	**1**	**KMEM**
		== COMPARTMENT ACCESSORIES REARMOUNT AERIAL - 713.016 07/13/16 ==	**1**	**KMEM**
		== MISC AND LOOSE EQUIPMENT (AERIAL) - 713.016 07/13/16 ==	**1**	**KMEM**
		== AERIAL WARRANTY PACKAGE W/PUMP - 713.016 07/13/16 ==	**1**	**KMEM**
		== SPECIAL, QUOTE OVERRIDE - 713.016 07/13/16 ==	**1**	**KMEM**
		DEALER ======= DEALER ======= DEALER	**1**	**DLR**
		QUOTE DATA VERSION: 0713.016 - 2016 DATA SET	**1**	**KMEM**
		INDEX OF PART NUMBERS	**1**	**KMEM**
		****** HEADER - CONTRACTS, PROPOSAL FORM, ETC @ FRONT OF SPECS**	**1**	**KMEM**
		****** PROPOSED - AERIAL SPEC BOILERPLATE**	**1**	**KMEM**
04-00-0000		PROPOSED - GENERAL INFORMATION - NFPA 1901	1	KMEM
04-00-0033		PROPOSED - COMPLETION INFO	1	KMEM
04-00-0040		PROPOSED - FMVSS CERTIFICATION	1	KMEM
04-00-0060		PROPOSED - RECORDS	1	KMEM
04-00-0075		PROPOSED - TOP OF THE LINE CHASSIS MULTIPLEX	1	KMEM
04-00-0107		PROPOSED - GENERAL CONSTRUCTION - AERIAL	1	KMEM
04-00-0120		PROPOSED - SINGLE LINE RESPONSIBILITY	1	KMEM
04-00-0130		PROPOSED - PRODUCT LIABILITY - $30,000,000.00	1	KMEM
04-00-0170		PROPOSED - CRITERIA & CODE CONFORMANCE - AERIAL	1	KMEM
04-00-0193		PROPOSED - PAINT PERFORMANCE CERTIFICATION	1	KMEM
04-00-0200		PROPOSED - AFTERMARKET SUPPORT WEBSITE	1	DLR
04-00-0490		PROPOSED - PRICES & PAYMENTS	1	KMEM
04-00-0540		PROPOSED - BOND REQUIREMENTS	1	KMEM
04-00-0560		PROPOSED - PERFORMANCE BOND	1	KMEM
04-00-0630		PROPOSED - MATERIAL & WORKMANSHIP	1	KMEM
04-00-0660		PROPOSED - CONTRACT SPECIALIST	1	KMEM
04-00-0680		PROPOSED - APPROVAL DRAWING	1	KMEM
04-00-1200		PROPOSED - DELIVERY	1	KMEM
04-00-1215		PROPOSED - INSTRUCTION MANUALS, TWO (2) SETS - CD	1	KMEM
04-00-1215		POWERPOINT DELIVERY - PROPOSAL FCAM AERIAL	1	DLR
04-00-1215	**X**	POWERPOINT DELIVERY - PROPOSAL FCAM AERIAL	1	

PART NO	S	DESCRIPTION	QTY	ID
04-00-1300		PROPOSED - VEHICLE FLUIDS PLATE	1	KMEM
04-00-1500		PROPOSED - MANUFACTURE GENERATED EXACT BLUEPRINT WITH BID	1	KMEM
04-00-1521	**X**	PROPOSED - KME and BULLDOG FAMA MEMBERSHIP	1	
04-00-1540		PROPOSED - MANUFACTURED IN THE UNITED STATES	1	KMEM
04-00-1550		PROPOSED - ISO 9001 QUALITY MANAGEMENT SYSTEM	1	KMEM
04-00-2440		PROPOSED - UNDERWRITERS LABORATORIES (UL) TESTING - AERIAL	1	KMEM
07-00-0015		"AERIAL FIRE APPARATUS" NFPA 2016 CHAPTERS OF COMPLIANCE	1	KMEM
08-00-0000		VEHICLE DATA PLATE DESCRIPTION	1	KMEM
14-00-0000		NFPA ROLLOVER STABILITY GENERAL STATEMENT	1	KMEM
15-00-0010	>	PROPOSED - PRINCIPAL APPARATUS DIMENSIONS & GVWR	1	KMEM
15-00-0050		!!! CRITICAL OVERALL HEIGHT REQUIREMENT !!! - "NO"	1	KMEM
15-00-0150		!!! CRITICAL OVERALL LENGTH REQUIREMENT !!! - "NO"	1	KMEM
AA-00-002A		SERVICE CENTER - PROPOSAL FCAM	1	DLR
BA-00-0115		<1> 102-RM-PL AERIALCAT PLATFORM	1	KMEM
BA-00-3000		SEAT AND SEAT BELT ANCHOR TESTING	1	KMEM
BA-02-0635		<2> RM PREDATOR - TANDEM AXLE- HD 102' RM	1	KMEM
BA-02-3125		<3> 138" TRAVEL HEIGHT - 102' RM	1	KMEM
BA-03-1660		<4> LO BODY, 102-RM-PL WITH PUMP	1	KMEM
BA-04-0575		AERIAL CHASSIS, REAR MOUNT PREDATOR -TANDEM AXLE (HEAVY)	1	KMEM
		****** HEADER - 100" PREDATOR CAB ******	**1**	**KMEM**
BA-04-0805		PREDATOR CAB - BASE, 100"	1	KMEM
BA-04-0850		PREDATOR CAB - BASE - ALUMINUM CONSTRUCTION	1	KMEM
BA-04-0990		PREDATOR 100" - CRASH TESTING	1	KMEM
BA-04-0995		PREDATOR 100" - 120,000# ROOF & SIDE TESTING	1	KMEM
BA-04-1300		PREDATOR 100" - MFD CAB LENGTH (DIM - 62 1/2")	1	KMEM
BA-04-1900		PREDATOR 100" - VISTA DIMENSIONS FRONT SEATING & ENGINE ENCLOSURE	1	KMEM
BA-04-4560		2010 - RM 10" RAISED w/13" ROOF NOTCH	1	KMEM
BA-04-4850		52" WIDE NOTCH AERIAL RAISED ROOF OPT	1	KMEM
BA-05-0260		BATTERY ACCESS DOORS - REAR STEP WELLS, EACH SIDE	1	KMEM
BA-05-0610		BARRIER HEIGHT CAB DOORS, 100" PREDATOR "MFD, LFD & X-LFD"	1	KMEM
BA-05-0650		CAST ANTI-SLIP ENTRY STEPS FOR REDUCED LENGTH CAB DOORS	1	KMEM
BA-05-0700		CAB DOORS - BOLT ON WEATHER STRIP	1	KMEM
BA-05-1015		PREDATOR DOOR LATCHES, HD LOOP STYLE LATCH - BARRIER HEIGHT DOORS	1	KMEM
BA-05-1035		LOCKING CAB DOOR , OUT + IN, LOOP STYLE LATCH	1	KMEM
BA-05-1037		KEY MODEL #2001	1	KMEM
BA-05-1103		WINDOWS, MANUAL HAND CRANK STYLE - 100"	1	KMEM
BA-05-1130		DOOR WINDOW TRIM EXTRUSION, 4 - DOOR	1	KMEM
BA-05-1310		UPPER INTERIOR DOOR PANELS - ABS, 4-DOOR	1	KMEM
BA-05-1410		BRUSHED ALUMINUM DOOR SCUFF PLATES, 4 - DOOR	1	KMEM
BA-05-1510		SCOTCHLITE MATERIAL ON INTERIOR OF DOOR PANEL 4-DOORS	1	KMEM
		****** HEADER - CAB EXTERIOR ACCESSORIES & OPT, 100" PREDATOR**	**1**	**KMEM**
BA-05-2410		WINDSHIELD, 100" PREDATOR CAB	1	KMEM
BA-05-2425		WINDSHIELD WIPERS & WASHERS - 100" PREDATOR	1	KMEM
BA-05-2450		SIDE VIEWING WINDOWS NON-SLIDING - PREDATOR	1	KMEM
BA-05-2500		DARK TINT WINDOWS, SIDE VIEWING, REAR DOORS & REAR WALL	1	KMEM
BA-05-2600		GRAB RAILS EXTERIOR, KNURLED ALUMINUM EXTRUSION	1	KMEM
BA-05-2668		PREDATOR INTERIOR GRAB HANDLES - WHEELABRATED	1	KMEM
BA-05-2692		INTERIOR "A" POST GRAB HANDLE "PREDATOR" - WHEELABRATED	1	KMEM
BA-05-2715		FRONT CAB GRILLE - FORMED STAINESS STEEL MIRROR FINISHED - 100" PREDATOR	1	KMEM
BA-05-2780		FRONT CAB GRILLE SCREEN - BLACK MESH - 100" PREDATOR/PANTHER	1	KMEM
BA-05-2815		SIDE CAB GRILLES - SHAPED BRIGHT FINISHED - 100" PREDATOR	1	KMEM
BA-05-2900		ALUMINUM CAB WHEEL LINERS	1	KMEM
BA-05-2910		ALUMINUM CAB FENDERETTES	1	KMEM
BA-05-3000		FRONT MUD FLAPS	1	KMEM
BA-05-3500		VELVAC MIRRORS " WEST COAST" HEATED / REMOTE - W/CONVEX SPOT	1	KMEM
BA-05-3690		MIRROR CONTROL IN MULTIPLEX CONTROL SCREEN	1	KMEM
BA-05-5115		INTERIOR TRIM, 100" PREDATOR	1	KMEM

PART NO	S	DESCRIPTION	QTY	ID
BA-05-5185		CUSTOM CAB INTERIOR PAINT - JOB COLOR	1	KMEM
BA-05-5200		PREDATOR REAR INTERIOR CAB WALL, GRAY DURAWEAR UPHOLSTERY	1	KMEM
BA-05-5335		TREAD PLATE KICK PLATE ON LOWER INTERIOR REAR WALL	1	KMEM
BA-05-5530	>	STORAGE COMPARTMENTS UNDER FRONT SEATS - 100" PREDATOR	1	KMEM
BA-05-5610		BARYFOL FLOORING	1	KMEM
BA-05-5650		1" ACOUSTICAL INSULATION	1	KMEM
BA-05-5824		ENGINE ENCLOSURE 100" PREDATOR FAB DASH (DURAWEAR)	1	KMEM
BA-05-5860		ENGINE ENCLOSURE MATERIAL - ALUMINUM CAB	1	KMEM
BA-05-7040		SUN VISORS, 100" PREDATOR CAB, PADDED VINYL	1	KMEM
BA-06-0400	>	DELETED - TOP ROLLOVER PROTECTION SYSTEM	1	KMEM
		****** HEADER - CAB SEATING & ACCESSORIES, 100" - PREDATOR MFD**	**1**	**KMEM**
		****** SEATING OPTIONS USSC, 100" - PREDATOR - MFD - NON ROLLTEK**	**1**	**KMEM**
BA-06-329H		DRIVERS SEAT, USSC AIR SUSPENSION, ABTS	1	KMEM
BA-06-389K		OFFICERS SEAT, USSC - FIXED BASE, SCBA, ABTS	1	KMEM
BA-06-3910		ZICO ULLH SCBA BOTTLE BRACKET - OFFICER'S SEAT	1	KMEM
		MFD CAB - REAR FACING USSC SEATS - NON ROLLTEK	**1**	**KMEM**
BA-06-414H		USSC SCBA ABTS REAR FACING, OUTBOARD, DS	1	KMEM
BA-06-4180		ZICO ULLH SCBA BOTTLE BRACKET - OUTBOARD, DS	1	KMEM
BA-06-424H		USSC SCBA ABTS REAR FACING, OUTBOARD, OS	1	KMEM
BA-06-4280		ZICO ULLH SCBA BOTTLE BRACKET - OUTBOARD, OS	1	KMEM
		MFD CAB - FORWARD FACING USSC SEATS - NON ROLLTEK	**1**	**KMEM**
BA-06-7200		**** DELETE FORWARD FACING SEAT RISER - NOT REQUIRED	1	KMEM
BA-06-8055		NO SCBA PARADE COVERS SUPPLIED	1	KMEM
BA-06-8150		USSC SEATING MATERIAL - BLACK CORDURA	1	KMEM
		****** HEADER - VEHICLE DATA RECORDER SYSTEMS**	**1**	**KMEM**
BA-06-9103	>	CLASS ONE SEAT BELT WARNING SYSTEM - UP TO 6 POSITIONS - ULTRAVIEW DISP	1	KMEM
BA-06-9115		FOUR (4) SEATING POSITIONS	1	KMEM
BA-06-9250	>	HELMET HOLDERS - IN CAB - ZICO	4	KMEM
BA-06-9310		CLASS ONE VEHICLE DATA RECORDER - MULTIPLEX	1	KMEM
		****** HEADER - CAB INTERIOR ACCESSORIES & OPTIONS, 100" PREDATOR**	**1**	**KMEM**
BA-07-7010	>	STANDARD #MATM RADIO ANTENNA INSTALLED	2	KMEM
		****** HEADER - INSTRUMENTATION & CONTROLS, 100" PREDATOR - NARROW VISTA**	**1**	**KMEM**
BA-08-0214		DASH & CENTER CONSOLE - 100" PREDATOR FAB DASH (UPHOLSTERED)	1	KMEM
BA-08-0275		INSTRUMENT PANEL, 100" PREDATOR - NARROW	1	KMEM
BA-08-0300		INTER AXLE LOCK CONTROL SWITCH	1	KMEM
BA-08-0315		DIESEL EXHAUST FLUID LEVEL GAUGE	1	KMEM
BA-08-0320		ENGINE COMPRESSION BRAKE CONTROLS	1	KMEM
BA-08-0620		ULTRAVIEW 450 DISPLAY ON CAB DASH FOR ES-KEY SYSTEM	1	KMEM
BA-08-1220		INDICATOR CLUSTER, 100" PREDATOR	1	KMEM
BA-08-1225		"INTER AXLE LOCK" INDICATOR CLUSTER	1	KMEM
BA-08-1235		"ATC DISABLED" INDICATOR CLUSTER	1	KMEM
BA-08-1240		"ATC ACTIVE" INDICATOR CLUSTER	1	KMEM
BA-08-1265		"OUTRIGGERS NOT STOWED" INDICATOR ON DASH	1	KMEM
BA-08-1800		LOWER RIGHT AUXILIARY SWITCH PANEL - PREDATOR - FAB	1	KMEM
BA-08-1900		PUMP SHIFT CONTROL ON LOWER LEFT DASH PANEL	1	KMEM
BA-08-1950		MULTIPLEX CONTROL PUMP SHIFT SWITCH - MULTIPLEX	1	KMEM
BA-08-2000		AERIAL LADDER, LADDER POWER/PTO SWITCHES IN CAB	1	KMEM
BA-08-2750		PREDATOR COMPUTER TERMINAL IN FRONT OF OFFICER (FABRICATED)	1	KMEM
BA-08-2905		OVERHEAD ABS PANEL, FLAT FACED, 100" PREDATOR	1	KMEM
BA-08-4415		RM HEATER/ DEFROSTER & ACCESS, PREDATOR NOTCH - 3" IN FRONT	1	KMEM
BA-08-6900		HVAC CONTROL SYSTEM - INCOPORATED INTO MULTIPLEX CONTROL DISPLAY	1	KMEM
BA-08-9000		CAB TILT SYSTEM & OPTIONS	1	KMEM
BA-08-9110		PARKING BRAKE/CAB TILT INTERLOCK	1	KMEM
		FRAME & AXLE PACKAGE, TANDEM AXLE CHASSIS (HEAVY)	**1**	**KMEM**
BA-09-5200		110,000 PSI FRAME: AERIAL CHASSIS TRIPLE FRAME	1	KMEM
		HEADER - FRONT BUMPER, EXTENSIONS & ACCESSORIES	**1**	**KMEM**
BA-10-0057	>	BUMPER 12" PAINTED 3/8" STEEL BUMPER - ALL CABS	1	KMEM

PART NO	S	DESCRIPTION	QTY	ID
BA-10-0110		10" FRONT BUMPER EXTENSION WITH TREAD PLATE GRAVEL SHIELD	1	KMEM
BA-10-0405		TREADPLATE GRAVEL SHIELD STANDARD INSTALLATION	1	KMEM
BA-10-2010		TWO (2) PAINTED TOW HOOKS BELOW FRONT BUMPER	1	KMEM
BA-10-5000		AERIAL TRAVEL SUPPORT FOR ANY REAR MOUNT TYPE AERIAL	1	KMEM
BA-14-0170		23,000# FRONT AXLE MERITOR MFS-20-133A-N	1	KMEM
BA-14-1110		MERITOR, EX-225 17" DISC BRAKES, FRONT AXLE, W/ AUTO SLACK ADJUSTMENT	1	KMEM
BA-14-2040		SUSPENSION FRONT - 23,000# AXLES	1	KMEM
BA-14-2095		**AERIAL DEVICE TRAVEL HEIGHT CRITICAL!!!! ** REQUIRES SMALL AXLE SPACER	1	KMEM
BA-14-2110		FRONT AXLE SHOCK ABSORBERS - MONROE "MAGNUM - 70"	1	KMEM
BA-15-1050		54,000# TANDEM REAR AXLE MERITOR RT-52-185	1	KMEM
BA-15-1510		16.5" X 7" S-CAM BRAKES - MERITOR REAR TANDEM W/AUTO SLACK ADJ.	1	KMEM
BA-15-2810		VEHICLE TOP SPEED - 2016 NFPA STATEMENT	1	KMEM
BA-15-4640	>	RIDEWELL "DYNALASTIC" 202S RUBBER BLOCK SUSPENSION, TANDEM AXLE 58,000#	1	KMEM
		****** HEADER - BRAKE SYSTEM, TANDEM AXLE VEHICLE**	**1**	**KMEM**
BA-20-1005		BRAKE SYSTEM, TA CHASSIS	1	KMEM
BA-20-1110		ABS BRAKING FOR TANDEM REAR AXLE CHASSIS	1	KMEM
BA-20-1275	>	ELECTRONIC STABILITY CONTROL (ESC) WITH (ATC) - CUSTOM TA	1	KMEM
BA-20-1530		AIR RESERVOIRS 7100 CU IN TA, BASE	1	KMEM
BA-20-2025		1/4 TURN DRAIN VALVES ON ALL AIR TANKS	1	KMEM
BA-20-3000		AIR DRYER, HEATED - BENDIX AD-9 12VOLT	1	KMEM
BA-20-5005		COLOR CODED SYNFLEX BRAKE LINES W/QUICK RELEASE FITTINGS - TA	1	KMEM
BA-20-5500		AIR COMPRESSOR -WABCO 18.7 CFM- STD. FOR ALL CUMMINS ENGINES	1	KMEM
BA-20-5810		BRAKE TREADLE VALVE	1	KMEM
BA-20-6010		PARKING BRAKE CONTROL - NEAR DRIVER - ALL WHEEL LOCK	1	KMEM
		HEADER, TIRE AND WHEEL OPTIONS	**1**	**KMEM**
		HEADER, WHEELS, 23,000 FRONT AXLE - ALUMINUM	**1**	**KMEM**
BA-25-1010		FRONT WHEELS, MILL ALUMINUM DISC TYPE - PAINTED 22.5 X 13, 24,390#	1	KMEM
BA-25-1020		FRONT WHEELS, LUG AND HUB TRIM (MILL ALUM WHEELS)	1	KMEM
BA-25-2030	>	FRONT, GOODYEAR 425/65R22.5 L 24,400# G296 MSA MIXED - 68MPH	1	KMEM
BA-25-2400		GOODYEAR - FIRE SERVICE RATING - TIRE RESTRICTIONS	1	KMEM
		HEADER, TIRES & WHEELS, 54,000 TANDEM REAR AXLE	**1**	**KMEM**
BA-25-5015	>	REAR WHEELS, STEEL DISC TYPE, 22.5 X 9, TA	1	KMEM
BA-25-5040		REAR WHEELS, LUG AND HUB TRIM, TA (STEEL)	1	KMEM
BA-25-7055	>	REAR, GDYR 315/80R22.5 J 64,000# RHD II+ TRACTION - 75MPH, TA	1	KMEM
BA-25-7400		GOODYEAR - FIRE SERVICE RATING - TIRE RESTRICTIONS	1	KMEM
BA-25-9905		TIRE PRESSURE MONITORING - LED VALVE STEM CAPS - TEN TIRES	1	KMEM
		100" PREDATOR - ENGINE PACKAGE, HEAVY TANDEM AXLE CHASSIS	**1**	**KMEM**
		****** 100" - HEADER, ENGINE & ENGINE COMPONENTS**	**1**	**KMEM**
BA-30-3195	>	CUMMINS ISX12 - 450 HP @ 1800 RPM TQ 1550 lb-ft @ 1100 - PREDATOR NARROW	1	KMEM
BA-30-9810		PROPOSED - ENGINE CERTIFICATION CUSTOM CHASSIS	1	KMEM
BA-32-0035		COOLING/RADIATOR, 100" PREDATOR - NARROW	1	KMEM
BA-32-0070		ENGINE COOLANT FILTER - CUMMINS ISC - ISX	1	KMEM
BA-32-0085		COOLING SYSTEM CRITERIA	1	KMEM
BA-32-0100		TRANSMISSION COOLER	1	KMEM
BA-32-0120		RADIATOR SKID PLATE	1	KMEM
BA-32-0160		CHARGED AIR COOLER (FRONT MOUNT)	1	KMEM
BA-32-0245		COOLANT FAN, W/CLUTCH - CUMMINS ISX12	1	KMEM
BA-32-0340		HEATER AND COOLANT HOSES/PIPING	1	KMEM
BA-32-0420		LOW COOLANT INDICATOR LIGHT AND ALARM IN CAB	1	KMEM
BA-33-0020	>	SECONDARY BRAKING - ENGINE COMPRESSION BRAKE	1	KMEM
BA-33-0150		FAST IDLE CONTROL FOR ALL ELECTRONIC ENGINES - SMART WHEEL	1	KMEM
BA-33-0160		ENGINE AIR CLEANER	1	KMEM
BA-33-0180		SPARK ARRESTOR	1	KMEM
BA-33-0200		ACCELERATOR PEDAL - FLOOR MOUNT	1	KMEM
BA-33-0250		REMOTE THROTTLE & INTERLOCK HARNESS	1	KMEM
BA-40-0300		ALLISON 4000EVS TRANS. - COMPRESSION BRAKE	1	KMEM

PART NO	S	DESCRIPTION	QTY	ID
BA-40-0660		FIVE (5) SPEED AUTOMATIC TRANSMISSION - 4000 SERIES	1	KMEM
BA-40-0700		ALLISON TRANSMISSIONS, ELECTRONIC TOUCH PAD SHIFTER IN CAB	1	KMEM
BA-40-0855		TRANSMISSION OIL LEVEL SENSOR	1	KMEM
BA-40-0860		ALLISON PARK TO NEUTRAL	1	KMEM
BA-40-0910		ALLISON PRESELECT PROGRAMMING	1	KMEM
BA-40-0920		PRESELECT PROGRAMMED FOR 4TH GEAR	1	KMEM
BA-40-4720		TES-389 TRANS FLUID 4000EVS TRANSMISSION	1	KMEM
BA-45-0110		DRIVE LINES DANA-SPICER #1810 SERIES	1	KMEM
BA-49-0100		DIESEL EXHAUST FLUID TANK - 5 GALLON	1	KMEM
BA-50-0110		EXHAUST SYSTEM - DPF & SCR SYSTEM - INLINE SYSTEM	1	KMEM
BA-50-0155		ALUMINIZED STEEL EXHAUST TAILPIPE/OUTLET OS - DPF + SCR SYSTEM	1	KMEM
BA-50-2500		FUEL SYSTEM	1	KMEM
BA-50-2510		FUEL TANK - 65 GALLON, STEEL	1	KMEM
BA-50-2625		FUEL LINES - FIBER REINFORCED HOSE	1	KMEM
BA-50-2645	>	CUMMINS FUEL-WATER SEPARATOR	1	KMEM
BA-50-2670		FUEL PUMP SECONDARY ELECTRIC, REQ. ON 210" W-B OR LONGER	1	KMEM
BA-50-2700		FUEL POCKET, LEFT SIDE REAR WHEEL WELL PANEL	1	KMEM
BA-50-5050	>	STEERING - DUAL SHEPPARD POWER STEERING GEARS	1	KMEM
BA-50-7115		STEERING COLUMN - CLOCK SPRING "NARROW"	1	KMEM
BA-50-7155		18" STEERING WHEEL - 4 SPOKE - "NARROW"	1	KMEM
BA-50-9000		ROAD SAFETY KITS	1	KMEM
		****** HEADER, RM PLATFORM CHASSIS ELECTRICAL, 100" PREDATOR (OPTIONS)**	**1**	**KMEM**
		****** HEADER, RM PLATFORM W/ PUMP BODY ELECTRICAL (OPTIONS)**	**1**	**KMEM**
BE-01-0005		PREDATOR CHASSIS ELECTRICAL SYSTEM DESCRIPTION	1	KMEM
BE-01-0105		PREDATOR CHASSIS WIRING INSTALLATION	1	KMEM
BE-01-0150		DIRECT BATTERY GROUNDING STRAP - PREDATOR	1	KMEM
BE-01-0153		EMI/RFI PROTECTION	1	KMEM
BE-01-0205		PREDATOR 12 VOLT ELECTRICAL SYSTEM TESTING	1	KMEM
BE-05-0353		CLASS-1 ES-KEY MULTI-PLEXED ELECTRICAL SYSTEM 100" PREDATOR	1	KMEM
BE-05-0450		CLASS-1 ES-KEY ULTRAVIEW 450 DISPLAY	1	KMEM
BE-05-0800		INTER-LOCK MODULE FOR MULTIPLEX SYSTEM	1	KMEM
BE-05-0900		CHASSIS DIAGNOSTICS SYSTEM	1	KMEM
BE-05-1160		VOLTAGE MONITORING SYSTEM - 12 VOLT	1	KMEM
BE-05-1165		INDICATOR LIGHT AND ALARM PROVE-OUT SYSTEM	1	KMEM
BE-05-1170		SEQUENCER	1	KMEM
BE-05-1175		ELECTRICAL HARNESS INSTALLATION - 12 VOLT	1	KMEM
BE-10-0407		LEECE NEVILLE - 270 AMP 4949PA - ALTERNATOR	1	KMEM
BE-15-0680		BATTERIES - FIVE (5) EXIDE GROUP 31, 925CCA	1	KMEM
BE-15-1105		PREDATOR BATTERY STORAGE, STEEL, MFD, XMFD, LFD, XLFD	1	KMEM
BE-15-1500		BATTERY DISCONNECT SWITCH, ALL UNITS	1	KMEM
BE-15-1555		COLE HERSEE BATTERY JUMPER STUDS, DS BATTERY BOX	1	KMEM
BE-20-1600		12 VOLT POLARIZED CHARGE RECEPTACLE	1	KMEM
BE-20-1715		SHORELINE RECEPTACLE LABEL - NFPA	1	KMEM
BE-20-1750		SHORELINE LOCATION - ADJACENT TO DRIVER'S DOOR	1	KMEM
BE-30-0100		CONTROL SWITCHING - EATON MULTIPLEX SWITCHES - 12 ABOVE DRIVER	1	KMEM
BE-30-0120		CONTROL SWITCHING - EATON MULTIPLEX SWITCHES - 9 LOWER PANEL	1	KMEM
BE-30-2500		CONTROL SWITCHING LABELING	1	KMEM
BF-00-0515		WELDON #8080-8000-13 WHITE/RED LED INTERIOR LIGHTS (4)	1	KMEM
BF-00-5000		DOOR OPEN INDICATOR W/ INTEGRAL AUDIBLE ALARM	1	KMEM
		****** HEADER, 12V POWER/ USB CHARGING/ POWER - GROUND CIRCUITS, CUSTOM ******	**1**	**KMEM**
BF-01-1020	>	12 VOLT POWER PORT LOCATED IN CAB AS DIRECTED	1	KMEM
BF-01-3000	>	ROUND USB CHARGING PORT LOCATED IN CAB AS DIRECTED	1	KMEM
BF-01-6000		12 VOLT POWER AND GROUND CIRCUIT FOR ACCESSORIES IN DASH	1	KMEM
		****** HEADER, REAR/SIDE VISION CAMERA SYSTEMS ******	**1**	**KMEM**
BF-20-0000		DUAL HEADLIGHTS, HALOGEN, PREDATOR - DUAL BEZELS	1	KMEM
BF-20-0320		DAYTIME RUNNING LIGHTS, ALL CABS	1	KMEM
BG-00-0055		DUAL MODULE w/ CODE 3 65STA LED TURN SIGNAL & REQ WARN LIGHT	1	KMEM
BG-00-0410		CUST RM PLATFORM CHASSIS LED MARKER LIGHTS	1	KMEM

PART NO	S	DESCRIPTION	QTY	ID
BG-00-0510		CUST RM PLATFORM BODY LED MARKER LIGHTS	1	KMEM
BG-00-1250		WHELEN # LED MARKER LIGHTS @ TOP ROOF EDGE OF CAB RM PLAT	1	KMEM
BG-00-1300		STAINLESS STEEL MOUNTING PLATE FOR CENTER THREE MARKER LIGHTS - AERIAL NOTCH	1	KMEM
BG-00-1600		TRUCK-LITE MARKER LIGHTS @ EA SIDE OF CAB, ADJACENT TO DRIVER DOOR	1	KMEM
BG-00-1610		TRUCK-LITE MARKER/TURN LIGHTS @ EA SIDE OF BODY	1	KMEM
BG-00-1660		TRUCK-LITE MARKER LIGHTS @ REAR OF BODY	1	KMEM
BG-00-1800		TRUCK-LITE DOT AMBER REFLECTORS @ SIDE OF BODY	1	KMEM
BG-00-1810		TRUCK-LITE DOT RED REFLECTORS @ REAR OF BODY	1	KMEM
BG-00-2915		TECNIQ #L10 LED LICENSE PLATE LIGHT @ DS REAR OF BODY	1	KMEM
BG-02-1500		WELDON #2010 HAL. BRAKE, REVERSE, & TURN	1	KMEM
BH-04-1050		CAB STEP LIGHTS, TECNIQ EON 3 LED, ALL DEVICES	4	KMEM
BH-04-1130		BODY STEP LIGHTS, TECNIQ EON 3 LED, ALL DEVICES	4	KMEM
BH-05-1625		DUNNAGE AREA LIGHTING, TECNIQ EON 3 LED	1	KMEM
BH-05-2300		AERIAL ACCESS LADDER ILLUMINATION - WHELEN 3" LED - RM BODY	1	KMEM
	>	****** HEADER, HOSE BED LIGHTING ******	**1**	**KMEM**
BH-06-0100		UNITY HOSE BED LIGHTS, ALL DEVICES	1	KMEM
BH-06-2200		HOSE BED WORK LIGHT - SWITCH	1	KMEM
		****** HEADER, SCENE LIGHTS - CUSTOM CHASSIS ******	**1**	**KMEM**
		****** HEADER, SCENE LIGHTS - LADDER/PLATFORM W/ PUMP**	**1**	**KMEM**
BH-11-0500		NFPA (4) JW SPEAKER LED RECTANGLE GROUND LIGHTS, BELOW CAB DOORS	1	KMEM
BH-11-0560		GROUND LIGHTS, 2 LED BELOW PUMP PANEL RUNNING BOARD - RH	1	KMEM
BH-11-0585		GROUND LIGHTS, 2 LED, AT REAR BODY CORNERS - RH	1	KMEM
		****** HEADER, BROW LIGHTS - CUSTOM RM PLATFORM**	**1**	**KMEM**
		****** HEADER, TELESCOPING LIGHTS, REAR OF CAB - CUSTOM CHASSIS**	**1**	**KMEM**
BI-00-0200		AERIAL BODY ELECTRICAL SYSTEM	1	KMEM
BI-00-0205		AERIAL BODY ELECTRICAL JUNCTION COMPARTMENT	1	KMEM
BI-00-0210		REAR-MOUNT, AERIAL DEVICE ELECTRICAL JUNCTION COMPARTMENT	1	KMEM
BI-00-0525		BODY ELECTRICAL HARNESS - ES-KEY	1	KMEM
BJ-00-5115		PUMP ENCLOSURE WORK LIGHTS - TECNIQ LED	1	KMEM
BJ-00-5165		ENGINE COMPARTMENT WORK LIGHTS - TECNIQ LED	1	KMEM
		COMPARTMENT LIGHTS - REAR MOUNT TANDEM AXLE	**1**	**KMEM**
BJ-02-1055	>	COMPT. LIGHTS, TECNIQ E18 LED	16	KMEM
		****** HEADER, 12V BODY FLOOD LIGHTING - RM LAD/PLAT/WT W/ PUMP ******	**1**	**KMEM**
		****** CUSTOM REAR MOUNT AERIAL NFPA WARNING LIGHT PACKAGE**	**1**	**KMEM**
BL-95-0000		NFPA COMPLIANT WARNING LIGHT PACKAGE - ALL UNITS	1	KMEM
BL-95-0100		LIGHT PACKAGE ACTUATION/CONTROLS - ALL UNITS	1	KMEM
BL-98-0000		WARNING LIGHT FLASH PATTERN - NFPA FLASH PATTERN	1	KMEM
BM-00-0200		CODE 3 UPPER PACKAGE - CUSTOM REAR MOUNT AERIAL	1	KMEM
BM-02-0072		A-UPPER, CODE 3 LED 2718NFPA1, RX 2700 18" PRIZM II BAR PAIR	1	KMEM
BM-02-1000		C-UPPER, CODE 3 HALOGEN 550 BEACONS, RED DRIVER, AMBER OFFICER	1	KMEM
BM-02-2000		B/D-UPPER REAR, COVERED BY LIGHTS IN ZONE C-UPPER	1	KMEM
BM-02-3000		B/D-UPPER FRONT, COVERED BY LIGHTS IN ZONE A-UPPER	1	KMEM
BM-07-0200		CODE 3 LOWER PACKAGE - CUSTOM REAR MOUNT AERIAL	1	KMEM
BM-09-0018	>	A-LOWER FRONT, CODE 3 65 SERIES LED	1	KMEM
BM-09-0098		A-LOWER FRONT MOUNTING, CUSTOM CHASSIS	1	KMEM
BM-09-1014	>	C-LOWER REAR, CODE 3 65 SERIES LED	1	KMEM
BM-09-2006	>	B/D-LOWER FRONT, CODE 3 65 SERIES LED	1	KMEM
BM-09-2098		B/D-LOWER FRONT MOUNTING, CUSTOM CHASSIS	1	KMEM
BM-09-3006	>	B/D-LOWER MID, CODE 3 65 SERIES LED	1	KMEM
BM-09-3506	>	B/D-LOWER SECONDARY MID, CODE 3 65 SERIES LED	1	KMEM
BM-09-4006	>	B/D-LOWER REAR, CODE 3 65 SERIES LED	1	KMEM
BM-15-0000		LIGHT PACKAGE NFPA CERTIFICATION - ALL UNITS	1	KMEM
		****** HEADER, OPTIONAL WARNING LIGHTS**	**1**	**KMEM**
		****** HEADER, AUDIBLE WARNING & COMMUNICATION EQUIPMENT**	**1**	**KMEM**
BW-00-0510		CHASSIS SINGLE ELECTRIC (DOT) HORN	1	KMEM
BW-00-0560		CODE 3, #CA278, BACK-UP ALARM - 87DBA	1	KMEM
BW-00-5295		DELETE STANDARD DUAL AIRHORNS	1	KMEM

PART NO	S	DESCRIPTION	QTY	ID
BW-01-0120		SIREN, WHELEN # 295HFS2, 100W - FLUSH MOUNT	1	KMEM
BW-01-1000		ONE (1) WHELEN SP123BMC SPEAKER	1	KMEM
		****** HEADER, PUMP, TANK & ACC, 102' PLAT 3-SECT, RM, LO**	**1**	**KMEM**
DC-00-2335		WATEROUS CSU-C20-1500 SINGLE STAGE PUMP	1	KMEM
DC-01-4600		WATEROUS PUMP PACKING	1	KMEM
DC-01-6210		WATEROUS "C20" PUMP DRIVE UNIT, ALL WATEROUS MID-SHIP PUMPS	1	KMEM
DC-01-6490		PUMP RATIO (HALE, WATEROUS OR DARLEY)	1	KMEM
DC-01-7140		WATEROUS AIR SHIFT	1	KMEM
DC-01-8590		PUMP SHIFT MANUAL OVERRIDE (HALE, WATEROUS OR DARLEY)	1	KMEM
DC-01-8615		WATEROUS PUMP SHIFT INDICATOR LIGHTS	1	KMEM
DC-01-9020		TRANSMISSION LOCK-UP (HALE, WATEROUS OR DARLEY)	1	KMEM
DC-02-1900		PUMP MOUNTS - MID-SHIP PUMPS	1	KMEM
DC-02-1990		PUMP INSTALLATION - CUSTOM	1	KMEM
		****** HEADER, WATEROUS CSU, CMU, PRESSURE CONTROL**	**1**	**KMEM**
DC-05-1225		FIRE RESEARCH "IN CONTROL" TGA-300 PRESSURE GOVERNOR	1	KMEM
DC-05-1295		TASK FORCE TIPS #A18 SERIES INTAKE RELIEF VALVE	1	KMEM
DC-05-2500		PUMP UL CERTIFICATION - 750 GPM & UP	1	KMEM
		WATEROUS, PUMP PRIMING PUMP AND CONTROLS	**1**	**KMEM**
DC-05-3680	>	TRIDENT "MANUAL" AIR PRIMING SYSTEM	1	KMEM
		WATEROUS, DRAINS & ACCESSORES	**1**	**KMEM**
DC-05-5110		ROTARY MASTER DRAIN VALVE	1	KMEM
DC-05-5400		DRAINS/BLEEDER "INNOVATIVE CONTROLS" LIFT UP @ ALL 1-1/2" OR LARGER	1	KMEM
DC-05-5500		SYNFLEX SUCTION, DISCHARGE, PRESSURE AND CONTROL LINES	1	KMEM
DC-10-2004		SIDE MOUNT PUMP MODULE, HD, RM AERIAL	1	KMEM
DC-10-2500		PUMP MODULE - STEEL CONSTRUCTION	1	KMEM
		****** HEADER, SUCTIONS - REARMOUNT TA-HD, SIDE MOUNT**	**1**	**KMEM**
DC-14-3210		WATEROUS MAIN SUCTION INLETS 6" NST, 1500 GPM CSU PUMP	1	KMEM
DC-14-5300		SHORT NECK MAIN PUMP SUCTION INLETS - DS & OS	1	KMEM
DC-14-5560	>	6" NST MAIN PUMP SUCTION PRESSURE VENTED CAPS (2)	1	KMEM
		HEADER - AUXILIARY SUCTION/S - AERIALS	**1**	**KMEM**
DC-20-1000		2 1/2" AUX. SIDE SUCTION @ DS PANEL TO REAR OF MAIN INLET	1	KMEM
DC-20-1100		2 1/2" AKRON #8800 S.S. BALL VALVE, DS REAR AUX SUCTION	1	KMEM
DC-20-1200		SWING CONTROL @ VALVE, DS REAR AUX SUCTION	1	KMEM
DC-20-9500		BEHIND PANEL MOUNT	1	KMEM
		****** HEADER - TANK TO PUMP - HD REARMOUNTS**	**1**	**KMEM**
DC-25-1200		TANK TO PUMP - 3" VALVE - LADDERS & PLATFORMS	1	KMEM
DC-25-3110		3" AKRON #8800 SERIES - S.S. BALL, VALVE , TANK TO PUMP	1	KMEM
DC-25-5110		3" PUSH/PULL CONTROL FOR TANK TO PUMP	1	KMEM
		****** HEADER - TANK FILL - HD REARMOUNT**	**1**	**KMEM**
DC-30-2100		TANK FILL LINE 2" FROM PUMP - SIDE MOUNT	1	KMEM
DC-30-2300		2" AKRON #8800 SERIES - S.S. BALL TANK FILL, SIDE MOUN	1	KMEM
DC-30-6500		PUSH/PULL CONTROL FOR TANK FILL	1	KMEM
		****** DISCHARGES & ACCESSORIES, RM-TA-HD AERIAL - SIDE MOUNT**	**1**	**KMEM**
		DRIVER'S SIDE #1 MAIN DISCHARGE	**1**	**KMEM**
DC-35-0010		DS MAIN DISCHARGE #1 - SIDE MOUNT	1	KMEM
DC-35-0110		2 1/2" AKRON #8800 SERIES - S.S. BALL, DS #1, SIDE MOUNT	1	KMEM
DC-35-1815		DS #1 DISCH - 2 1/2" STRAIGHT NST & 30-DEGREE NST ELBOW	1	KMEM
DC-35-2010		2 1/2" NST PRESSURE VENTED CAP - DS DISCHARGE #1	1	KMEM
DC-35-2410		PUSH/PULL CONTROL FOR DS DISCHARGE #1 -SIDE MOUNT	1	KMEM
DC-35-3110		INNOVATIVE CONTROLS LIQUID FILLED 2 1/2" PRESS GAUGE SS- DS DISCHARGE #1	1	KMEM
		DRIVER'S SIDE #2 MAIN DISCHARGE	**1**	**KMEM**
DC-35-5010		DS MAIN DISCHARGE #2 - SIDE MOUNT	1	KMEM
DC-35-5110		2 1/2" AKRON #8800 SERIES - S.S. BALL, DS #2, SIDE MOUNT	1	KMEM
DC-35-6815		DS #2 DISCH - 2 1/2" STRAIGHT NST & 30-DEGREE NST ELBOW	1	KMEM
DC-35-7010		2 1/2" NST PRESSURE VENTED CAP - DS DISCHARGE #2	1	KMEM
DC-35-7410		PUSH/PULL CONTROL FOR DS DISCHARGE #2 -SIDE MOUNT	1	KMEM
DC-35-8110		INNOVATIVE CONTROLS LIQUID FILLED 2 1/2" PRESS GAUGE SS- DS DISCHARGE #2	1	KMEM

PART NO	S	DESCRIPTION	QTY	ID
		OFFICER'S SIDE #1 MAIN DISCHARGE	**1**	**KMEM**
DC-39-0010	>	OS MAIN DISCHARGE #1 - SIDE MOUNT	1	KMEM
DC-39-0110		2 1/2" AKRON #8800 SERIES - S.S. BALL, OS #1, SIDE MOUNT	1	KMEM
DC-39-1815		OS #1 DISCH - 2 1/2" STRAIGHT NST & 30-DEGREE NST ELBOW	1	KMEM
DC-39-2010		2 1/2" NST PRESSURE VENTED CAP - OS DISCHARGE #1	1	KMEM
DC-39-2410		PUSH/PULL CONTROL FOR OS DISCHARGE #1 -SIDE MOUNT	1	KMEM
DC-39-3110		INNOVATIVE CONTROLS LIQUID FILLED 2 1/2" PRESS GAUGE SS- OS DISCHARGE #1	1	KMEM
		OFFICER'S SIDE #2 MAIN DISCHARGE	**1**	**KMEM**
DC-39-5010	>	OS MAIN DISCHARGE #2 - SIDE MOUNT	1	KMEM
DC-39-5080	>	**** WATEROUS PUMP LDH DISCHARGE PORT ****	1	KMEM
DC-39-5110		2 1/2" AKRON #8800 SERIES - S.S. BALL, OS #2, SIDE MOUNT	1	KMEM
DC-39-6815		OS #2 DISCH - 2 1/2" STRAIGHT NST & 30-DEGREE NST ELBOW	1	KMEM
DC-39-7010		2 1/2" NST PRESSURE VENTED CAP - OS DISCHARGE #2	1	KMEM
DC-39-7410		PUSH/PULL CONTROL FOR OS DISCHARGE #2 -SIDE MOUNT	1	KMEM
DC-39-8110		INNOVATIVE CONTROLS LIQUID FILLED 2 1/2" PRESS GAUGE SS- OS DISCHARGE #2	1	KMEM
		CROSSLAY #1 DISCHARGE	**1**	**KMEM**
DC-47-0400		CROSSLAY #1, 1 1/2" - AERIAL	1	KMEM
DC-47-1110		CROSSLAY #1 CAPACITY - 200' OF 1 3/4" HOSE	1	KMEM
DC-47-1410		CROSSLAY #1 - DOUBLE STACK HOSE DESIGN	1	KMEM
DC-47-1510		1 1/2" NST CHICKSAN SWIVEL - CROSSLAY #1	1	KMEM
DC-47-2110		CROSSLAY #1, PLUMBING, 2" STAINLESS STEEL PIPING	1	KMEM
DC-47-2210		2" AKRON #8800 SERIES - S.S. BALL, VALVE CROSSLAY #1, DISCH	1	KMEM
DC-47-2610		PUSH/PULL 1/4 TURN CONTROL CROSSLAY #1	1	KMEM
DC-47-3210		INNOVATIVE CONTROLS LIQUID FILLED 2 1/2" PRESS GAUGE SS - CROSSLAY #1	1	KMEM
		CROSSLAY #2 DISCHARGE	**1**	**KMEM**
DC-47-5400		CROSSLAY #2, 1 1/2" - AERIAL	1	KMEM
DC-47-6110		CROSSLAY #2 CAPACITY - 200' OF 1 3/4" HOSE	1	KMEM
DC-47-6410		CROSSLAY #2 - DOUBLE STACK HOSE DESIGN	1	KMEM
DC-47-6510		1 1/2" NST CHICKSAN SWIVEL - CROSSLAY #2	1	KMEM
DC-47-7110		CROSSLAY #2, PLUMBING, 2" STAINLESS STEEL PIPING	1	KMEM
DC-47-7210		2" AKRON #8800 SERIES - S.S. BALL, VALVE CROSSLAY #2,	1	KMEM
DC-47-7610		PUSH/PULL 1/4 TURN CONTROL CROSSLAY #2	1	KMEM
DC-47-8210		INNOVATIVE CONTROLS LIQUID FILLED 2 1/2" PRESS GAUGE SS - CROSSLAY #2	1	KMEM
		CROSSLAY & SPEEDLAY OPTIONS - RM AERIAL	**1**	**KMEM**
DC-50-7015	>	VINYL CROSS LAY COVER	1	KMEM
DC-50-7030		CROSSLAY COVER RED IN COLOR	1	KMEM
	>	**WATERWAY DISCHARGE**	**1**	**KMEM**
DC-62-0220		AERIAL WATERWAY DISCHARGE - TA-HD AERIAL	1	KMEM
DC-62-1145		WATERWAY DISCHARGE, PLUMBING, 5" STAINLESS STEEL - RM	1	KMEM
DC-62-1240		4" AKRON #8840 SERIES VALVE, WATERWAY	1	KMEM
DC-62-1950	>	AKRON HANDWHEEL GEAR VALVE CONTROL, WATERWAY	1	KMEM
DC-62-2210		INNOVATIVE CONTROLS LIQUID FILLED 2 1/2" PRESS GAUGE SS - WATERWAY	1	KMEM
		PUMP PANELS & ACCESSORIES	**1**	**KMEM**
DD-65-0505		SIDE MOUNT PUMP PANEL - RM AERIAL	1	KMEM
DD-65-4115		SIDE MOUNT PANELS - 12 GAUGE BRUSHED STAINLESS STEEL	1	KMEM
DD-65-4710		VERTICALLY HINGED GAUGE PANEL - SIDE MOUNT	1	KMEM
DD-65-4810		OFFICER SIDE VERTICALLY HINGED PUMP ACCESS DOOR - SIDE MOUNT	1	KMEM
DD-65-5150		PANEL FASTENERS	1	KMEM
DD-65-5510		CAPS AND ADAPTERS SAFETY TETHER - BALL CHAIN	1	KMEM
DD-65-8820		PUMP PANEL DISCH./SUCTION TRIM PLATES, HIGH POLISHED	1	KMEM
DD-65-9000		DISCHARGE GAUGE TRIM BEZELS	1	KMEM
DD-65-9110		IDENTIFICATION PLATES	1	KMEM
DD-66-0100		PUMP OPERATOR'S PANEL LIGHT SHIELD	1	KMEM
DD-66-0105		WELDON #2630 HALOGEN LIGHTS - LIGHT SHIELD	1	KMEM
DD-66-2100		OS PUMP PANEL LIGHTING	1	KMEM

PART NO	S	DESCRIPTION	QTY	ID
DD-66-2105		WELDON #9186 HALOGEN LIGHTS - OS PUMP PANEL	1	KMEM
		PUMP OPERATOR'S PANEL - SIDE MOUNT, AERIAL	**1**	**KMEM**
DD-70-2334		FIRE RESEARCH "IN CONTROL" PRESSURE GOVERNOR CONTROL @ PANEL	1	KMEM
DD-70-2410		PUMP PRESSURE & VACUUM TEST PORTS @ PANEL	1	KMEM
DD-70-4125	>	DELETE - MASTER PRESSURE & COMPOUND GAUGES	1	KMEM
DD-70-4130		**** CONSIDER DELETING MASTER GAUGES - IN GOVERNOR DISPLAY ****	1	KMEM
DD-70-4680		PRESSURE & COMPOUND GAUGE RANGES - SINGLE STAGE	1	KMEM
DD-70-4900		AUXILIARY ENGINE COOLER	1	KMEM
		WATER TANK LEVEL GAUGE - AERIAL	**1**	**KMEM**
DD-72-0410		FIRE RES - TANK VISION #WLA300-A00 LED WATER TANK GAUGE - PRIMARY	1	KMEM
DD-72-1300	>	FIRE RES WATER LEVEL - 1/4" NPT PRESS TRANS @ BOTTOM TANK	1	KMEM
DD-80-0110		SLIDE-OUT STEP @ DRIVER'S PUMP OPERATOR'S PANEL	1	KMEM
DE-00-1050	>	**** HEADER, 95' & 102' REAR MOUNT PLATFORM, WATER TANK	1	KMEM
		WATER TANKS/OPTIONS AERIALS	**1**	**KMEM**
DE-05-1700	>	UPF POLYIIE TANK, 300 GAL. - AERIAL	1	KMEM
DE-05-6000		TANK DESCRIPT, CONSTR AND MOUNT, UPF POLY IIE TANK	1	KMEM
JA-00-0100		BODY AND COMPARTMENT HEADER (ALL AERIAL DEVICES)	1	KMEM
JA-00-5030		GEN. 3/16" ALUM BODY DESCRIPT REAR MNT. PLATFORMS, HEAVY DUTY	1	KMEM
TF-04-1080		COMPARTMENTATION, -8" SHIFT STYLE #4H-LO	1	KMEM
		****** HEADER, HD-RM BODY OPTIONS (WITH PUMP)**	**1**	**KMEM**
TF-10-0100		BEVELED OVERLAPPING DOORS, ALL COMPARTMENTS, ALL DEVICES	1	KMEM
TF-10-1900		BRUSHED FINISHED DOOR PANS - 2" THICK DOORS	1	KMEM
TF-10-2700		DOOR HINGE FOR BEVELED OVERLAPPING HINGED DOORS	1	KMEM
TF-10-2800		DOOR SEAL FOR BEVELED OVERLAPPING HINGED DOORS	1	KMEM
TF-10-2940		ROTARY LATCHES WITH D-RING HANDLES	1	KMEM
TF-10-3150		GAS SHOCK ON HORIZONTALLY & VERTICALLY HINGED DOORS	1	KMEM
TF-10-6000		COMPARTMENT FLOORS (AERIALS ONLY)	1	KMEM
TF-11-0500		COMPARTMENT GENERAL DESCRIPTION, ALL LADDERS & PLATFORMS	1	KMEM
TF-11-1441		PAINTED REAR BODY PANEL, RM	1	KMEM
TF-11-2275		STAINLESS STEEL OUTRIGGER COVER PANEL, FOUR RIGGER DEVICES	1	KMEM
TF-11-3045		BODY RUB RAILS, C-CHANNEL	1	KMEM
TF-12-1000		RUNNING BOARD STEPS (AERIALS ONLY)	1	KMEM
TF-13-3005		REAR TURNTABLE ACCESS "A" FRAME LADDER FRAMEWORK -8 & -4	1	KMEM
TF-13-3105		REAR MOUNT, TURNTABLE A-FRAME LADDER STEPS (HD)	1	KMEM
TF-13-5000		REAR-MOUNTS, BODY HANDRAILS, EXTRUDED ALUMINUM, A-FRAME BODY	1	KMEM
TF-14-1000		ALUMINUM WHEEL WELL LINERS	1	KMEM
TF-14-1710		POLISHED ALUMINUM FENDERETTES, TANDEM AXLE BODIES	1	KMEM
TF-14-5000		REAR MUD FLAPS	1	KMEM
TF-14-6700		PAINTED REAR TOW EYES, BELOW BODY - REARMOUNT AERIALS	1	KMEM
TF-15-1050		HOSE BED, REAR MOUNT AERIALS, -4 & -8 SHIFT BODIES	1	KMEM
TF-15-1900		ALUMINUM HOSE BED FLOORING - AERIAL	1	KMEM
TF-15-2000	>	HOSE CHUTE, RIGHT SIDE TURNTABLE COMPARTMENTS	1	KMEM
TF-15-3110		HOSE BED COVER, VINYL WITH QTR TURNS	1	KMEM
TF-15-3190		HYPALON MATERIAL RED IN COLOR	1	KMEM
		****** HEADER, COMPARTMENT ACCESSORIES - REARMOUNTS**	**1**	**KMEM**
TJ-05-1000		ADJUSTABLE SHELF DESCRIPTION - REARMOUNT	1	KMEM
TJ-05-2000	>	(AUTO QTY) ADJUSTABLE SHELF(S), MOUNTED AS DIRECTED	4	KMEM
TJ-10-1000		250#, FLOOR MOUNTED, ROLLOUT TRAY DESCRIPTION - REARMOUNT	1	KMEM
TJ-10-1105	>	(AUTO QTY) ROLLOUT TRAY(S), MOUNTED AS DIRECTED	2	KMEM
TJ-55-1000		SWING OUT TOOL BOARD, PAC TRAC DOUBLE FACED EXTRUSION - REARMOUNT	1	KMEM
TJ-55-1200	>	(AUTO QTY) SWING OUT TOOL BOARD(S), MOUNTED AS DIRECTED	1	KMEM
	>	**"NOTE" READ THIS BEFORE ADDING ANY ADDITIONAL GROUND LADDERS**	**1**	**KMEM**
		****** HEADER, 102-RM-PL LO GROUND LADDERS**	**1**	**KMEM**
TN-00-5055	>	CENTER LADDER STORAGE, 102-RM-PL	1	KMEM
TN-00-7020		ROLL-UP DOOR - BRUSHED, LADDER COMPARTMENT, REAR MOUNT ONLY	1	KMEM
TN-01-0540		ALCO-LITE 115' LADDER COMP, 102-RM-PL	1	KMEM
TN-02-1150		ALCO-LITE PEL-35 35' 2-SECTION EXTENSION LADDER (ALUM)	1	KMEM

PART NO	S	DESCRIPTION	QTY	ID
TN-02-1170		ALCO-LITE PEL-24 24' 2-SECTION EXTENSION LADDER (ALUM)	1	KMEM
TN-02-2510		ALCO-LITE PRL-16 16' ROOF LADDER W/FOLDING HOOKS (ALUM)	2	KMEM
TN-02-7000		ALCO-LITE AEL-14 14' ATTIC EXTENSION LADDER (ALUM)	1	KMEM
TN-02-8010		ALCO-LITE FL-10 10' FOLDING ATTIC LADDER (ALUM)	1	KMEM
		****** HEADER, PIKE POLES & HOLDERS - AERIALS**	**1**	**KMEM**
TN-20-0000		ADDITIONAL ITEMS SHIPPED WITH VEHICLE, ALL AERIAL DEVICES	1	KMEM
		****** HEADER, LOOSE EQUIPMENT - AERIAL**	**1**	**KMEM**
TN-35-1015		TWO (2) ZICO #SAC-44 FOLDING WHEEL CHOCKS, (2) MTD DRIVER SIDE	1	KMEM
		****** HEADER, 102' PLATFORM, REAR MOUNT - NEW 2013**	**1**	**KMEM**
TQ-00-1120		102' PLATFORM, REAR MOUNT, GEN., INTENT & DESIGN STANDARDS - 13	1	KMEM
TQ-00-3000		MOUNTING OF AERIAL, REAR MOUNTS	1	KMEM
TQ-00-3340		HEIGHT AND REACH, 102' 3-SECT. RM PLATFORM - 13	1	KMEM
TQ-00-4000		MATERIAL STANDARDS, ALL DEVICES	1	KMEM
TQ-00-5035		102' PLATFORM, REAR MOUNT HYDRAULIC SYSTEM	1	KMEM
TQ-00-5120		PARKER HOSE KIT - 4 JACK UNIT REARMOUNT	1	KMEM
TQ-00-6120		HYDRAULIC PUMP - PRESSURE COMPENSATED	1	KMEM
TQ-00-7020		HYDRAULIC RESERVOIR - 40 GALLON	1	KMEM
TQ-00-7070		HYDRAULIC OIL - REGULAR - A/W 46 - 120 GAL	1	KMEM
TQ-00-7110		DIVERTER VALVE, REAR MOUNT DEVICES	1	KMEM
TQ-00-7220		OUTRIGGER HYDRAULIC CONTROL VALVE - RM, PROPORTIONAL	1	KMEM
TQ-00-7430		ELECTRIC TURNTABLE HYDRAULIC CONTROL VALVE, RM PLATFORM	1	KMEM
TQ-00-7505		HYDRAULIC SYSTEM FILTRATION	1	KMEM
TQ-00-8520		REARMOUNT PLATFORM, "IQAN" MOTION CONTROL SYSTEM - ELECTRIC CONTROLS @ TT	1	KMEM
TQ-00-8700		HYDRAULIC PUMP PRESSURE - DISPLAY	1	KMEM
TQ-00-8710		ELEVATION ANGLE OF LADDER - DISPLAY	1	KMEM
TQ-00-8715		VERTICAL HEIGHT OF LADDER - DISPLAY	1	KMEM
TQ-00-8725		DEGREE OF ROTATION FROM VEHICLE CENTERLINE - DISPLAY	1	KMEM
TQ-00-8735		E-ZONE SHORT JACK WARNING - DISPLAY	1	KMEM
TQ-00-8740		CRADLE ALIGNMENT MESSAGE - DISPLAY	1	KMEM
TQ-00-8750		DEVICE LOAD MONITORING - DISPLAY	1	KMEM
TQ-00-8760		E-SPEED LADDER TIP SPEED CONTROL - DISPLAY	1	KMEM
TQ-00-8765		E-CUSH RAMP CONTROL FOR ELEVATION - DISPLAY	1	KMEM
TQ-00-8770		E-CUSH RAMP CONTROL FOR EXTENSION & RETRACTION - DISPLAY	1	KMEM
TQ-00-8895		WARNING MESSAGES - TURNTABLE & PLATFORM	1	KMEM
TQ-00-9535		102' PLATFORM, REAR MOUNT, EMERG HYD. PUMP, EPU	1	KMEM
TQ-01-1000		HOT SHIFT PTO W/CONTROLS IN CAB	1	KMEM
TQ-01-1100		FAST IDLE CONTROL FOR ALL AERIAL DEVICES	1	KMEM
TQ-02-0115		102' PLATFORM, REAR MOUNT TORQUE BOX	1	KMEM
TQ-02-1115		102' PLATFORM, REAR MOUNT OUTRIGGERS	1	KMEM
TQ-02-1685		102' PLAT, REAR MOUNT OUTRIGGERS - HORIZONTAL CYLINDER	1	KMEM
TQ-02-1885		102' PLAT, REAR MOUNT OUTRIGGERS - VERTICAL CYLINDERS - EXTENDED STROKE	1	KMEM
TQ-02-2010		EXTENDED OUTRIGGER PENETRATION - 11 DEGREES	1	KMEM
TQ-02-2110		IQAN - OUTRIGGER STRING POTENTIOMETER - FOUR (4) OUTRIGGERS	1	KMEM
TQ-02-2200		OUTRIGGER/JACK FOOT PADS, FOUR (4) JACK DEVICES	1	KMEM
TQ-02-2350		AUXILARY JACK PADS, FOUR (4) 24" X 24" x 1" POLY	1	KMEM
TQ-02-2500		OUTRIGGER INTERLOCK SYSTEM & ALARM, ALL DEVICES	1	KMEM
		****** HEADER - OUTRIGGER LIGHTING, FOUR (4) OUTRIGGERS**	**1**	**KMEM**
TQ-02-5100		NO LOLLIPOP LIGHTS ON OUTRIGGER BEAMS	1	KMEM
TQ-02-5220		HALOGEN OUTRIGGER GROUND LIGHTS - RECTANGLE, 4-OUTRIGGERS	1	KMEM
TQ-02-5275		OUTRIGGER WARNING LIGHTS FROM LIGHT PACKAGE	1	KMEM
TQ-02-6005		OUTRIGGER WARNING LIGHT ACTIVATION, PRIMARY WARNING	1	KMEM
TQ-02-6800		OUTRIGGER SCOTCHLITE, WHITE	1	KMEM
TQ-02-7050		RM PLATFORM, BUTTON OUTRIGGER CONTROLS - FOUR JACKS	1	KMEM
TQ-02-9200		OUTRIGGER LEVEL SIDE TO SIDE, ALL REAR MOUNT DEVICES	1	KMEM
TQ-03-1070		102' PLATFORM, REAR MOUNT, TURNTABLE - 13	1	KMEM
TQ-03-3010		TURNTABLE DECK - ALUMINUM TREADPLATE	1	KMEM
TQ-04-1853		HEEL PIN STEP ON TURNTABLE,102' - 13	1	KMEM
TQ-04-1855		TURNTABLE HANDRAILS, KNURLED ALUMINUM, 3-SIDES	1	KMEM

PART NO	S	DESCRIPTION	QTY	ID
TQ-04-2125		HEEL PINS- 102' - 13	1	KMEM
TQ-04-2300		STAINLESS STEEL CRADLE ALIGNMENT ARROWS ON TURNTABLE	1	KMEM
TQ-04-2800		SAFETY CHAINS BETWEEN TURNTABLE HANDRAIL, REAR MOUNTS & TDA	1	KMEM
TQ-04-6100		102' PLATFORM, REAR MOUNT, 5" TURNTABLE SWIVEL	1	KMEM
TQ-04-9000		IQAN - SWIVEL ROTATION ENCODER	1	KMEM
TQ-06-0370		102' PLATFORM, REAR MOUNT, LADDER CONSTRUCTION - 13	1	KMEM
TQ-06-1570		102' PLATFORM RM, LADDER DIMENSIONS - 13	1	KMEM
TQ-06-3000		RUNG COVERS - PHOTOLUMINESCENT, ALL DEVICES	1	KMEM
TQ-06-9000		AERIAL TRAVEL SUPPORT, ALL DEVICES	1	KMEM
TQ-06-9020		CRADLE ILLUMINATION LIGHTS - HALOGEN LIGHTS	1	KMEM
TQ-07-1120		102' PLATFORM, REAR MOUNT, ELEVATION SYSTEM - 13	1	KMEM
TQ-07-2800		IQAN - INCLINOMETER	1	KMEM
TQ-07-2801		IQAN - MOMENT LOAD INDICATOR	1	KMEM
TQ-07-2815		IQAN - E-CUSH CONTROL, ELEVATION SYSTEM - PLATFORM & TURNTABLE	1	KMEM
TQ-07-3020		IQAN LOAD METER TURNTABLE & PLATFORM	1	KMEM
TQ-08-1120		102' PLATFORM, REAR MOUNT, ROTATION SYSTEM - 13	1	KMEM
TQ-08-2830		ROTATION MOTOR AND BRAKE - 50.625" EXTERNAL BEARINGS - 13	1	KMEM
TQ-08-2950		SWING DRIVE ADJUSTMENT	1	KMEM
TQ-08-3050		IQAN - "E-SPEED" SAFETY SYSTEM, PLATFORM & TURNTABLE	1	KMEM
TQ-08-3110		IQAN - "E-ZONE" ROTATION SAFETY SYSTEM, 4-OUTRIGGERS	1	KMEM
TQ-09-1120		102' PLATFORM, REAR MOUNT, EXTENSION/RETRACTION SYSTEM - 13	1	KMEM
TQ-09-2350		EXTENSION CYLINDERS PAINTED LADDER PAINT COLOR	1	KMEM
TQ-09-2800		IQAN - EXTENSION SYSTEM STRING POTENTIOMETER	1	KMEM
TQ-09-2815		IQAN - "E-CUSH" EXTENSION/RETRACTION SYSTEM - PLATFORM & TURNTABLE	1	KMEM
TQ-09-3010		LADDER SLIDE PADS, 102 PLATFORM - 13	1	KMEM
		LADDER EXTENSION NUMBERS, ALL DEVICES	**1**	**KMEM**
TQ-09-3150		LADDER LEVEL INDICATOR (BASE SECTION) - LIGHTED	1	KMEM
TQ-09-3310		PLATFORM, CABLE/HOSE/WIRE ROUTING, 3-SECTIONS - 13	1	KMEM
		****** 2010 - REAR MOUNT PLATFORM CONSTRUCTION - 13 - OPTIONS ******	**1**	**KMEM**
TQ-09-6070		PLATFORM STRUCTURE FINISH - PAINTED TO MATCH LADDER COLOR - 13	1	KMEM
TQ-09-6100		PLATFORM DOORS, HINGED @ REAR, LATCHED @ FRONT SELF CLOSE	1	KMEM
TQ-09-6205		PLATFORM, REAR ACCESS LADDER AND REAR GATE - 13	1	KMEM
TQ-09-7105		PLATFORM FLOOR - 13	1	KMEM
TQ-09-7205		PLATFORM MOUNT - 13	1	KMEM
TQ-09-7305		PLATFORM LEVELING SYSTEM - 13	1	KMEM
TQ-09-8000		PLATFORM BOTTOM HEAT SHIELDS, .09" TREAD PLATE	1	KMEM
TQ-09-8100		PLATFORM EXT. HEAT SHIELDS, .09" PAINTED ALUMINUM	1	KMEM
TQ-09-8205		PLATFORM SAFETY BELT LOOPS AND EXTERIOR LIFTING POINTS - 13	1	KMEM
TQ-09-8400		RESCUE LADDER BRACKETS - 13	1	KMEM
		****** HEADER - PLATFORM 120 VOLT ELECTRICAL SYSTEM & ACCESSORIES**	**1**	**KMEM**
TQ-11-3001		PLAT, 120 VOLT ELECTRICAL SYSTEM	1	KMEM
TQ-11-3050		DELETE TWO (2) RECEPTACLES FROM PLATFORM	1	KMEM
TQ-11-3490		NO 120V LIGHTS REQUIRED ON REAR OF PLATFORM	1	KMEM
TQ-11-5045		NO 120V LIGHTS REQUIRED ON FRONT OF PLATFORM	1	KMEM
TQ-11-5170		NO 120V LIGHTS REQUIRED ON BOTTOM OF PLATFORM	1	KMEM
TQ-11-5650		NO 120V LIGHTS REQUIRED ON SIDES OF PLATFORM	1	KMEM
		****** HEADER - RM PLATFORM, 12 VOLT ELECTRICAL SYSTEM & ACCESSORIES**	**1**	**KMEM**
TQ-11-6020		HEEL PIN STEP LIGHTS - TECNIQ EON 3 LED LIGHTS	1	KMEM
TQ-11-6059		TURNTABLE CONSOLE STEP LIGHT - TECNIQ EON 3 LED	1	KMEM
TQ-11-6075		PLATFORM CONSOLE STEP LIGHT - TECNIQ EON 3 LED LIGHT	1	KMEM
TQ-11-6080		TURNTABLE & PLATFORM CONTROL CONSOLE LIGHTING - LUMA BAR LED H2O	1	KMEM
TQ-11-6125		AMBER LED MARKER LIGHTS - PLATFORM	1	KMEM
TQ-11-6212		TWO (2) UNITY LED SPOTS @ LADDER BASE SECTION	1	KMEM
TQ-11-6310		ONE (1) UNITY SPOT & ONE (1) FLOOD @ PLATFORM	1	KMEM
TQ-11-6400		CUTOFF SWITCH FOR PLATFORM 12 VOLT LIGHTS @ TURNTABLE	1	KMEM
TQ-11-8072	>	RM PLATFORM WARNING LIGHTS, CODE 3 PRIZM II 4X6 SERIES LED	1	KMEM
TQ-12-1000		PLATFORM, CONTROL STATIONS	1	KMEM

PART NO	S	DESCRIPTION	QTY	ID
TQ-12-1060		RM PLATFORM, CONSOLE LOCATED @ LH SIDE OF TURNTABLE, STD	1	KMEM
TQ-12-1095		PAINTED ALUMINUM TURNTABLE CONSOLE - MATCH LADDER COLOR	1	KMEM
TQ-12-1200		102' PLATFORM, REAR MOUNT, TURNTABLE CONTROL STATION	1	KMEM
TQ-12-2520		FIRE RESEARCH INSIGHT FLOWMETER @ TURNTABLE CONSOLE	1	KMEM
TQ-12-2595		TURNTABLE CONSOLE COVER - PAINTED RADIUS	1	KMEM
TQ-12-6000		IQAN - MULIT-PLEX CONTROLLERS FOR PLATFORM	1	KMEM
TQ-12-6610		PLATFORM CONTROL STATION, RIGHT REAR OF PLATFORM	1	KMEM
TQ-12-6635		IQAN - MDM III DISPLAY @ PLATFORM CONTROL STATION	1	KMEM
TQ-12-6650		102' PLATFORM, REAR MOUNT, PLATFORM CONTROL STATION	1	KMEM
TQ-12-7100		PAINTED COVER FOR PLATFORM CONTROLLERS	1	KMEM
TQ-14-2200		PLATFORM, FIRE RESEARCH 2-WAY COMMUNICATION SYSTEM - LOWER CONTROL	1	KMEM
TQ-14-2205		PLATFORM, FIRE RESEARCH 2-WAY COMMUNICATION SYSTEM - UPPER SPEAKER/MIC	1	KMEM
TQ-15-0010		LADDER ANGLE INDICATOR (FLY SECTION) - LIGHTED	1	KMEM
TQ-16-1550	>	DELETE BREATHING AIR SYSTEM, ALL PLATFORM DEVICES	1	KMEM
TQ-18-0355		102' PLATFORM, REAR MOUNT, WATERWAY SYSTEM - 13	1	KMEM
TQ-18-1125		102' PLATFORM, REAR MOUNT, WATERWAY - 13	1	KMEM
TQ-18-2565		5" HEEL PIN SWIVEL - S-PIPES, -12 TO 80 DEGREES - 13	1	KMEM
TQ-18-2600		AUTOMATIC WATER DRAIN/VENT	1	KMEM
TQ-18-3000		ALL DEVICES, WATERWAY RELIEF VALVE	1	KMEM
TQ-18-3015		REAR MOUNT AERIAL WATERWAY DRAIN, 1 1/2" VALVE	1	KMEM
TQ-18-3150		4" NST REAR AERIAL WATERWAY INLET ADAPTER, REAR MOUNTS	1	KMEM
TQ-18-3200		4" NSTF x 4" STORZ KOCHEK SKE-R 30° ADAPTER FOR REAR INLET	1	KMEM
TQ-18-3800		INNOVATIVE CONTROLS 2 1/2" GAUGE FOR AERIAL INLET, REAR MOUNTS	1	KMEM
TQ-18-5020		102' RM PLATFORM, PLATFORM WATERWAY SYSTEM, SINGLE GUN	1	KMEM
TQ-18-5100		SHOWER NOZZLE UNDER PLATFORM (MANUAL)	1	KMEM
		PLATFORM MANUAL TFT VALVE UNDER MONITOR - SINGLE	**1**	**KMEM**
TQ-18-5215		2.5" NH GATED ELBOW LEFT HAND - C1 - VALVE UNDER MONITOR	1	KMEM
TQ-18-5255		BLIND PLUG - C2 - VALVE UNDER MONITOR	1	KMEM
TQ-18-5265		BLIND PLUG - C3 - VALVE UNDER MONITOR	1	KMEM
TQ-18-5275		2.5" NH GATED ELBOW RIGHT HAND - C4 - VALVE UNDER MONITOR	1	KMEM
TQ-18-6100	>	PLATFORM, SINGLE AKRON #3481 MONITOR	1	KMEM
TQ-18-6200		PLATFORM, AKRON #5160 NOZZLE	1	KMEM
TQ-20-1150		102' PLATFORM, REAR MOUNT, LADDER CAPACITIES - 13	1	KMEM
TQ-20-3100		102' PLATFORM, WATERWAY CAPACITIES - SINGLE GUN	1	KMEM
TQ-50-0100		FIRE DEPT AERIAL FAMILIARIZATION - PROVIDED BY FACTORY	1	KMEM
TQ-50-0140		FACTORY FAMILIARIZATION - FOUR (4) DAYS	1	KMEM
TQ-50-0600		AERIAL SERVICE, ALL DEVICES	1	KMEM
TQ-50-0700		WARNING DECALS, ALL DEVICES	1	KMEM
TQ-52-0100		AERIAL LADDER, MANUALS, TWO (2) SETS	1	KMEM
TQ-70-1105		102' PLATFORM, REAR MOUNT, CERTIFICATION & TESTING - 13	1	KMEM
		****** HEADER - PAINT SECTION - ALL UNITS ******	**1**	**KMEM**
UA-00-1100		GENERAL PAINT DESCRIPTION - ALL	1	KMEM
UA-00-1200		GENERAL PRIMER & PREP DESCRIPTION - LADDER/PLATFORM	1	KMEM
UA-00-1400		GENERAL FINISH PAINT DESCRIPTION - LADDER/PLATFORM	1	KMEM
UA-00-2700		BODY BUFFING & FINISH - LADDER/PLATFORM	1	KMEM
		****** HEADER - LADDER/PLATFORM BODY PAINT ******	**1**	**KMEM**
UA-03-0100		INSIDE/UNDERSIDE BODY PAINTED BLACK - LADDER/PLATFORM	1	KMEM
UA-03-0300		JOB COLOR COMPARTMENT INT W/SPATTER PAINT - LADDER/PLATFORM	1	KMEM
UA-03-0900		SINGLE COLOR BODY PAINT SCHEME - LADDER/PLATFORM	1	KMEM
UA-03-2200		PUMPHOUSE & PLUMBING PAINTED JOB COLOR - LADDER/PLATFORM	1	KMEM
		****** HEADER - TANDEM AXLE CUSTOM CHASSIS PAINT (AERIAL)**	**1**	**KMEM**
UA-05-0050		CUSTOM CAB PRIMER & PREP	1	KMEM
UA-05-0070		CUSTOM FINISH PAINT & PREP	1	KMEM
UA-05-0100		SINGLE COLOR CUSTOM CAB PAINT SCHEME	1	KMEM
UA-05-0350		CUSTOM CAB BUFFING & FINISH	1	KMEM
UA-05-0365		CUSTOM CAB INTERIOR PAINT - JOB COLOR	1	KMEM
UA-05-0400		CUSTOM CHASSIS GLOSS BLACK COLOR FRAME RAILS	1	KMEM
UA-05-0505		CUSTOM CHASSIS WHEEL AND HUB PAINT - TANDEM AXLE	1	KMEM

PART NO	S	DESCRIPTION	QTY	ID
UA-06-0200		LADDER, PAINTING, ALL DEVICES, WHITE #91528	1	KMEM
UA-06-0450		EXTENSION CYLINDERS PAINTED TO MATCH LADDER COLOR	1	KMEM
UA-06-0905		TORQUEBOX PAINT - BLACK	1	KMEM
UA-06-1100		OUTRIGER PAINT - SILVER URETHABOND 104	1	KMEM
UA-06-1205		TURNTABLE PAINT - LADDER COLOR	1	KMEM
UA-06-1215		TURNTABLE CONSOLE PAINT - LADDER COLOR	1	KMEM
UA-06-1225		LIFT CYLINDERS CONSOLE PAINT - LADDER COLOR	1	KMEM
UA-06-1500		LADDER RUST INHIBITOR - ALL DEVICES	1	KMEM
UA-06-2110	>	PAINT CODE, SINGLE COLOR, FILL IN BLANKS	1	KMEM
UA-06-2130		PAINT CODES, AERIAL DEVICE - WHITE #91528	1	KMEM
UA-06-2200		PINT OF TOUCH-UP PAINT	1	KMEM
UA-06-2510		FINALIZATION & DETAILING - LADDER/PLATFORM	1	KMEM
UA-06-2850		RUSTPROOFING WARRANTY, TEN (10) YEAR	1	KMEM
		****** HEADER, LETTERING & STRIPING - 102-RM-PL**	**1**	**KMEM**
UA-12-0100		COMPUTER GENERATED LETTERING	1	KMEM
UA-12-1220		GOLDLEAF W/ DUAL DROP SHADOW LETTERING ON FRONT CAB DOORS	1	KMEM
UA-12-1245		3" LETTERING ON FRONT CAB DOORS	1	KMEM
UA-12-1760		GOLDLEAF W/ DUAL DROP SHADOW LETTERING ON CREW CAB DOORS	1	KMEM
UA-12-1785		3" LETTERING ON CREW CAB DOORS	1	KMEM
UA-12-2720		GOLDLEAF W/ DUAL DROP SHADOW LETTERING ON FRONT OF CAB	1	KMEM
UA-12-2745		3" LETTERING ON FRONT OF CAB	1	KMEM
UA-12-3120		GOLDLEAF W/ DUAL DROP SHADOW LETTERING ON CAB SIDE PANEL	1	KMEM
UA-12-3145		3" LETTERING ON CAB SIDE PANEL	1	KMEM
UA-12-3720		GOLDLEAF W/ DUAL DROP SHADOW LETTERING ON REAR BODY PANEL	1	KMEM
UA-12-3745		3" LETTERING ON REAR BODY	1	KMEM
UA-13-0100		LETTERING FONT - BASIC BLOCK TYPE FONT	1	KMEM
UA-50-0200		NFPA REQUIRED SCOTCH-LITE STRIPINGSTRIPING - TA AERIAL	1	KMEM
UA-50-0210		4" SCOTCH-LITE STRIPE ON CAB AND BODY - TA AERIAL	1	KMEM
UA-58-5100		WHITE SCOTCH-LITE	1	KMEM
UA-80-6000		REAR CHEVRON STRIPING	1	KMEM
UA-80-6002		50% VERTICAL SURFACE	1	KMEM
UA-80-6050		6" 50% REAR SCOTCH-LITE DIAMOND GRADE CHEVRON STRIPING	1	KMEM
UA-80-6075		RED & FLUORESCENT YELLOW GREEN DIAMOND GRADE SCOTCH-LITE	1	KMEM
		****** PROPOSED - AERIAL WARRANTY PKG, W/PUMP @ REAR OF SPEC**	**1**	**KMEM**
W6-00-000J		PROPOSED - KME WARRANTY, STARTING ON DELIVERY DATE	1	KMEM
W6-00-0010	**X** <	PROPOSED - 5 YEAR FCAM WARRANTY - CUSTOM CHASSIS	1	
		$19,500 per email Phil to Byron 9-27-16		
W6-00-003M	>	PROPOSED - 5 YEAR WARRANTY - BASE WITH CUSTOM CHASSIS	1	KMEM
W6-00-0163		PROPOSED - 10 YEAR CUMMINS ISX - EXTENDED WARRANTY	1	KMEM
W6-00-0210		PROPOSED - 5 YEAR ALLISON EVS TRANSMISSION WARRANTY	1	KMEM
W6-00-0230		PROPOSED - LIFETIME FRAMERAIL WARRANTY	1	KMEM
W6-00-0242		PROPOSED - SHEPPARD STEERING GEAR STANDARD - THREE YEAR WARRANTY	1	KMEM
W6-00-0254		PROPOSED - 5 YEAR MERITOR FRONT AXLE - WARRANTY	1	KMEM
W6-00-0266		PROPOSED - 5 YEAR MERITOR 180 SERIES TANDEM AXLE REAR - WARRANTY	1	KMEM
W6-00-0320	>	PROPOSED - 10 YEAR CAB STRUCTURAL WARRANTY	1	KMEM
W6-00-0330		PROPOSED - 10 YEAR BODY STRUCTURAL WARRANTY	1	KMEM
W6-00-0390		PROPOSED - 10 YEAR CAB & BODY CORROSION WARRANTY	1	KMEM
W6-00-0450		PROPOSED - PAINT FINISH WARRANTY, TEN (10) YEAR	1	KMEM
W6-00-0470		PROPOSED - 5 YEAR LETTERING WARRANTY	1	KMEM
W6-00-0483		PROPOSED - 1 YEAR BRIGHTWORK WARRANTY	1	KMEM
W6-00-0490		PROPOSED - 10 YEAR STAINLESS STEEL PIPING WARRANTY	1	KMEM
W6-00-0550		PROPOSED - REAR SUSPENSION - RIDEWELL - AIR RIDE - 3 YEAR WARRANTY	1	KMEM
W6-00-0570		PROPOSED - SAFEGUARD TECHNOLOGY - 10 YEAR - RUNG COVERS	1	KMEM
W6-00-0610		PROPOSED - 20 YEAR AERIAL PLATFORM WARRANTY	1	KMEM
W6-00-0650	>	PROPOSED - TEN 10 YEAR AERIAL WATERWAY WARRANTY - AMITY	1	KMEM
W6-00-0655	>	PROPOSED - TEN 10 YEAR AERIAL WATERWAY WARRANTY	1	KMEM

PART NO	S	DESCRIPTION	QTY	ID
W6-00-0710		PROPOSED - LIFETIME POLY TANK WARRANTY - ALL TANKS	1	KMEM
W6-00-0820		PROPOSED - WATEROUS 5 YEAR PUMP WARRANTY (PARTS & LABOR)	1	KMEM
W6-00-0823	**X**	WATEROUS FCAM 5 YR WARRANTY CORRECTION	1	
W6-00-1153	**S**	DEALER PROVIDES WARRANTY TRANSPORT PROP and REQ	1	DLR
W6-00-1330		PROPOSED - AKRON - 5 YEAR LIMITED WARRANTY	1	KMEM
W6-00-1340		PROPOSED - AKRON HEAVY DUTY VALVE - 10 YEAR WARRANTY	1	KMEM
W6-00-1530		PROPOSED - USSC SEATING 6 YEAR WARRANTY	1	KMEM
WA-00-0010		"AERIAL FIRE APPARATUS" NFPA 2016 STATEMENT OF EXCEPTIONS	1	KMEM

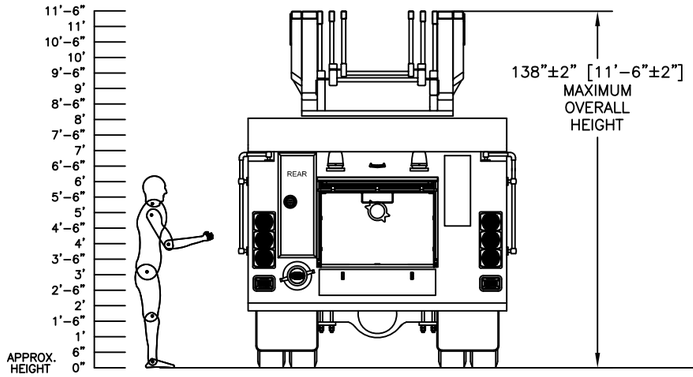

REAR VIEW

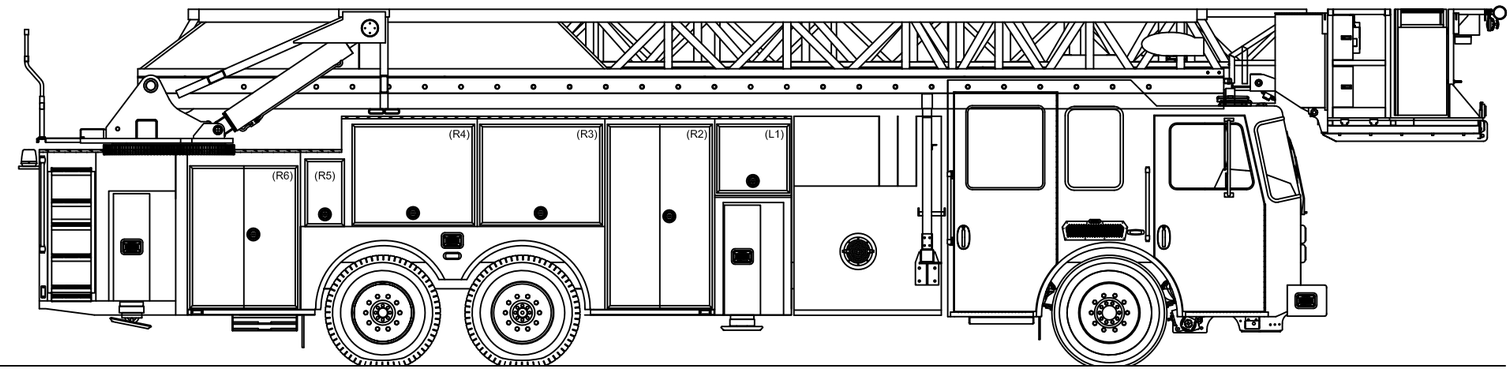

OFFICERS SIDE VIEW

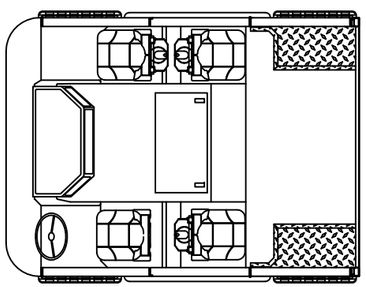

CAB INTERIOR LAYOUT

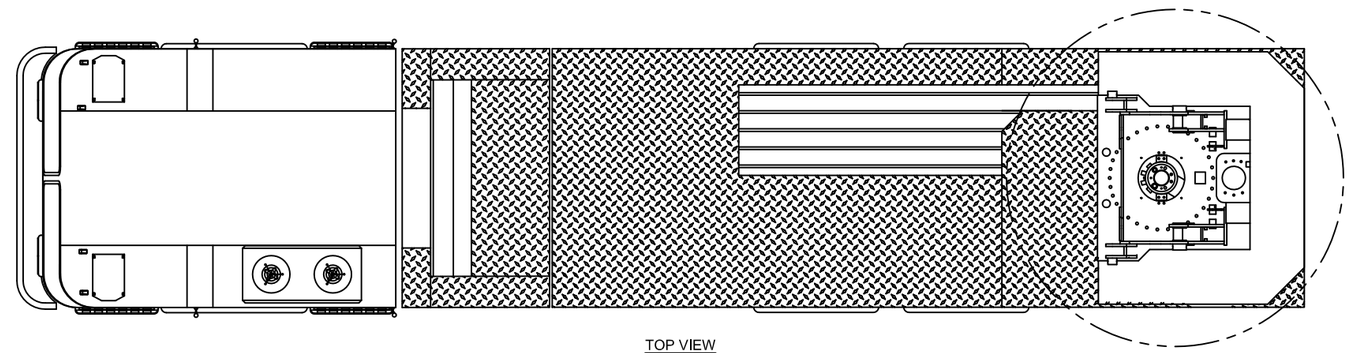

TOP VIEW

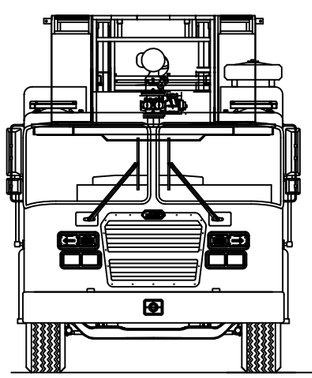

FRONT VIEW

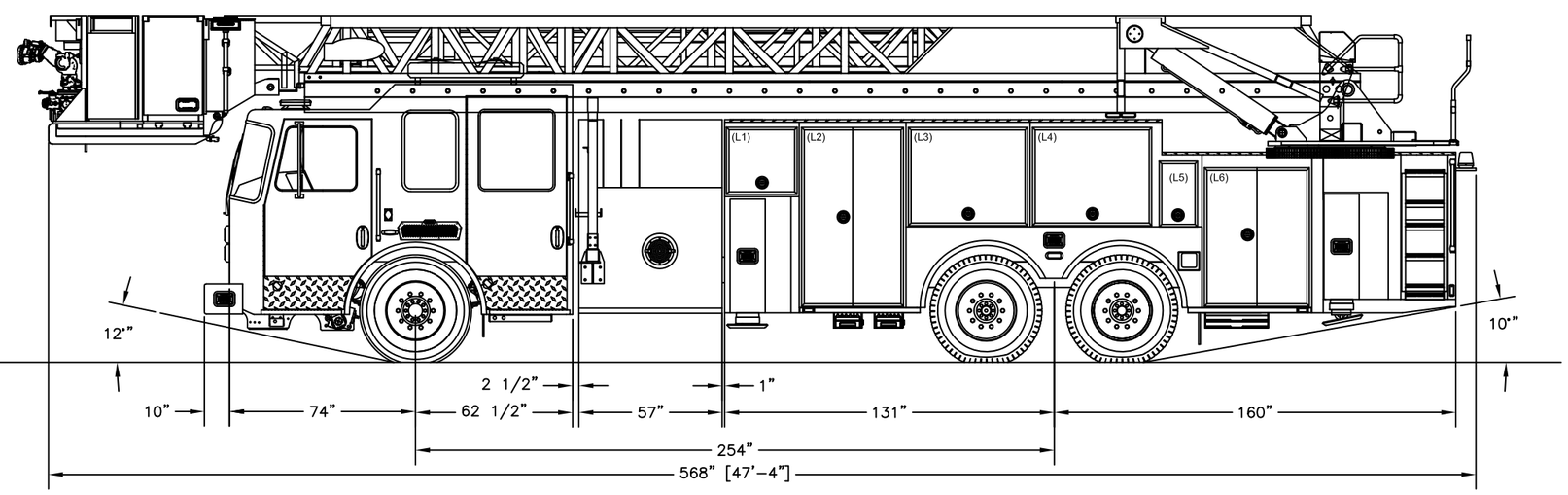

DRIVERS SIDE VIEW

CAB: 100"W PREDATOR MFD 10" RAISED ROOF
ENGINE & TRANS. CUMMINS ISX12 450 HP/ 4000 EVS
AXLES: 23,000# FRONT/60,000# REAR
PUMP: WATEROUS CSU-C20 1,500 GPM SINGLE STAGE
WATER TANK: 300 GALLONS
SMART POWER ER 6KW

THIS DRAWING IS A GENERAL CONFIGURATION AND MAY NOT NECESSARILY REFLECT ALL CONTRACTUAL REQUIREMENTS. CONTRACT SPECIFICATIONS SHALL PREVAIL OVER DRAWING.

CUSTOMER APPROVAL:

NAME:

TITLE:

DATE:

SYM	DATE	REVISION DESCRIPTION	APP'D
A			

SALES ENGINEER : TBD

DIMENSIONS ARE APPROXIMATE & MAY VARY DUE TO BUILD ADJUSTMENTS

SCALE	DWG SIZE	DRAWN BY	Z.ZSCHUNKE	DATE
NONE	B	APPROVED BY	P.HOHERCHAK	9-29-16

102' REARMOUNT PLATFORM

MAPC 5 BASIC

PROPOSAL DRAWING

KME
ONE INDUSTRIAL COMPLEX - NESQUEHONING, PA 18240

KME

FCAM BASIC 100 FOOT

MIDMOUNT AERIAL PLATFORM

“QUINT”

MAPC 6

Quote SO

MAPC/FCAM

MAPC 6 BASIC 100' MID MOUNT PLATFORM

Sales Rep:

Terms:

Drawing #:
Est. Delivery Date: / /
Customer PO #:
Penalty:
Customer #:
QPF #:

Quote No: 10508-0013
10/04/2016

PART NO	S	DESCRIPTION	QTY	ID
		== MID MOUNT PLATFORM - 713.016 07/13/16 ==	**1**	**KMEM**
		== LETTERING & STRIPING, 100' 5-SECTION MM - 713.016 07/13/16 ==	**1**	**KMEM**
		== COMPARTMENT ACCESSORIES MIDMOUNT AERIAL - 713.016 07/13/16 ==	**1**	**KMEM**
		== MISC AND LOOSE EQUIPMENT (AERIAL) - 713.016 07/13/16 ==	**1**	**KMEM**
		== AERIAL WARRANTY PACKAGE W/PUMP - 713.016 07/13/16 ==	**1**	**KMEM**
		DEALER ======= DEALER ======= DEALER	**1**	**DLR**
		QUOTE DATA VERSION: 0713.016 - 2016 DATA SET	**1**	**KMEM**
		INDEX OF PART NUMBERS	**1**	**KMEM**
		****** HEADER - CONTRACTS, PROPOSAL FORM, ETC @ FRONT OF SPECS**	**1**	**KMEM**
		****** PROPOSED - AERIAL SPEC BOILERPLATE**	**1**	**KMEM**
04-00-0000		PROPOSED - GENERAL INFORMATION - NFPA 1901	1	KMEM
04-00-0033		PROPOSED - COMPLETION INFO	1	KMEM
04-00-0040		PROPOSED - FMVSS CERTIFICATION	1	KMEM
04-00-0060		PROPOSED - RECORDS	1	KMEM
04-00-0075		PROPOSED - TOP OF THE LINE CHASSIS MULTIPLEX	1	KMEM
04-00-0107		PROPOSED - GENERAL CONSTRUCTION - AERIAL	1	KMEM
04-00-0120		PROPOSED - SINGLE LINE RESPONSIBILITY	1	KMEM
04-00-0130		PROPOSED - PRODUCT LIABILITY - $30,000,000.00	1	KMEM
04-00-0170		PROPOSED - CRITERIA & CODE CONFORMANCE - AERIAL	1	KMEM
04-00-0193		PROPOSED - PAINT PERFORMANCE CERTIFICATION	1	KMEM
04-00-0490		PROPOSED - PRICES & PAYMENTS	1	KMEM
04-00-0540		PROPOSED - BOND REQUIREMENTS	1	KMEM
04-00-0560		PROPOSED - PERFORMANCE BOND	1	KMEM
04-00-0580		PROPOSED - NON-COLLUSION AGREEMENT	1	KMEM
04-00-0630		PROPOSED - MATERIAL & WORKMANSHIP	1	KMEM
04-00-0660		PROPOSED - CONTRACT SPECIALIST	1	KMEM
04-00-0680		PROPOSED - APPROVAL DRAWING	1	KMEM
04-00-1200		PROPOSED - DELIVERY	1	KMEM
04-00-1215		PROPOSED - INSTRUCTION MANUALS, TWO (2) SETS - CD	1	KMEM
04-00-1215	**X**	POWERPOINT DELIVERY - PROPOSAL FCAM AERIAL	1	
04-00-1300		PROPOSED - VEHICLE FLUIDS PLATE	1	KMEM
04-00-1500		PROPOSED - MANUFACTURE GENERATED EXACT BLUEPRINT WITH BID	1	KMEM

PART NO	S	DESCRIPTION	QTY	ID
04-00-1521	X	PROPOSED - KME and BULLDOG FAMA MEMBERSHIP	1	
04-00-1540		PROPOSED - MANUFACTURED IN THE UNITED STATES	1	KMEM
04-00-1550		PROPOSED - ISO 9001 QUALITY MANAGEMENT SYSTEM	1	KMEM
04-00-1570		PROPOSED - NFPA TREAD PLATE CERTIFICATION	1	KMEM
04-00-1700		PROPOSED - COOPERATIVE PURCHASING	1	KMEM
04-00-2440		PROPOSED - UNDERWRITERS LABORATORIES (UL) TESTING - AERIAL	1	KMEM
07-00-0015		"AERIAL FIRE APPARATUS" NFPA 2016 CHAPTERS OF COMPLIANCE	1	KMEM
08-00-0000		VEHICLE DATA PLATE DESCRIPTION	1	KMEM
14-00-0000		NFPA ROLLOVER STABILITY GENERAL STATEMENT	1	KMEM
15-00-0010	>	PROPOSED - PRINCIPAL APPARATUS DIMENSIONS & GVWR	1	KMEM
15-00-0050		!!! CRITICAL OVERALL HEIGHT REQUIREMENT !!! - "NO"	1	KMEM
15-00-0150		!!! CRITICAL OVERALL LENGTH REQUIREMENT !!! - "NO"	1	KMEM
AA-00-002A		SERVICE CENTER - PROPOSAL FCAM	1	DLR
BA-00-0325		MM PLATFORMS	1	KMEM
BA-00-3000		SEAT AND SEAT BELT ANCHOR TESTING	1	KMEM
BA-01-1410		<1> 100'-5-MM-PL WITH PUMP	1	KMEM
BA-01-3800		<2> TRAVEL HEIGHT 119", 100-5-MM-PL LOW BODY (WITH PUMP)	1	KMEM
BA-02-0715		<3> MM-PL PREDATOR -TANDEM AXLE	1	KMEM
BA-04-0195		AERIAL CHASSIS, MID-MOUNT PLATFORM -TANDEM AXLE (HEAVY)	1	KMEM
		****** HEADER - 100" PREDATOR CAB ******	**1**	**KMEM**
BA-04-0805		PREDATOR CAB - BASE, 100"	1	KMEM
BA-04-0850		PREDATOR CAB - BASE - ALUMINUM CONSTRUCTION	1	KMEM
BA-04-0990		PREDATOR 100" - CRASH TESTING	1	KMEM
BA-04-0995		PREDATOR 100" - 120,000# ROOF & SIDE TESTING	1	KMEM
BA-04-1300		PREDATOR 100" - MFD CAB LENGTH (DIM - 62 1/2")	1	KMEM
BA-04-1900		PREDATOR 100" - VISTA DIMENSIONS FRONT SEATING & ENGINE ENCLOSURE	1	KMEM
BA-04-4000		10" RAISED ROOF - 100" PREDATOR	1	KMEM
BA-04-5000		CAB ROOF DRIP RAIL 100" PREDATOR/PANTHER	1	KMEM
BA-05-0260		BATTERY ACCESS DOORS - REAR STEP WELLS, EACH SIDE	1	KMEM
BA-05-0610		BARRIER HEIGHT CAB DOORS, 100" PREDATOR "MFD, LFD & X-LFD"	1	KMEM
BA-05-0650		CAST ANTI-SLIP ENTRY STEPS FOR REDUCED LENGTH CAB DOORS	1	KMEM
BA-05-0700		CAB DOORS - BOLT ON WEATHER STRIP	1	KMEM
BA-05-1015		PREDATOR DOOR LATCHES, HD LOOP STYLE LATCH - BARRIER HEIGHT DOORS	1	KMEM
BA-05-1035		LOCKING CAB DOOR , OUT + IN, LOOP STYLE LATCH	1	KMEM
BA-05-1037		KEY MODEL #2001	1	KMEM
BA-05-1103		WINDOWS, MANUAL HAND CRANK STYLE - 100"	1	KMEM
BA-05-1130		DOOR WINDOW TRIM EXTRUSION, 4 - DOOR	1	KMEM
BA-05-1310		UPPER INTERIOR DOOR PANELS - ABS, 4-DOOR	1	KMEM
BA-05-1410		BRUSHED ALUMINUM DOOR SCUFF PLATES, 4 - DOOR	1	KMEM
BA-05-1510		SCOTCHLITE MATERIAL ON INTERIOR OF DOOR PANEL 4-DOORS	1	KMEM
		****** HEADER - CAB EXTERIOR ACCESSORIES & OPT, 100" PREDATOR**	**1**	**KMEM**
BA-05-2410		WINDSHIELD, 100" PREDATOR CAB	1	KMEM
BA-05-2425		WINDSHIELD WIPERS & WASHERS - 100" PREDATOR	1	KMEM
BA-05-2450		SIDE VIEWING WINDOWS NON-SLIDING - PREDATOR	1	KMEM
BA-05-2500		DARK TINT WINDOWS, SIDE VIEWING, REAR DOORS & REAR WALL	1	KMEM
BA-05-2600		GRAB RAILS EXTERIOR, KNURLED ALUMINUM EXTRUSION	1	KMEM
BA-05-2668		PREDATOR INTERIOR GRAB HANDLES - WHEELABRATED	1	KMEM
BA-05-2692		INTERIOR "A" POST GRAB HANDLE "PREDATOR" - WHEELABRATED	1	KMEM
BA-05-2715		FRONT CAB GRILLE - FORMED STAINESS STEEL MIRROR FINISHED - 100" PREDATOR	1	KMEM
BA-05-2780		FRONT CAB GRILLE SCREEN - BLACK MESH - 100" PREDATOR/PANTHER	1	KMEM
BA-05-2815		SIDE CAB GRILLES - SHAPED BRIGHT FINISHED - 100" PREDATOR	1	KMEM
BA-05-2880		SIDE CAB GRILLE SCREEN - BLACK MESH - PREDATOR/PANTHER	1	KMEM
BA-05-2900		ALUMINUM CAB WHEEL LINERS	1	KMEM
BA-05-2910		ALUMINUM CAB FENDERETTES	1	KMEM
BA-05-3000		FRONT MUD FLAPS	1	KMEM
BA-05-3500		VELVAC MIRRORS " WEST COAST" HEATED / REMOTE - W/CONVEX SPOT	1	KMEM
BA-05-3690		MIRROR CONTROL IN MULTIPLEX CONTROL SCREEN	1	KMEM

PART NO	S	DESCRIPTION	QTY	ID
BA-05-5115		INTERIOR TRIM, 100" PREDATOR	1	KMEM
BA-05-5185		CUSTOM CAB INTERIOR PAINT - JOB COLOR	1	KMEM
BA-05-5200		PREDATOR REAR INTERIOR CAB WALL, GRAY DURAWEAR UPHOLSTERY	1	KMEM
BA-05-5335		TREAD PLATE KICK PLATE ON LOWER INTERIOR REAR WALL	1	KMEM
BA-05-5530	>	STORAGE COMPARTMENTS UNDER FRONT SEATS - 100" PREDATOR	1	KMEM
BA-05-5610		BARYFOL FLOORING	1	KMEM
BA-05-5650		1" ACOUSTICAL INSULATION	1	KMEM
BA-05-5824		ENGINE ENCLOSURE 100" PREDATOR FAB DASH (DURAWEAR)	1	KMEM
BA-05-5860		ENGINE ENCLOSURE MATERIAL - ALUMINUM CAB	1	KMEM
BA-05-7040		SUN VISORS, 100" PREDATOR CAB, PADDED VINYL	1	KMEM
BA-06-0400	>	DELETED - TOP ROLLOVER PROTECTION SYSTEM	1	KMEM
		****** HEADER - CAB SEATING & ACCESSORIES, 100" - PREDATOR MFD**	**1**	**KMEM**
		****** SEATING OPTIONS USSC, 100" - PREDATOR - MFD - NON ROLLTEK**	**1**	**KMEM**
BA-06-329H		DRIVERS SEAT, USSC AIR SUSPENSION, ABTS	1	KMEM
BA-06-389K		OFFICERS SEAT, USSC - FIXED BASE, SCBA, ABTS	1	KMEM
BA-06-3910		ZICO ULLH SCBA BOTTLE BRACKET - OFFICER'S SEAT	1	KMEM
		MFD CAB - REAR FACING USSC SEATS - NON ROLLTEK	**1**	**KMEM**
BA-06-414H		USSC SCBA ABTS REAR FACING, OUTBOARD, DS	1	KMEM
BA-06-4180		ZICO ULLH SCBA BOTTLE BRACKET - OUTBOARD, DS	1	KMEM
BA-06-424H		USSC SCBA ABTS REAR FACING, OUTBOARD, OS	1	KMEM
BA-06-4280		ZICO ULLH SCBA BOTTLE BRACKET - OUTBOARD, OS	1	KMEM
		MFD CAB - FORWARD FACING USSC SEATS - NON ROLLTEK	**1**	**KMEM**
BA-06-7200		**** DELETE FORWARD FACING SEAT RISER - NOT REQUIRED	1	KMEM
BA-06-8055		NO SCBA PARADE COVERS SUPPLIED	1	KMEM
BA-06-8150		USSC SEATING MATERIAL - BLACK CORDURA	1	KMEM
		****** HEADER - VEHICLE DATA RECORDER SYSTEMS**	**1**	**KMEM**
BA-06-9103	>	CLASS ONE SEAT BELT WARNING SYSTEM - UP TO 6 POSITIONS - ULTRAVIEW DISP	1	KMEM
BA-06-9115		FOUR (4) SEATING POSITIONS	1	KMEM
BA-06-9250	>	HELMET HOLDERS - IN CAB - ZICO	4	KMEM
BA-06-9310		CLASS ONE VEHICLE DATA RECORDER - MULTIPLEX	1	KMEM
		****** HEADER - CAB INTERIOR ACCESSORIES & OPTIONS, 100" PREDATOR**	**1**	**KMEM**
BA-07-7010	>	STANDARD #MATM RADIO ANTENNA INSTALLED	1	KMEM
		****** HEADER - INSTRUMENTATION & CONTROLS, 100" PREDATOR - NARROW VISTA**	**1**	**KMEM**
BA-08-0214		DASH & CENTER CONSOLE - 100" PREDATOR FAB DASH (UPHOLSTERED)	1	KMEM
BA-08-0275		INSTRUMENT PANEL, 100" PREDATOR - NARROW	1	KMEM
BA-08-0300		INTER AXLE LOCK CONTROL SWITCH	1	KMEM
BA-08-0315		DIESEL EXHAUST FLUID LEVEL GAUGE	1	KMEM
BA-08-0320		ENGINE COMPRESSION BRAKE CONTROLS	1	KMEM
BA-08-0620		ULTRAVIEW 450 DISPLAY ON CAB DASH FOR ES-KEY SYSTEM	1	KMEM
BA-08-1220		INDICATOR CLUSTER, 100" PREDATOR	1	KMEM
BA-08-1225		"INTER AXLE LOCK" INDICATOR CLUSTER	1	KMEM
BA-08-1235		"ATC DISABLED" INDICATOR CLUSTER	1	KMEM
BA-08-1240		"ATC ACTIVE" INDICATOR CLUSTER	1	KMEM
BA-08-1265		"OUTRIGGERS NOT STOWED" INDICATOR ON DASH	1	KMEM
BA-08-1800		LOWER RIGHT AUXILIARY SWITCH PANEL - PREDATOR - FAB	1	KMEM
BA-08-1900		PUMP SHIFT CONTROL ON LOWER LEFT DASH PANEL	1	KMEM
BA-08-1950		MULTIPLEX CONTROL PUMP SHIFT SWITCH - MULTIPLEX	1	KMEM
BA-08-2000		AERIAL LADDER, LADDER POWER/PTO SWITCHES IN CAB	1	KMEM
BA-08-2750		PREDATOR COMPUTER TERMINAL IN FRONT OF OFFICER (FABRICATED)	1	KMEM
BA-08-2905		OVERHEAD ABS PANEL, FLAT FACED, 100" PREDATOR	1	KMEM
BA-08-3105		HEATER/DEFROSTER & ACCESS, PREDATOR 100" - 10" RAISED ROOF	1	KMEM
BA-08-6900		HVAC CONTROL SYSTEM - INCOPORATED INTO MULTIPLEX CONTROL DISPLAY	1	KMEM
BA-08-9000		CAB TILT SYSTEM & OPTIONS	1	KMEM
BA-08-9110		PARKING BRAKE/CAB TILT INTERLOCK	1	KMEM
		FRAME & AXLE PACKAGE, MID-MOUNT TANDEM AXLE CHASSIS	**1**	**KMEM**
BA-09-5500		110,000 PSI FRAME: MID-MOUNT AERIAL CHASSIS, SPECIAL FRAME	1	KMEM
		HEADER - FRONT BUMPER, EXTENSIONS & ACCESSORIES	**1**	**KMEM**

PART NO	S	DESCRIPTION	QTY	ID
BA-10-0057	>	BUMPER 12" PAINTED 3/8" STEEL BUMPER - ALL CABS	1	KMEM
BA-10-0110		10" FRONT BUMPER EXTENSION WITH TREAD PLATE GRAVEL SHIELD	1	KMEM
BA-10-0405		TREADPLATE GRAVEL SHIELD STANDARD INSTALLATION	1	KMEM
BA-10-2010		TWO (2) PAINTED TOW HOOKS BELOW FRONT BUMPER	1	KMEM
BA-14-0170		23,000# FRONT AXLE MERITOR MFS-20-133A-N	1	KMEM
BA-14-1110		MERITOR, EX-225 17" DISC BRAKES, FRONT AXLE, W/ AUTO SLACK ADJUSTMENT	1	KMEM
BA-14-2040		SUSPENSION FRONT - 23,000# AXLES	1	KMEM
BA-14-2110		FRONT AXLE SHOCK ABSORBERS - MONROE "MAGNUM - 70"	1	KMEM
BA-15-1060		58,000# TANDEM REAR AXLE MERITOR RT-58-185	1	KMEM
BA-15-1505		16.5" X 8.6" S-CAM BRAKES - MERITOR REAR TANDEM W/ AUTO SLACK ADJ.	1	KMEM
BA-15-2810		VEHICLE TOP SPEED - 2016 NFPA STATEMENT	1	KMEM
BA-15-4640	>	RIDEWELL "DYNALASTIC" 202S RUBBER BLOCK SUSPENSION, TANDEM AXLE 58,000#	1	KMEM
		****** HEADER - BRAKE SYSTEM, TANDEM AXLE VEHICLE**	**1**	**KMEM**
BA-20-1005		BRAKE SYSTEM, TA CHASSIS	1	KMEM
BA-20-1110		ABS BRAKING FOR TANDEM REAR AXLE CHASSIS	1	KMEM
BA-20-1275	>	ELECTRONIC STABILITY CONTROL (ESC) WITH (ATC) - CUSTOM TA	1	KMEM
BA-20-1530		AIR RESERVOIRS 7100 CU IN TA, BASE	1	KMEM
BA-20-2025		1/4 TURN DRAIN VALVES ON ALL AIR TANKS	1	KMEM
BA-20-3000		AIR DRYER, HEATED - BENDIX AD-9 12VOLT	1	KMEM
BA-20-5005		COLOR CODED SYNFLEX BRAKE LINES W/QUICK RELEASE FITTINGS - TA	1	KMEM
BA-20-5500		AIR COMPRESSOR -WABCO 18.7 CFM- STD. FOR ALL CUMMINS ENGINES	1	KMEM
BA-20-5810		BRAKE TREADLE VALVE	1	KMEM
BA-20-6010		PARKING BRAKE CONTROL - NEAR DRIVER - ALL WHEEL LOCK	1	KMEM
		HEADER, TIRE AND WHEEL OPTIONS	**1**	**KMEM**
		HEADER, WHEELS, 23,000 FRONT AXLE - ALUMINUM	**1**	**KMEM**
BA-25-1010		FRONT WHEELS, MILL ALUMINUM DISC TYPE - PAINTED 22.5 X 13, 24,390#	1	KMEM
BA-25-1020		FRONT WHEELS, LUG AND HUB TRIM (MILL ALUM WHEELS)	1	KMEM
BA-25-2030	>	FRONT, GOODYEAR 425/65R22.5 L 24,400# G296 MSA MIXED - 68MPH	1	KMEM
BA-25-2400		GOODYEAR - FIRE SERVICE RATING - TIRE RESTRICTIONS	1	KMEM
		HEADER, TIRES & WHEELS, 58,000 TANDEM REAR AXLE	**1**	**KMEM**
BA-25-5015	>	REAR WHEELS, STEEL DISC TYPE, 22.5 X 9, TA	1	KMEM
BA-25-5040		REAR WHEELS, LUG AND HUB TRIM, TA (STEEL)	1	KMEM
BA-25-7055	>	REAR, GDYR 315/80R22.5 J 64,000# RHD II+ TRACTION - 75MPH, TA	1	KMEM
BA-25-7400		GOODYEAR - FIRE SERVICE RATING - TIRE RESTRICTIONS	1	KMEM
BA-25-9905		TIRE PRESSURE MONITORING - LED VALVE STEM CAPS - TEN TIRES	1	KMEM
		100" PREDATOR - ENGINE PACKAGE, MID-MOUNT TANDEM AXLE CHASSIS	**1**	**KMEM**
		****** 100" - HEADER, ENGINE & ENGINE COMPONENTS**	**1**	**KMEM**
BA-30-3185	>	CUMMINS ISX12 - 400 HP @ 1800 RPM TQ 1550 lb-ft @ 1100 - PREDATOR NARROW	1	KMEM
BA-30-9810		PROPOSED - ENGINE CERTIFICATION CUSTOM CHASSIS	1	KMEM
BA-32-0035		COOLING/RADIATOR, 100" PREDATOR - NARROW	1	KMEM
BA-32-0070		ENGINE COOLANT FILTER - CUMMINS ISC - ISX	1	KMEM
BA-32-0085		COOLING SYSTEM CRITERIA	1	KMEM
BA-32-0100		TRANSMISSION COOLER	1	KMEM
BA-32-0120		RADIATOR SKID PLATE	1	KMEM
BA-32-0160		CHARGED AIR COOLER (FRONT MOUNT)	1	KMEM
BA-32-0245		COOLANT FAN, W/CLUTCH - CUMMINS ISX12	1	KMEM
BA-32-0340		HEATER AND COOLANT HOSES/PIPING	1	KMEM
BA-32-0420		LOW COOLANT INDICATOR LIGHT AND ALARM IN CAB	1	KMEM
BA-33-0020	>	SECONDARY BRAKING - ENGINE COMPRESSION BRAKE	1	KMEM
BA-33-0150		FAST IDLE CONTROL FOR ALL ELECTRONIC ENGINES - SMART WHEEL	1	KMEM
BA-33-0160		ENGINE AIR CLEANER	1	KMEM
BA-33-0180		SPARK ARRESTOR	1	KMEM
BA-33-0200		ACCELERATOR PEDAL - FLOOR MOUNT	1	KMEM
BA-33-0250		REMOTE THROTTLE & INTERLOCK HARNESS	1	KMEM
BA-40-0300		ALLISON 4000EVS TRANS. - COMPRESSION BRAKE	1	KMEM
BA-40-0660		FIVE (5) SPEED AUTOMATIC TRANSMISSION - 4000 SERIES	1	KMEM

PART NO	S	DESCRIPTION	QTY	ID
BA-40-0700		ALLISON TRANSMISSIONS, ELECTRONIC TOUCH PAD SHIFTER IN CAB	1	KMEM
BA-40-0855		TRANSMISSION OIL LEVEL SENSOR	1	KMEM
BA-40-0860		ALLISON PARK TO NEUTRAL	1	KMEM
BA-40-0910		ALLISON PRESELECT PROGRAMMING	1	KMEM
BA-40-0920		PRESELECT PROGRAMMED FOR 4TH GEAR	1	KMEM
BA-40-4720		TES-389 TRANS FLUID 4000EVS TRANSMISSION	1	KMEM
BA-45-0110		DRIVE LINES DANA-SPICER #1810 SERIES	1	KMEM
BA-49-0100		DIESEL EXHAUST FLUID TANK - 5 GALLON	1	KMEM
BA-50-0110		EXHAUST SYSTEM - DPF & SCR SYSTEM - INLINE SYSTEM	1	KMEM
BA-50-0155		ALUMINIZED STEEL EXHAUST TAILPIPE/OUTLET OS - DPF + SCR SYSTEM	1	KMEM
BA-50-2500		FUEL SYSTEM	1	KMEM
BA-50-2515	>	FUEL TANK - 65 GALLON, STEEL - ALL MID-MOUNTS	1	KMEM
BA-50-2625		FUEL LINES - FIBER REINFORCED HOSE	1	KMEM
BA-50-2645	>	CUMMINS FUEL-WATER SEPARATOR	1	KMEM
BA-50-2670		FUEL PUMP SECONDARY ELECTRIC, REQ. ON 210" W-B OR LONGER	1	KMEM
BA-50-2700		FUEL POCKET, LEFT SIDE REAR WHEEL WELL PANEL	1	KMEM
BA-50-5050	>	STEERING - DUAL SHEPPARD POWER STEERING GEARS	1	KMEM
BA-50-7115		STEERING COLUMN - CLOCK SPRING "NARROW"	1	KMEM
BA-50-7155		18" STEERING WHEEL - 4 SPOKE - "NARROW"	1	KMEM
BA-50-7170		SMART WHEEL CONTROLS ON STEERING WHEEL	1	KMEM
BA-50-9000		ROAD SAFETY KITS	1	KMEM
		****** HEADER, MM PLATFORM CHASSIS ELECTRICAL, 100" PREDATOR (OPTIONS)**	**1**	**KMEM**
		****** HEADER, MM PLATFORM W/ PUMP BODY ELECTRICAL (OPTIONS)**	**1**	**KMEM**
BE-01-0005		PREDATOR CHASSIS ELECTRICAL SYSTEM DESCRIPTION	1	KMEM
BE-01-0105		PREDATOR CHASSIS WIRING INSTALLATION	1	KMEM
BE-01-0150		DIRECT BATTERY GROUNDING STRAP - PREDATOR	1	KMEM
BE-01-0153		EMI/RFI PROTECTION	1	KMEM
BE-01-0205		PREDATOR 12 VOLT ELECTRICAL SYSTEM TESTING	1	KMEM
BE-05-0353		CLASS-1 ES-KEY MULTI-PLEXED ELECTRICAL SYSTEM 100" PREDATOR	1	KMEM
BE-05-0450		CLASS-1 ES-KEY ULTRAVIEW 450 DISPLAY	1	KMEM
BE-05-0800		INTER-LOCK MODULE FOR MULTIPLEX SYSTEM	1	KMEM
BE-05-0900		CHASSIS DIAGNOSTICS SYSTEM	1	KMEM
BE-05-1160		VOLTAGE MONITORING SYSTEM - 12 VOLT	1	KMEM
BE-05-1165		INDICATOR LIGHT AND ALARM PROVE-OUT SYSTEM	1	KMEM
BE-05-1170		SEQUENCER	1	KMEM
BE-05-1175		ELECTRICAL HARNESS INSTALLATION - 12 VOLT	1	KMEM
BE-10-0407		LEECE NEVILLE - 270 AMP 4949PA - ALTERNATOR	1	KMEM
BE-15-0680		BATTERIES - FIVE (5) EXIDE GROUP 31, 925CCA	1	KMEM
BE-15-1105		PREDATOR BATTERY STORAGE, STEEL, MFD, XMFD, LFD, XLFD	1	KMEM
BE-15-1500		BATTERY DISCONNECT SWITCH, ALL UNITS	1	KMEM
BE-15-1555		COLE HERSEE BATTERY JUMPER STUDS, DS BATTERY BOX	1	KMEM
BE-20-1600		12 VOLT POLARIZED CHARGE RECEPTACLE	1	KMEM
BE-20-1715		SHORELINE RECEPTACLE LABEL - NFPA	1	KMEM
BE-20-1750		SHORELINE LOCATION - ADJACENT TO DRIVER'S DOOR	1	KMEM
BE-30-0100		CONTROL SWITCHING - EATON MULTIPLEX SWITCHES - 12 ABOVE DRIVER	1	KMEM
BE-30-0120		CONTROL SWITCHING - EATON MULTIPLEX SWITCHES - 9 LOWER PANEL	1	KMEM
BE-30-2500		CONTROL SWITCHING LABELING	1	KMEM
BF-00-0505		WELDON #8080-0000-13 WHITE/RED HALOGEN INTERIOR LIGHTS (4)	1	KMEM
BF-00-5000		DOOR OPEN INDICATOR W/ INTEGRAL AUDIBLE ALARM	1	KMEM
		****** HEADER, 12V POWER/ USB CHARGING/ POWER - GROUND CIRCUITS, CUSTOM ******	**1**	**KMEM**
BF-01-6000		12 VOLT POWER AND GROUND CIRCUIT FOR ACCESSORIES IN DASH	1	KMEM
		****** HEADER, REAR/SIDE VISION CAMERA SYSTEMS ******	**1**	**KMEM**
BF-20-0000		DUAL HEADLIGHTS, HALOGEN, PREDATOR - DUAL BEZELS	1	KMEM
BF-20-0320		DAYTIME RUNNING LIGHTS, ALL CABS	1	KMEM
BG-00-0055		DUAL MODULE w/ CODE 3 65STA LED TURN SIGNAL & REQ WARN LIGHT	1	KMEM
BG-00-0430		CUST MM PLATFORM CHASSIS LED MARKER LIGHTS	1	KMEM
BG-00-0530		CUST MM PLATFORM BODY LED MARKER LIGHTS	1	KMEM
BG-00-1200		WHELEN LED MARKER LIGHTS @ TOP FRONT ROOF EDGE OF CAB	1	KMEM

PART NO	S	DESCRIPTION	QTY	ID
BG-00-1600		TRUCK-LITE MARKER LIGHTS @ EA SIDE OF CAB, ADJACENT TO DRIVER DOOR	1	KMEM
BG-00-1610		TRUCK-LITE MARKER/TURN LIGHTS @ EA SIDE OF BODY	1	KMEM
BG-00-1650		TRUCK-LITE MARKER LIGHTS @ REAR OF BODY - MM PLAT	1	KMEM
BG-00-1800		TRUCK-LITE DOT AMBER REFLECTORS @ SIDE OF BODY	1	KMEM
BG-00-1810		TRUCK-LITE DOT RED REFLECTORS @ REAR OF BODY	1	KMEM
BG-00-2915		TECNIQ #L10 LED LICENSE PLATE LIGHT @ DS REAR OF BODY	1	KMEM
BG-02-2517		CODE 3, #45 LED BRAKE & TURN W/ HAL REVERSE TRI HOUSING	1	KMEM
BH-04-1050		CAB STEP LIGHTS, TECNIQ EON 3 LED, ALL DEVICES	4	KMEM
BH-04-1130		BODY STEP LIGHTS, TECNIQ EON 3 LED, ALL DEVICES	4	KMEM
BH-05-2310		AERIAL ACCESS LADDER ILLUMINATION - WHELEN 3" LED - MM BODY	1	KMEM
	>	****** HEADER, HOSE BED LIGHTING ******	**1**	**KMEM**
BH-06-0100		UNITY HOSE BED LIGHTS, ALL DEVICES	1	KMEM
BH-06-2200		HOSE BED WORK LIGHT - SWITCH	1	KMEM
		****** HEADER, SCENE LIGHTS - MM / TDA**	**1**	**KMEM**
		****** HEADER, SCENE LIGHTS - MM PLATFORM W/ PUMP**	**1**	**KMEM**
BH-11-0500		NFPA (4) JW SPEAKER LED RECTANGLE GROUND LIGHTS, BELOW CAB DOORS	1	KMEM
BH-11-0560		GROUND LIGHTS, 2 LED BELOW PUMP PANEL RUNNING BOARD - RH	1	KMEM
		****** HEADER, BROW AND CAB RADIUS LIGHTS - CUSTOM CHASSIS**	**1**	**KMEM**
		****** HEADER, TELESCOPING LIGHTS, REAR OF CAB - CUSTOM CHASSIS**	**1**	**KMEM**
BI-00-0200		AERIAL BODY ELECTRICAL SYSTEM	1	KMEM
BI-00-0205		AERIAL BODY ELECTRICAL JUNCTION COMPARTMENT	1	KMEM
BI-00-0215		MID-MOUNT, AERIAL DEVICE ELECTRICAL JUNCTION COMPARTMENT	1	KMEM
BI-00-0525		BODY ELECTRICAL HARNESS - ES-KEY	1	KMEM
BJ-00-5115		PUMP ENCLOSURE WORK LIGHTS - TECNIQ LED	1	KMEM
BJ-00-5165		ENGINE COMPARTMENT WORK LIGHTS - TECNIQ LED	1	KMEM
		COMPARTMENT LIGHTS - MID MOUNT TANDEM AXLE	**1**	**KMEM**
BJ-02-0100	>	COMPT. LIGHTS, WELDON #2630 HALOGEN	11	KMEM
		****** CUSTOM MID MOUNT AERIAL NFPA WARNING LIGHT PACKAGE**	**1**	**KMEM**
BL-95-0000		NFPA COMPLIANT WARNING LIGHT PACKAGE - ALL UNITS	1	KMEM
BL-95-0100		LIGHT PACKAGE ACTUATION/CONTROLS - ALL UNITS	1	KMEM
BL-98-0000		WARNING LIGHT FLASH PATTERN - NFPA FLASH PATTERN	1	KMEM
BM-00-0204		CODE 3 UPPER PACKAGE - CUSTOM MID MOUNT AERIAL	1	KMEM
BM-02-0086	>	A-UPPER, CODE 3 LED 2780NFPA P1, RX 2700 80" PRIZM II BAR	1	KMEM
BM-02-1000		C-UPPER, CODE 3 HALOGEN 550 BEACONS, RED DRIVER, AMBER OFFICER	1	KMEM
BM-02-2000		B/D-UPPER REAR, COVERED BY LIGHTS IN ZONE C-UPPER	1	KMEM
BM-02-3000		B/D-UPPER FRONT, COVERED BY LIGHTS IN ZONE A-UPPER	1	KMEM
BM-07-0204		CODE 3 LOWER PACKAGE - CUSTOM MID MOUNT AERIAL	1	KMEM
BM-09-0018	>	A-LOWER FRONT, CODE 3 65 SERIES LED	1	KMEM
BM-09-0098		A-LOWER FRONT MOUNTING, CUSTOM CHASSIS	1	KMEM
BM-09-1014	>	C-LOWER REAR, CODE 3 65 SERIES LED	1	KMEM
BM-09-2006	>	B/D-LOWER FRONT, CODE 3 65 SERIES LED	1	KMEM
BM-09-2098		B/D-LOWER FRONT MOUNTING, CUSTOM CHASSIS	1	KMEM
BM-09-3006	>	B/D-LOWER MID, CODE 3 65 SERIES LED	1	KMEM
BM-09-3506	>	B/D-LOWER SECONDARY MID, CODE 3 65 SERIES LED	1	KMEM
BM-09-4006	>	B/D-LOWER REAR, CODE 3 65 SERIES LED	1	KMEM
BM-15-0000		LIGHT PACKAGE NFPA CERTIFICATION - ALL UNITS	1	KMEM
		****** HEADER, OPTIONAL WARNING LIGHTS**	**1**	**KMEM**
		****** HEADER, AUDIBLE WARNING & COMMUNICATION EQUIPMENT**	**1**	**KMEM**
BW-00-0510		CHASSIS SINGLE ELECTRIC (DOT) HORN	1	KMEM
BW-00-0560		CODE 3, #CA278, BACK-UP ALARM - 87DBA	1	KMEM
BW-00-5295		DELETE STANDARD DUAL AIRHORNS	1	KMEM
BW-01-0120		SIREN, WHELEN # 295HFS2, 100W - FLUSH MOUNT	1	KMEM
BW-01-1000		ONE (1) WHELEN SP123BMC SPEAKER	1	KMEM
		****** HEADER, PUMP, TANK & ACC, 100' PLAT 5-SECT, MM**	**1**	**KMEM**
DC-00-2355		WATEROUS S100, 1500 GPM SINGLE STAGE PUMP - MID MOUNT	1	KMEM
DC-01-4630		WATEROUS S100 MECHANICAL PUMP SEAL	1	KMEM
DC-01-6211		WATEROUS "C20" DRIVE UNIT, WATEROUS MID-MOUNT (FRONT DRIVE)	1	KMEM
DC-01-6490		PUMP RATIO (HALE, WATEROUS OR DARLEY)	1	KMEM

PART NO	S	DESCRIPTION	QTY	ID
DC-01-7140		WATEROUS AIR SHIFT	1	KMEM
DC-01-8590		PUMP SHIFT MANUAL OVERRIDE (HALE, WATEROUS OR DARLEY)	1	KMEM
DC-01-8615		WATEROUS PUMP SHIFT INDICATOR LIGHTS	1	KMEM
DC-01-9020		TRANSMISSION LOCK-UP (HALE, WATEROUS OR DARLEY)	1	KMEM
DC-02-1900		PUMP MOUNTS - MID-SHIP PUMPS	1	KMEM
DC-02-1990		PUMP INSTALLATION - CUSTOM	1	KMEM
DC-04-0120		MANIFOLD - DISCHARGE & SUCTION FOR 1250-2000 GPM INTERFACE PUMPING SYSTEM	1	KMEM
		****** HEADER, WATEROUS S100, PRESSURE CONTROL - MID MOUNT**	**1**	**KMEM**
DC-05-1225		FIRE RESEARCH "IN CONTROL" TGA-300 PRESSURE GOVERNOR	1	KMEM
DC-05-1295		TASK FORCE TIPS #A18 SERIES INTAKE RELIEF VALVE	1	KMEM
DC-05-2500		PUMP UL CERTIFICATION - 750 GPM & UP	1	KMEM
		WATEROUS, PUMP PRIMING PUMP AND CONTROLS	**1**	**KMEM**
DC-05-3680	>	TRIDENT "MANUAL" AIR PRIMING SYSTEM	1	KMEM
		WATEROUS, DRAINS & ACCESSORES	**1**	**KMEM**
DC-05-5110		ROTARY MASTER DRAIN VALVE	1	KMEM
DC-05-5400		DRAINS/BLEEDER "INNOVATIVE CONTROLS" LIFT UP @ ALL 1-1/2" OR LARGER	1	KMEM
DC-05-5500		SYNFLEX SUCTION, DISCHARGE, PRESSURE AND CONTROL LINES	1	KMEM
DC-10-2020		SIDE MOUNT PUMP MODULE, MM AERIAL	1	KMEM
DC-10-2500		PUMP MODULE - STEEL CONSTRUCTION	1	KMEM
		****** HEADER, SUCTIONS - MIDMOUNT, SIDE MOUNT**	**1**	**KMEM**
DC-14-3330		WATEROUS MAIN SUCTION INLETS 6" NST, 1500 GPM S100 PUMP	1	KMEM
DC-14-5300		SHORT NECK MAIN PUMP SUCTION INLETS - DS & OS	1	KMEM
DC-14-5560	>	6" NST MAIN PUMP SUCTION PRESSURE VENTED CAPS (2)	1	KMEM
		HEADER - AUXILIARY SUCTION/S - AERIALS	**1**	**KMEM**
DC-20-1000		2 1/2" AUX. SIDE SUCTION @ DS PANEL TO REAR OF MAIN INLET	1	KMEM
DC-20-1100		2 1/2" AKRON #8800 S.S. BALL VALVE, DS REAR AUX SUCTION	1	KMEM
DC-20-1200		SWING CONTROL @ VALVE, DS REAR AUX SUCTION	1	KMEM
DC-20-9500		BEHIND PANEL MOUNT	1	KMEM
		****** HEADER - TANK TO PUMP - MID-MOUNTS**	**1**	**KMEM**
DC-25-1200		TANK TO PUMP - 3" VALVE - LADDERS & PLATFORMS	1	KMEM
DC-25-3110		3" AKRON #8800 SERIES - S.S. BALL, VALVE , TANK TO PUMP	1	KMEM
DC-25-5110		3" PUSH/PULL CONTROL FOR TANK TO PUMP	1	KMEM
		****** HEADER - TANK FILL - MID-MOUNTS**	**1**	**KMEM**
DC-30-2100		TANK FILL LINE 2" FROM PUMP - SIDE MOUNT	1	KMEM
DC-30-2300		2" AKRON #8800 SERIES - S.S. BALL TANK FILL, SIDE MOUN	1	KMEM
DC-30-6500		PUSH/PULL CONTROL FOR TANK FILL	1	KMEM
		****** DISCHARGES & ACCESSORIES, MID MOUNT AERIAL - SIDE MOUNT**	**1**	**KMEM**
		DRIVER'S SIDE #1 MAIN DISCHARGE	**1**	**KMEM**
DC-35-0010		DS MAIN DISCHARGE #1 - SIDE MOUNT	1	KMEM
DC-35-0110		2 1/2" AKRON #8800 SERIES - S.S. BALL, DS #1, SIDE MOUNT	1	KMEM
DC-35-1815		DS #1 DISCH - 2 1/2" STRAIGHT NST & 30-DEGREE NST ELBOW	1	KMEM
DC-35-2010		2 1/2" NST PRESSURE VENTED CAP - DS DISCHARGE #1	1	KMEM
DC-35-2410		PUSH/PULL CONTROL FOR DS DISCHARGE #1 -SIDE MOUNT	1	KMEM
DC-35-3110		INNOVATIVE CONTROLS LIQUID FILLED 2 1/2" PRESS GAUGE SS- DS DISCHARGE #1	1	KMEM
		DRIVER'S SIDE #2 MAIN DISCHARGE	**1**	**KMEM**
DC-35-5010		DS MAIN DISCHARGE #2 - SIDE MOUNT	1	KMEM
DC-35-5110		2 1/2" AKRON #8800 SERIES - S.S. BALL, DS #2, SIDE MOUNT	1	KMEM
DC-35-6815		DS #2 DISCH - 2 1/2" STRAIGHT NST & 30-DEGREE NST ELBOW	1	KMEM
DC-35-7010		2 1/2" NST PRESSURE VENTED CAP - DS DISCHARGE #2	1	KMEM
DC-35-7410		PUSH/PULL CONTROL FOR DS DISCHARGE #2 -SIDE MOUNT	1	KMEM
DC-35-8110		INNOVATIVE CONTROLS LIQUID FILLED 2 1/2" PRESS GAUGE SS- DS DISCHARGE #2	1	KMEM
		OFFICER'S SIDE #1 MAIN DISCHARGE	**1**	**KMEM**
DC-39-0010	>	OS MAIN DISCHARGE #1 - SIDE MOUNT	1	KMEM
DC-39-0110		2 1/2" AKRON #8800 SERIES - S.S. BALL, OS #1, SIDE MOUNT	1	KMEM
DC-39-1815		OS #1 DISCH - 2 1/2" STRAIGHT NST & 30-DEGREE NST ELBOW	1	KMEM
DC-39-2010		2 1/2" NST PRESSURE VENTED CAP - OS DISCHARGE #1	1	KMEM

PART NO	S	DESCRIPTION	QTY	ID
DC-39-2410		PUSH/PULL CONTROL FOR OS DISCHARGE #1 -SIDE MOUNT	1	KMEM
DC-39-3110		INNOVATIVE CONTROLS LIQUID FILLED 2 1/2" PRESS GAUGE SS- OS DISCHARGE #1	1	KMEM
		OFFICER'S SIDE #2 MAIN DISCHARGE	**1**	**KMEM**
DC-39-5010	>	OS MAIN DISCHARGE #2 - SIDE MOUNT	1	KMEM
DC-39-5110		2 1/2" AKRON #8800 SERIES - S.S. BALL, OS #2, SIDE MOUNT	1	KMEM
DC-39-6815		OS #2 DISCH - 2 1/2" STRAIGHT NST & 30-DEGREE NST ELBOW	1	KMEM
DC-39-7010		2 1/2" NST PRESSURE VENTED CAP - OS DISCHARGE #2	1	KMEM
DC-39-7410		PUSH/PULL CONTROL FOR OS DISCHARGE #2 -SIDE MOUNT	1	KMEM
DC-39-8110		INNOVATIVE CONTROLS LIQUID FILLED 2 1/2" PRESS GAUGE SS- OS DISCHARGE #2	1	KMEM
		CROSSLAY #1 DISCHARGE	**1**	**KMEM**
DC-47-0400		CROSSLAY #1, 1 1/2" - AERIAL	1	KMEM
DC-47-1110		CROSSLAY #1 CAPACITY - 200' OF 1 3/4" HOSE	1	KMEM
DC-47-1410		CROSSLAY #1 - DOUBLE STACK HOSE DESIGN	1	KMEM
DC-47-1510		1 1/2" NST CHICKSAN SWIVEL - CROSSLAY #1	1	KMEM
DC-47-2110		CROSSLAY #1, PLUMBING, 2" STAINLESS STEEL PIPING	1	KMEM
DC-47-2210		2" AKRON #8800 SERIES - S.S. BALL, VALVE CROSSLAY #1, DISCH	1	KMEM
DC-47-2610		PUSH/PULL 1/4 TURN CONTROL CROSSLAY #1	1	KMEM
DC-47-3210		INNOVATIVE CONTROLS LIQUID FILLED 2 1/2" PRESS GAUGE SS - CROSSLAY #1	1	KMEM
		CROSSLAY #2 DISCHARGE	**1**	**KMEM**
DC-47-5400		CROSSLAY #2, 1 1/2" - AERIAL	1	KMEM
DC-47-6110		CROSSLAY #2 CAPACITY - 200' OF 1 3/4" HOSE	1	KMEM
DC-47-6410		CROSSLAY #2 - DOUBLE STACK HOSE DESIGN	1	KMEM
DC-47-6510		1 1/2" NST CHICKSAN SWIVEL - CROSSLAY #2	1	KMEM
DC-47-7110		CROSSLAY #2, PLUMBING, 2" STAINLESS STEEL PIPING	1	KMEM
DC-47-7210		2" AKRON #8800 SERIES - S.S. BALL, VALVE CROSSLAY #2,	1	KMEM
DC-47-7610		PUSH/PULL 1/4 TURN CONTROL CROSSLAY #2	1	KMEM
DC-47-8210		INNOVATIVE CONTROLS LIQUID FILLED 2 1/2" PRESS GAUGE SS - CROSSLAY #2	1	KMEM
		CROSSLAY OPTIONS - MM AERIAL	**1**	**KMEM**
DC-50-7015	>	VINYL CROSS LAY COVER	1	KMEM
DC-50-7030		CROSSLAY COVER RED IN COLOR	1	KMEM
	>	**WATERWAY DISCHARGE**	**1**	**KMEM**
DC-62-0225		AERIAL WATERWAY DISCHARGE - MM AERIAL	1	KMEM
DC-62-1150		WATERWAY DISCHARGE, PLUMBING, 5" STAINLESS STEEL - MM	1	KMEM
DC-62-1240		4" AKRON #8840 SERIES VALVE, WATERWAY	1	KMEM
DC-62-1950	>	AKRON HANDWHEEL GEAR VALVE CONTROL, WATERWAY	1	KMEM
DC-62-2210		INNOVATIVE CONTROLS LIQUID FILLED 2 1/2" PRESS GAUGE SS - WATERWAY	1	KMEM
		PUMP PANELS & ACCESSORIES	**1**	**KMEM**
DD-65-0510		SIDE MOUNT PUMP PANEL - MID-MOUNT	1	KMEM
DD-65-4115		SIDE MOUNT PANELS - 12 GAUGE BRUSHED STAINLESS STEEL	1	KMEM
DD-65-4715		HORIZONTALLY HINGED GAUGE PANEL - MID-MOUNT	1	KMEM
DD-65-4810		OFFICER SIDE VERTICALLY HINGED PUMP ACCESS DOOR - SIDE MOUNT	1	KMEM
DD-65-4820		PUMP ACCESS DOORS - MID-MOUNT	1	KMEM
DD-65-5150		PANEL FASTENERS	1	KMEM
DD-65-5510		CAPS AND ADAPTERS SAFETY TETHER - BALL CHAIN	1	KMEM
DD-65-8820		PUMP PANEL DISCH./SUCTION TRIM PLATES, HIGH POLISHED	1	KMEM
DD-65-9000		DISCHARGE GAUGE TRIM BEZELS	1	KMEM
DD-65-9110		IDENTIFICATION PLATES	1	KMEM
DD-66-0300		PUMP OPERATOR'S PANEL LIGHT SHIELD - MID-MOUNT	1	KMEM
DD-66-0305		WELDON #2630 HALOGEN LIGHTS - MID-MOUNT	1	KMEM
DD-66-2100		OS PUMP PANEL LIGHTING	1	KMEM
DD-66-2105		WELDON #9186 HALOGEN LIGHTS - OS PUMP PANEL	1	KMEM
		PUMP OPERATOR'S PANEL - SIDE MOUNT, AERIAL - MID MOUNT	**1**	**KMEM**
DD-70-2334		FIRE RESEARCH "IN CONTROL" PRESSURE GOVERNOR CONTROL @ PANEL	1	KMEM
DD-70-2410		PUMP PRESSURE & VACUUM TEST PORTS @ PANEL	1	KMEM

PART NO	S	DESCRIPTION	QTY	ID
DD-70-4125	>	DELETE - MASTER PRESSURE & COMPOUND GAUGES	1	KMEM
DD-70-4130		**** CONSIDER DELETING MASTER GAUGES - IN GOVERNOR DISPLAY ****	1	KMEM
DD-70-4680		PRESSURE & COMPOUND GAUGE RANGES - SINGLE STAGE	1	KMEM
DD-70-4900		AUXILIARY ENGINE COOLER	1	KMEM
		WATER TANK LEVEL GAUGE - AERIAL, MID-MOUNT	**1**	**KMEM**
DD-72-0410		FIRE RES - TANK VISION #WLA300-A00 LED WATER TANK GAUGE - PRIMARY	1	KMEM
DD-72-1300	>	FIRE RES WATER LEVEL - 1/4" NPT PRESS TRANS @ BOTTOM TANK	1	KMEM
DD-80-0110		SLIDE-OUT STEP @ DRIVER'S PUMP OPERATOR'S PANEL	1	KMEM
DE-00-1070	>	**** HEADER, MM PLATFORMS, WATER TANK	1	KMEM
		WATER TANKS/OPTIONS AERIALS	**1**	**KMEM**
DE-05-1700	>	UPF POLYIIE TANK, 300 GAL. - AERIAL	1	KMEM
DE-05-6000		TANK DESCRIPT, CONSTR AND MOUNT, UPF POLY IIE TANK	1	KMEM
JA-00-0100		BODY AND COMPARTMENT HEADER (ALL AERIAL DEVICES)	1	KMEM
JA-00-5070		GENERAL BODY DESCRIPT, MID-MOUNT, 100' PLATFORMS	1	KMEM
TF-08-0800	>	ANY MID-MOUNT, TURNTABLE COMPTS, LH & RH SIDE, LOW BODY	1	KMEM
TF-08-6000	>	COMPARTMENTATION, 100-5-MM STYLE #1H-LO	1	KMEM
		**** HEADER, MM BODY OPTIONS (WITH PUMP)**	**1**	**KMEM**
TF-10-0100		BEVELED OVERLAPPING DOORS, ALL COMPARTMENTS, ALL DEVICES	1	KMEM
TF-10-1900		BRUSHED FINISHED DOOR PANS - 2" THICK DOORS	1	KMEM
TF-10-2700		DOOR HINGE FOR BEVELED OVERLAPPING HINGED DOORS	1	KMEM
TF-10-2800		DOOR SEAL FOR BEVELED OVERLAPPING HINGED DOORS	1	KMEM
TF-10-2940		ROTARY LATCHES WITH D-RING HANDLES	1	KMEM
TF-10-3150		GAS SHOCK ON HORIZONTALLY & VERTICALLY HINGED DOORS	1	KMEM
TF-10-6000		COMPARTMENT FLOORS (AERIALS ONLY)	1	KMEM
TF-11-0500		COMPARTMENT GENERAL DESCRIPTION, ALL LADDERS & PLATFORMS	1	KMEM
TF-11-1460		PAINTED REAR BODY PANEL, MID-MOUNTS	1	KMEM
TF-11-2275		STAINLESS STEEL OUTRIGGER COVER PANEL, FOUR RIGGER DEVICES	1	KMEM
TF-11-3000		BODY RUB RAILS, 1" X 1" EXTRUSION	1	KMEM
TF-12-1000		RUNNING BOARD STEPS (AERIALS ONLY)	1	KMEM
TF-13-3085		TURNTABLE BODY MODULE, MID MOUNT PLATFORM	1	KMEM
TF-13-3200		MID-MOUNT, TURNTABLE LADDERS	1	KMEM
TF-13-3250		MID-MOUNT, PLATFORM ACCESS LADDER, DRIVER SIDE OF APPARATUS	1	KMEM
TF-13-5040		MID-MOUNT PLATFORM, BODY HANDRAILS, EXTRUDED ALUMINUM	1	KMEM
TF-14-1000		ALUMINUM WHEEL WELL LINERS	1	KMEM
TF-14-1710		POLISHED ALUMINUM FENDERETTES, TANDEM AXLE BODIES	1	KMEM
TF-14-5000		REAR MUD FLAPS	1	KMEM
TF-14-6500		PAINTED REAR TOW EYES, THROUGH REAR SHEET	1	KMEM
TF-15-1150		HOSE BED, MID-MOUNT AERIALS	1	KMEM
TF-15-1900		ALUMINUM HOSE BED FLOORING - AERIAL	1	KMEM
TF-15-3115		HOSE BED COVER, VINYL WITH VELCRO	1	KMEM
TF-15-3190		HYPALON MATERIAL RED IN COLOR	1	KMEM
		**** HEADER, COMPARTMENT ACCESSORIES - MIDMOUNTS**	**1**	**KMEM**
TJ-05-1005		ADJUSTABLE SHELF DESCRIPTION - MIDMOUNT	1	KMEM
TJ-05-2000	>	(AUTO QTY) ADJUSTABLE SHELF(S), MOUNTED AS DIRECTED	4	KMEM
TJ-10-1005		250#, FLOOR MOUNTED, ROLLOUT TRAY DESCRIPTION - MIDMOUNT	1	KMEM
TJ-10-1105	>	(AUTO QTY) ROLLOUT TRAY(S), MOUNTED AS DIRECTED	2	KMEM
TJ-55-1010		SWING OUT TOOL BOARD, PAC TRAC DOUBLE FACED EXTRUSION - MIDMOUNT	1	KMEM
TJ-55-1200	>	(AUTO QTY) SWING OUT TOOL BOARD(S), MOUNTED AS DIRECTED	1	KMEM
	>	**"NOTE" READ THIS BEFORE ADDING ANY ADDITIONAL GROUND LADDERS**	**1**	**KMEM**
		**** HEADER, 100-5-MM-PL GROUND LADDERS**	**1**	**KMEM**
TN-00-5090	>	CENTER LADDER STORAGE, 100-5-MM-PL	1	KMEM
TN-00-7030		HINGED PAINTED DOORS, LADDER STORAGE, MID-MOUNTS ONLY	1	KMEM
TN-01-0870		ALCO-LITE LADDER COMP, 100-5-MM-PL	1	KMEM
TN-02-1150		ALCO-LITE PEL-35 35' 2-SECTION EXTENSION LADDER (ALUM)	1	KMEM
TN-02-1170		ALCO-LITE PEL-24 24' 2-SECTION EXTENSION LADDER (ALUM)	1	KMEM
TN-02-2510		ALCO-LITE PRL-16 16' ROOF LADDER W/FOLDING HOOKS (ALUM)	2	KMEM
TN-02-7000		ALCO-LITE AEL-14 14' ATTIC EXTENSION LADDER (ALUM)	1	KMEM
TN-02-8010		ALCO-LITE FL-10 10' FOLDING ATTIC LADDER (ALUM)	1	KMEM

PART NO	S	DESCRIPTION	QTY	ID
		****** HEADER, PIKE POLES & HOLDERS - AERIALS**	**1**	**KMEM**
TN-20-0000		ADDITIONAL ITEMS SHIPPED WITH VEHICLE, ALL AERIAL DEVICES	1	KMEM
		****** HEADER, LOOSE EQUIPMENT - AERIAL**	**1**	**KMEM**
TN-35-1015		TWO (2) ZICO #SAC-44 FOLDING WHEEL CHOCKS, (2) MTD DRIVER SIDE	1	KMEM
		****** HEADER, 100' PLATFORM, MID-MOUNT 5-SECTION**	**1**	**KMEM**
TQ-00-1500		100' PLATFORM, MID-MOUNT 5-SECT GEN, INTENT & DESIGN STANDAR	1	KMEM
TQ-00-3005		MOUNTING OF AERIAL, MID-MOUNTS	1	KMEM
TQ-00-3420		HEIGHT AND REACH, 100' 5-SECT. MM PLATFORM	1	KMEM
TQ-00-4000		MATERIAL STANDARDS, ALL DEVICES	1	KMEM
TQ-00-5055		100' PLATFORM, MID-MOUNT 5-SECT. HYDRAULIC SYSTEM	1	KMEM
TQ-00-5130		PARKER HOSE KIT - 4 JACK UNIT MID MOUNT	1	KMEM
TQ-00-6120		HYDRAULIC PUMP - PRESSURE COMPENSATED	1	KMEM
TQ-00-7030		HYDRAULIC RESERVOIR - MID MOUNT	1	KMEM
TQ-00-7070		HYDRAULIC OIL - REGULAR - A/W 46 - 120 GAL	1	KMEM
TQ-00-7115		DIVERTER VALVE, MID-MOUNT DEVICES	1	KMEM
TQ-00-7230		OUTRIGGER HYDRAULIC CONTROL VALVE - MM, PROPORTIONAL	1	KMEM
TQ-00-7460		ELECTRIC TURNTABLE HYDRAULIC CONTROL VALVE, MM PLATFORM	1	KMEM
TQ-00-7505		HYDRAULIC SYSTEM FILTRATION	1	KMEM
TQ-00-8550		MID-MOUNT PLATFORM, "IQAN" MOTION CONTROL SYSTEM - ELECTRIC CONTROLS @ TT	1	KMEM
TQ-00-8700		HYDRAULIC PUMP PRESSURE - DISPLAY	1	KMEM
TQ-00-8710		ELEVATION ANGLE OF LADDER - DISPLAY	1	KMEM
TQ-00-8715		VERTICAL HEIGHT OF LADDER - DISPLAY	1	KMEM
TQ-00-8725		DEGREE OF ROTATION FROM VEHICLE CENTERLINE - DISPLAY	1	KMEM
TQ-00-8730		E-ZONE CAB & BODY AVOIDANCE WARNING - DISPLAY	1	KMEM
TQ-00-8735		E-ZONE SHORT JACK WARNING - DISPLAY	1	KMEM
TQ-00-8740		CRADLE ALIGNMENT MESSAGE - DISPLAY	1	KMEM
TQ-00-8750		DEVICE LOAD MONITORING - DISPLAY	1	KMEM
TQ-00-8760		E-SPEED LADDER TIP SPEED CONTROL - DISPLAY	1	KMEM
TQ-00-8765		E-CUSH RAMP CONTROL FOR ELEVATION - DISPLAY	1	KMEM
TQ-00-8770		E-CUSH RAMP CONTROL FOR EXTENSION & RETRACTION - DISPLAY	1	KMEM
TQ-00-8895		WARNING MESSAGES - TURNTABLE & PLATFORM	1	KMEM
TQ-00-9555		100' PLATFORM, MID-MOUNT 5-SECT. EMERG HYD. PUMP, EPU	1	KMEM
TQ-01-1000		HOT SHIFT PTO W/CONTROLS IN CAB	1	KMEM
TQ-01-1100		FAST IDLE CONTROL FOR ALL AERIAL DEVICES	1	KMEM
TQ-02-0225		100' PLATFORM, MID-MOUNT 5-SECTION TORQUE BOX	1	KMEM
TQ-02-1225		100' PLATFORM, MID-MOUNT 5-SECTION OUTRIGGERS	1	KMEM
TQ-02-1725		100' PLAT, MID-MOUNT 5-SECT OUTRIGGERS - HORIZONTAL CYLINDER	1	KMEM
TQ-02-1925		100' PLAT, MID-MOUNT 5-SECT OUTRIGGERS - VERTICAL CYLINDERS	1	KMEM
TQ-02-2110		IQAN - OUTRIGGER STRING POTENTIOMETER - FOUR (4) OUTRIGGERS	1	KMEM
TQ-02-2200		OUTRIGGER/JACK FOOT PADS, FOUR (4) JACK DEVICES	1	KMEM
TQ-02-2350		AUXILARY JACK PADS, FOUR (4) 24" X 24" x 1" POLY	1	KMEM
TQ-02-2500		OUTRIGGER INTERLOCK SYSTEM & ALARM, ALL DEVICES	1	KMEM
		****** HEADER - OUTRIGGER LIGHTING, FOUR (4) OUTRIGGERS**	**1**	**KMEM**
TQ-02-5100		NO LOLLIPOP LIGHTS ON OUTRIGGER BEAMS	1	KMEM
TQ-02-5220		HALOGEN OUTRIGGER GROUND LIGHTS - RECTANGLE, 4-OUTRIGGERS	1	KMEM
TQ-02-5275		OUTRIGGER WARNING LIGHTS FROM LIGHT PACKAGE	1	KMEM
TQ-02-6005		OUTRIGGER WARNING LIGHT ACTIVATION, PRIMARY WARNING	1	KMEM
TQ-02-6800		OUTRIGGER SCOTCHLITE, WHITE	1	KMEM
TQ-02-7075		MM PLATFORM, BUTTON OUTRIGGER CONTROLS - FOUR JACKS	1	KMEM
TQ-02-9220		OUTRIGGER LEVELS MID-MOUNT DEVICES; TWO (2)	1	KMEM
TQ-03-1400		100' PLATFORM, MID-MOUNT 5-SECTION TURNTABLE	1	KMEM
TQ-03-3010		TURNTABLE DECK - ALUMINUM TREADPLATE	1	KMEM
TQ-04-1850		HEEL PIN STEP ON TURNTABLE, APPLICABLE DEVICES	1	KMEM
TQ-04-1860		TURNTABLE HANDRAILS, KNURLED ALUMINUM, MID-MOUNTS	1	KMEM
TQ-04-2130		HEEL PIN - 100' HD MM LADDER & 81', 95', 100' MM PLAT	1	KMEM
TQ-04-2250		TURNTABLE RETENTION BOLTS, APPLICABLE DEVICES	1	KMEM
TQ-04-2300		STAINLESS STEEL CRADLE ALIGNMENT ARROWS ON TURNTABLE	1	KMEM
TQ-04-2810		SAFETY CHAINS BETWEEN TURNTABLE HANDRAIL, MID-MOUNTS	1	KMEM
TQ-04-7300		100' PLATFORM, MID-MOUNT 5-SECTION 5" TURNTABLE SWIVEL	1	KMEM

PART NO	S	DESCRIPTION	QTY	ID
TQ-04-9000		IQAN - SWIVEL ROTATION ENCODER	1	KMEM
TQ-06-0460		100' PLATFORM, MID-MOUNT 5-SECT, LADDER CONSTRUCTION	1	KMEM
TQ-06-1850		100' PLATFORM 5-SECT MM, LADDER DIMENSIONS	1	KMEM
TQ-06-3000		RUNG COVERS - PHOTOLUMINESCENT, ALL DEVICES	1	KMEM
TQ-06-9000		AERIAL TRAVEL SUPPORT, ALL DEVICES	1	KMEM
TQ-06-9020		CRADLE ILLUMINATION LIGHTS - HALOGEN LIGHTS	1	KMEM
TQ-07-1500		100' PLATFORM, MID-MOUNT 5-SECT, ELEVATION SYSTEM	1	KMEM
TQ-07-2800		IQAN - INCLINOMETER	1	KMEM
TQ-07-2801		IQAN - MOMENT LOAD INDICATOR	1	KMEM
TQ-07-2815		IQAN - E-CUSH CONTROL, ELEVATION SYSTEM - PLATFORM & TURNTABLE	1	KMEM
TQ-07-3020		IQAN LOAD METER TURNTABLE & PLATFORM	1	KMEM
TQ-08-1500		100' PLATFORM, MID-MOUNT 5-SECT, ROTATION SYSTEM	1	KMEM
TQ-08-2820		ROTATION MOTOR AND BRAKE - 48" INTERNAL BEARINGS	1	KMEM
TQ-08-3050		IQAN - "E-SPEED" SAFETY SYSTEM, PLATFORM & TURNTABLE	1	KMEM
TQ-08-3110		IQAN - "E-ZONE" ROTATION SAFETY SYSTEM, 4-OUTRIGGERS	1	KMEM
TQ-08-3680		IQAN - "E-ZONE" CAB & BODY PROXIMITY SYSTEM - PLATFORM & TURNTABLE	1	KMEM
TQ-09-1500		100' PLATFORM, MID-MOUNT 5-SECT, EXTENSION/RETRACTION SYSTEM	1	KMEM
TQ-09-2350		EXTENSION CYLINDERS PAINTED LADDER PAINT COLOR	1	KMEM
TQ-09-2800		IQAN - EXTENSION SYSTEM STRING POTENTIOMETER	1	KMEM
TQ-09-2815		IQAN - "E-CUSH" EXTENSION/RETRACTION SYSTEM - PLATFORM & TURNTABLE	1	KMEM
TQ-09-3000		LADDER SLIDE PADS, ALL DEVICES	1	KMEM
		LADDER EXTENSION NUMBERS, ALL DEVICES	**1**	**KMEM**
TQ-09-3150		LADDER LEVEL INDICATOR (BASE SECTION) - LIGHTED	1	KMEM
TQ-09-3340		PLATFORM, CABLE/HOSE/WIRE ROUTING, 5-SECTIONS	1	KMEM
		****** 2010 - MID MOUNT PLATFORM CONSTRUCTION - OPTIONS ******	**1**	**KMEM**
TQ-09-6060		PLATFORM STRUCTURE FINISH - PAINTED TO MATCH LADDER COLOR	1	KMEM
TQ-09-6100		PLATFORM DOORS, HINGED @ REAR, LATCHED @ FRONT SELF CLOSE	1	KMEM
TQ-09-6200		PLATFORM, REAR ACCESS LADDER AND REAR GATE	1	KMEM
TQ-09-6210		MID MOUNT PLATFORM, REAR REAR ENTRY GATE	1	KMEM
TQ-09-7100		PLATFORM FLOOR	1	KMEM
TQ-09-7200		PLATFORM MOUNT	1	KMEM
TQ-09-7300		PLATFORM LEVELING SYSTEM	1	KMEM
TQ-09-8000		PLATFORM BOTTOM HEAT SHIELDS, .09" TREAD PLATE	1	KMEM
TQ-09-8100		PLATFORM EXT. HEAT SHIELDS, .09" PAINTED ALUMINUM	1	KMEM
TQ-09-8200		PLATFORM SAFETY BELT LOOPS AND EXTERIOR LIFTING POINTS	1	KMEM
		****** HEADER - PLATFORM 120 VOLT ELECTRICAL SYSTEM & ACCESSORIES**	**1**	**KMEM**
TQ-11-3001		PLAT, 120 VOLT ELECTRICAL SYSTEM	1	KMEM
TQ-11-3050		DELETE TWO (2) RECEPTACLES FROM PLATFORM	1	KMEM
TQ-11-3490		NO 120V LIGHTS REQUIRED ON REAR OF PLATFORM	1	KMEM
TQ-11-5045		NO 120V LIGHTS REQUIRED ON FRONT OF PLATFORM	1	KMEM
TQ-11-5170		NO 120V LIGHTS REQUIRED ON BOTTOM OF PLATFORM	1	KMEM
TQ-11-5650		NO 120V LIGHTS REQUIRED ON SIDES OF PLATFORM	1	KMEM
		****** HEADER - PLATFORM, 12 VOLT ELECTRICAL SYSTEM & ACCESSORIES**	**1**	**KMEM**
TQ-11-6020		HEEL PIN STEP LIGHTS - TECNIQ EON 3 LED LIGHTS	1	KMEM
TQ-11-6059		TURNTABLE CONSOLE STEP LIGHT - TECNIQ EON 3 LED	1	KMEM
TQ-11-6075		PLATFORM CONSOLE STEP LIGHT - TECNIQ EON 3 LED LIGHT	1	KMEM
TQ-11-6080		TURNTABLE & PLATFORM CONTROL CONSOLE LIGHTING - LUMA BAR LED H2O	1	KMEM
TQ-11-6120		RED LED MARKER LIGHTS - PLATFORM	1	KMEM
TQ-11-6210		TWO (2) UNITY SPOTS @ LADDER BASE SECTION	1	KMEM
TQ-11-6310		ONE (1) UNITY SPOT & ONE (1) FLOOD @ PLATFORM	1	KMEM
TQ-11-8100	>	NO PLATFORM WARNING LIGHTS REQUIRED	1	KMEM
TQ-12-1000		PLATFORM, CONTROL STATIONS	1	KMEM
TQ-12-1080		MM PLATFORM, CONSOLE LOCATED @ LH SIDE OF TURNTABLE, STD	1	KMEM
TQ-12-1095		PAINTED ALUMINUM TURNTABLE CONSOLE - MATCH LADDER COLOR	1	KMEM
TQ-12-1550		100' PLATFORM, MID-MOUNT 5-SECT. TURNTABLE CONTROL STATION	1	KMEM
TQ-12-2520		FIRE RESEARCH INSIGHT FLOWMETER @ TURNTABLE CONSOLE	1	KMEM
TQ-12-2595		TURNTABLE CONSOLE COVER - PAINTED RADIUS	1	KMEM

PART NO	S	DESCRIPTION	QTY	ID
TQ-12-6000		IQAN - MULIT-PLEX CONTROLLERS FOR PLATFORM	1	KMEM
TQ-12-6610		PLATFORM CONTROL STATION, RIGHT REAR OF PLATFORM	1	KMEM
TQ-12-6635		IQAN - MDM III DISPLAY @ PLATFORM CONTROL STATION	1	KMEM
TQ-12-6850		100' PLATFORM, MID-MOUNT 5-SECTION PLATFORM CONTROL STATION	1	KMEM
TQ-12-7100		PAINTED COVER FOR PLATFORM CONTROLLERS	1	KMEM
TQ-14-2200		PLATFORM, FIRE RESEARCH 2-WAY COMMUNICATION SYSTEM - LOWER CONTROL	1	KMEM
TQ-14-2205		PLATFORM, FIRE RESEARCH 2-WAY COMMUNICATION SYSTEM - UPPER SPEAKER/MIC	1	KMEM
TQ-15-0010		LADDER ANGLE INDICATOR (FLY SECTION) - LIGHTED	1	KMEM
TQ-16-1550	>	DELETE BREATHING AIR SYSTEM, ALL PLATFORM DEVICES	1	KMEM
TQ-18-0550		100' PLATFORM, M-M, 5-SECTION WATERWAY SYSTEM	1	KMEM
TQ-18-1240		100' PLATFORM, M-M, 5-SECTION WATERWAY	1	KMEM
TQ-18-2560		5" HEEL PIN SWIVEL - S-PIPES, -12 TO 80 DEGREES	1	KMEM
TQ-18-2600		AUTOMATIC WATER DRAIN/VENT	1	KMEM
TQ-18-3000		ALL DEVICES, WATERWAY RELIEF VALVE	1	KMEM
TQ-18-3020		MID-MOUNT AERIAL WATERWAY DRAIN, 1 1/2" VALVE	1	KMEM
TQ-18-5050		5-SECTION PLATFORM, PLATFORM WATERWAY SYSTEM, SINGLE GUN	1	KMEM
TQ-18-5100		SHOWER NOZZLE UNDER PLATFORM (MANUAL)	1	KMEM
		PLATFORM MANUAL TFT VALVE UNDER MONITOR - SINGLE	**1**	**KMEM**
TQ-18-5215		2.5" NH GATED ELBOW LEFT HAND - C1 - VALVE UNDER MONITOR	1	KMEM
TQ-18-5255		BLIND PLUG - C2 - VALVE UNDER MONITOR	1	KMEM
TQ-18-5265		BLIND PLUG - C3 - VALVE UNDER MONITOR	1	KMEM
TQ-18-5275		2.5" NH GATED ELBOW RIGHT HAND - C4 - VALVE UNDER MONITOR	1	KMEM
TQ-18-6100	>	PLATFORM, SINGLE AKRON #3481 MONITOR	1	KMEM
TQ-18-6200		PLATFORM, AKRON #5160 NOZZLE	1	KMEM
TQ-20-1500		100' PLATFORM, MID-MOUNT 5-SECTION LADDER CAPACITIES	1	KMEM
TQ-20-3500		5-SECTION PLATFORM, WATERWAY CAPACITIES - SINGLE GUN	1	KMEM
TQ-50-0100		FIRE DEPT AERIAL FAMILIARIZATION - PROVIDED BY FACTORY	1	KMEM
TQ-50-0140		FACTORY FAMILIARIZATION - FOUR (4) DAYS	1	KMEM
TQ-50-0600		AERIAL SERVICE, ALL DEVICES	1	KMEM
TQ-50-0700		WARNING DECALS, ALL DEVICES	1	KMEM
TQ-52-0100		AERIAL LADDER, MANUALS, TWO (2) SETS	1	KMEM
TQ-70-1500		100' PLATFORM MID-MOUNT 5-SECTION CERT. & TESTING	1	KMEM
		****** HEADER - PAINT SECTION - ALL UNITS ******	**1**	**KMEM**
UA-00-1100		GENERAL PAINT DESCRIPTION - ALL	1	KMEM
UA-00-1200		GENERAL PRIMER & PREP DESCRIPTION - LADDER/PLATFORM	1	KMEM
UA-00-1400		GENERAL FINISH PAINT DESCRIPTION - LADDER/PLATFORM	1	KMEM
UA-00-2700		BODY BUFFING & FINISH - LADDER/PLATFORM	1	KMEM
		****** HEADER - LADDER/PLATFORM BODY PAINT ******	**1**	**KMEM**
UA-03-0100		INSIDE/UNDERSIDE BODY PAINTED BLACK - LADDER/PLATFORM	1	KMEM
UA-03-0300		JOB COLOR COMPARTMENT INT W/SPATTER PAINT - LADDER/PLATFORM	1	KMEM
UA-03-0900		SINGLE COLOR BODY PAINT SCHEME - LADDER/PLATFORM	1	KMEM
UA-03-2200		PUMPHOUSE & PLUMBING PAINTED JOB COLOR - LADDER/PLATFORM	1	KMEM
		****** HEADER - TANDEM AXLE CUSTOM CHASSIS PAINT (AERIAL)**	**1**	**KMEM**
UA-05-0050		CUSTOM CAB PRIMER & PREP	1	KMEM
UA-05-0070		CUSTOM FINISH PAINT & PREP	1	KMEM
UA-05-0100		SINGLE COLOR CUSTOM CAB PAINT SCHEME	1	KMEM
UA-05-0350		CUSTOM CAB BUFFING & FINISH	1	KMEM
UA-05-0365		CUSTOM CAB INTERIOR PAINT - JOB COLOR	1	KMEM
UA-05-0400		CUSTOM CHASSIS GLOSS BLACK COLOR FRAME RAILS	1	KMEM
UA-05-0505		CUSTOM CHASSIS WHEEL AND HUB PAINT - TANDEM AXLE	1	KMEM
UA-06-0200		LADDER, PAINTING, ALL DEVICES, WHITE #91528	1	KMEM
UA-06-0450		EXTENSION CYLINDERS PAINTED TO MATCH LADDER COLOR	1	KMEM
UA-06-0905		TORQUEBOX PAINT - BLACK	1	KMEM
UA-06-1100		OUTRIGER PAINT - SILVER URETHABOND 104	1	KMEM
UA-06-1205		TURNTABLE PAINT - LADDER COLOR	1	KMEM
UA-06-1215		TURNTABLE CONSOLE PAINT - LADDER COLOR	1	KMEM
UA-06-1225		LIFT CYLINDERS CONSOLE PAINT - LADDER COLOR	1	KMEM
UA-06-1500		LADDER RUST INHIBITOR - ALL DEVICES	1	KMEM

PART NO	S		DESCRIPTION	QTY	ID
UA-06-2110		>	PAINT CODE, SINGLE COLOR, FILL IN BLANKS	1	KMEM
UA-06-2130			PAINT CODES, AERIAL DEVICE - WHITE #91528	1	KMEM
UA-06-2200			PINT OF TOUCH-UP PAINT	1	KMEM
UA-06-2510			FINALIZATION & DETAILING - LADDER/PLATFORM	1	KMEM
UA-06-2850			RUSTPROOFING WARRANTY, TEN (10) YEAR	1	KMEM
			****** HEADER, LETTERING & STRIPING - 100-5-MM-PL**	**1**	**KMEM**
UA-12-0100			COMPUTER GENERATED LETTERING	1	KMEM
UA-12-1220			GOLDLEAF W/ DUAL DROP SHADOW LETTERING ON FRONT CAB DOORS	1	KMEM
UA-12-1245			3" LETTERING ON FRONT CAB DOORS	1	KMEM
UA-12-1760			GOLDLEAF W/ DUAL DROP SHADOW LETTERING ON CREW CAB DOORS	1	KMEM
UA-12-1785			3" LETTERING ON CREW CAB DOORS	1	KMEM
UA-12-2720			GOLDLEAF W/ DUAL DROP SHADOW LETTERING ON FRONT OF CAB	1	KMEM
UA-12-2745			3" LETTERING ON FRONT OF CAB	1	KMEM
UA-12-3120			GOLDLEAF W/ DUAL DROP SHADOW LETTERING ON CAB SIDE PANEL	1	KMEM
UA-12-3145			3" LETTERING ON CAB SIDE PANEL	1	KMEM
UA-12-3720			GOLDLEAF W/ DUAL DROP SHADOW LETTERING ON REAR BODY PANEL	1	KMEM
UA-12-3745			3" LETTERING ON REAR BODY	1	KMEM
UA-13-0100			LETTERING FONT - BASIC BLOCK TYPE FONT	1	KMEM
UA-50-0200			NFPA REQUIRED SCOTCH-LITE STRIPINGSTRIPING - TA AERIAL	1	KMEM
UA-50-0210			4" SCOTCH-LITE STRIPE ON CAB AND BODY - TA AERIAL	1	KMEM
UA-58-5100			WHITE SCOTCH-LITE	1	KMEM
UA-80-6000			REAR CHEVRON STRIPING	1	KMEM
UA-80-6002			50% VERTICAL SURFACE	1	KMEM
UA-80-6030			6" REAR SCOTCH-LITE CHEVRON STRIPING	1	KMEM
UA-80-6070			RUBY RED & LEMON YELLOW SCOTCH-LITE	1	KMEM
			****** PROPOSED - AERIAL WARRANTY PKG, W/PUMP @ REAR OF SPEC**	**1**	**KMEM**
W6-00-000J			PROPOSED - KME WARRANTY, STARTING ON DELIVERY DATE	1	KMEM
W6-00-0010	**X**	<	PROPOSED - 5 YEAR FCAM WARRANTY - CUSTOM CHASSIS	1	
			$19,500 per email Phil to Byron 9-27-16		
W6-00-003M		>	PROPOSED - 5 YEAR WARRANTY - BASE WITH CUSTOM CHASSIS	1	KMEM
W6-00-0163			PROPOSED - 10 YEAR CUMMINS ISX - EXTENDED WARRANTY	1	KMEM
W6-00-0210			PROPOSED - 5 YEAR ALLISON EVS TRANSMISSION WARRANTY	1	KMEM
W6-00-0220			PROPOSED - 3 YEAR COOLING SYSTEM WARRANTY - CUSTOM	1	KMEM
W6-00-0230			PROPOSED - LIFETIME FRAMERAIL WARRANTY	1	KMEM
W6-00-0242			PROPOSED - SHEPPARD STEERING GEAR STANDARD - THREE YEAR WARRANTY	1	KMEM
W6-00-0254			PROPOSED - 5 YEAR MERITOR FRONT AXLE - WARRANTY	1	KMEM
W6-00-0266			PROPOSED - 5 YEAR MERITOR 180 SERIES TANDEM AXLE REAR - WARRANTY	1	KMEM
W6-00-0270			PROPOSED - 3 YEAR MERITOR ABS - WARRANTY	1	KMEM
W6-00-0320		>	PROPOSED - 10 YEAR CAB STRUCTURAL WARRANTY	1	KMEM
W6-00-0330			PROPOSED - 10 YEAR BODY STRUCTURAL WARRANTY	1	KMEM
W6-00-0390			PROPOSED - 10 YEAR CAB & BODY CORROSION WARRANTY	1	KMEM
W6-00-0450			PROPOSED - PAINT FINISH WARRANTY, TEN (10) YEAR	1	KMEM
W6-00-0483			PROPOSED - 1 YEAR BRIGHTWORK WARRANTY	1	KMEM
W6-00-0490			PROPOSED - 10 YEAR STAINLESS STEEL PIPING WARRANTY	1	KMEM
W6-00-0550			PROPOSED - REAR SUSPENSION - RIDEWELL - AIR RIDE - 3 YEAR WARRANTY	1	KMEM
W6-00-0570			PROPOSED - SAFEGUARD TECHNOLOGY - 10 YEAR - RUNG COVERS	1	KMEM
W6-00-0610			PROPOSED - 20 YEAR AERIAL PLATFORM WARRANTY	1	KMEM
W6-00-0640		>	PROPOSED - FIVE (5) YEAR AERIAL WATERWAY SWIVEL WARRANTY	1	KMEM
W6-00-0655		>	PROPOSED - TEN 10 YEAR AERIAL WATERWAY WARRANTY	1	KMEM
W6-00-0670			PROPOSED - AERIAL DEVICE REPAIR POLICY AND LIABILITY DISCLAIMER	1	KMEM
W6-00-0695			PRO - AERIAL DEVICE HYDRAULIC COMPONENT WARRANTIES	1	KMEM
W6-00-0710			PROPOSED - LIFETIME POLY TANK WARRANTY - ALL TANKS	1	KMEM
W6-00-0820			PROPOSED - WATEROUS 5 YEAR PUMP WARRANTY (PARTS & LABOR)	1	KMEM
W6-00-0823	**X**		WATEROUS FCAM 5 YR WARRANTY CORRECTION	1	
W6-00-1153	**S**		DEALER PROVIDES WARRANTY TRANSPORT PROP and REQ	1	DLR
W6-00-1340			PROPOSED - AKRON HEAVY DUTY VALVE - 10 YEAR WARRANTY	1	KMEM

PART NO	S	DESCRIPTION	QTY	ID
W6-00-1530		PROPOSED - USSC SEATING 6 YEAR WARRANTY	1	KMEM
WA-00-0010		"AERIAL FIRE APPARATUS" NFPA 2016 STATEMENT OF EXCEPTIONS	1	KMEM

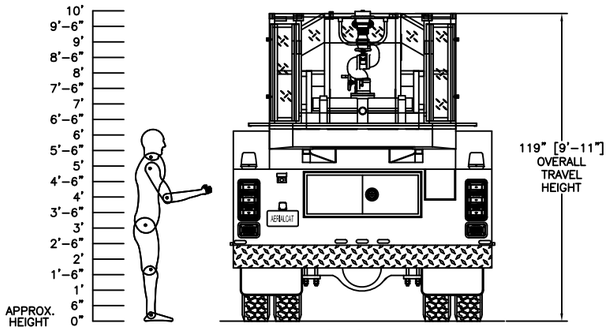

REAR VIEW

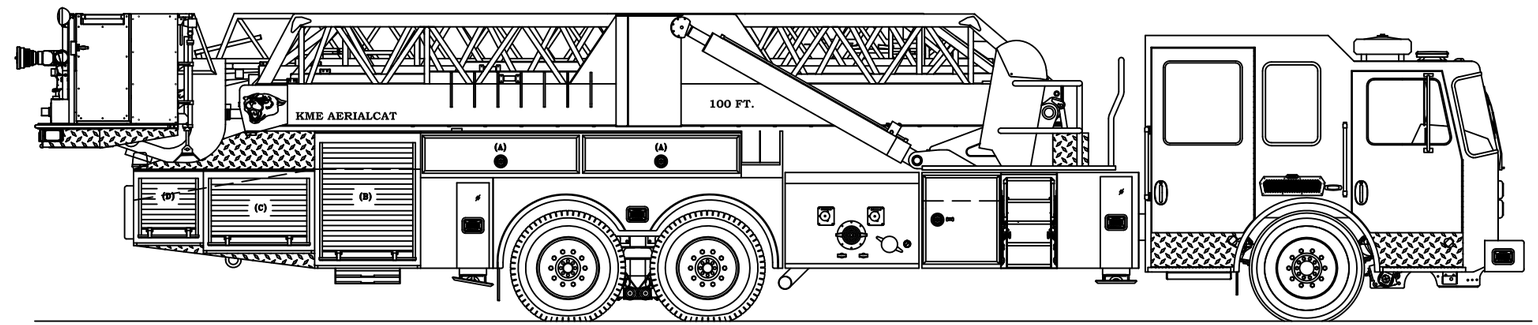

OFFICERS SIDE VIEW

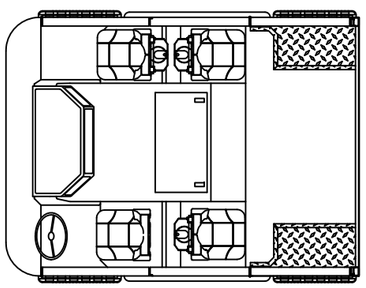

CAB INTERIOR LAYOUT

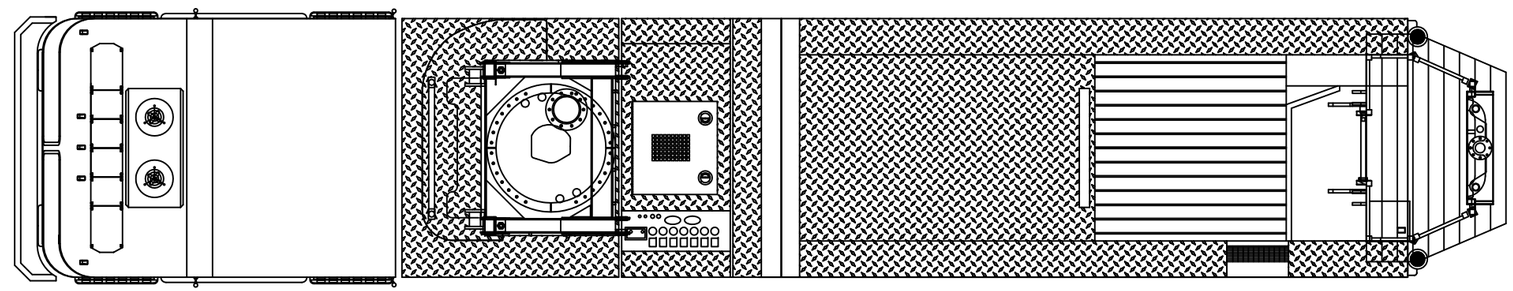

TOP VIEW

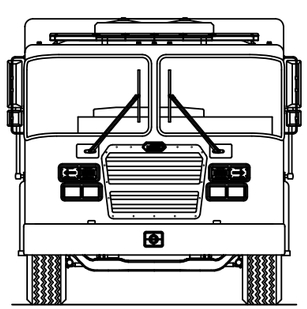

FRONT VIEW

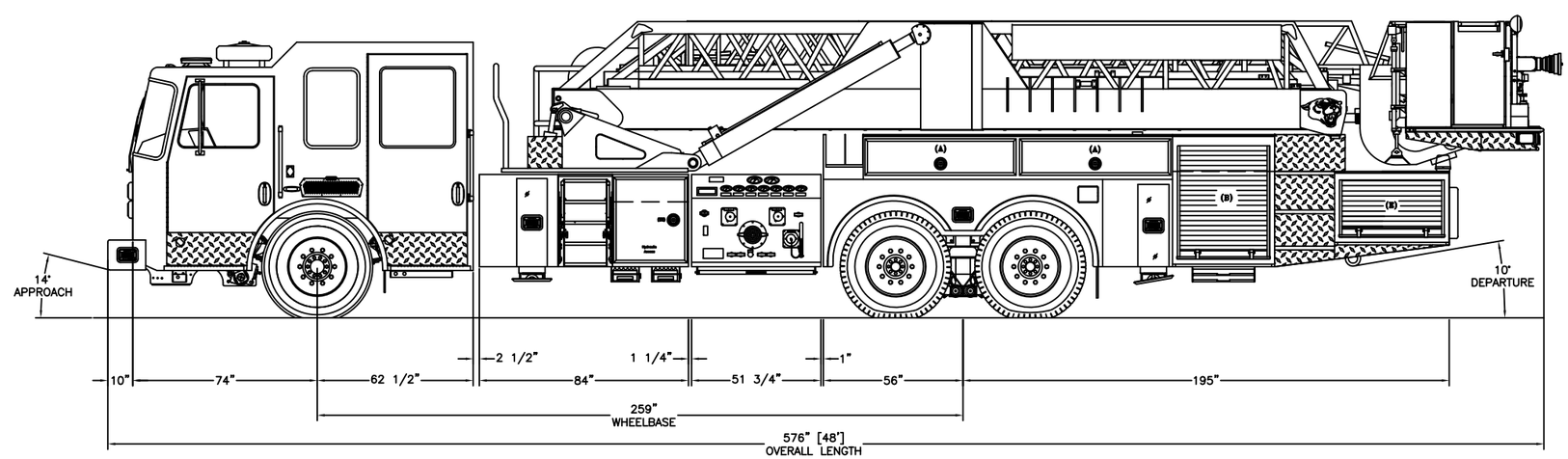

DRIVERS SIDE VIEW

CAB: 100"W PREDTAOR MFD 10" RAISED ROOF
ENGINE & TRANS. CUMMINS ISX12 400 HP/4000 EVS
AXLES: 23,000# FRONT/58,000# REAR
PUMP: WATEROUS S100 1,500 GPM SINGLE STAGE
WATER TANK: 300 GALLONS

THIS DRAWING IS A GENERAL CONFIGURATION AND MAY NOT NECESSARILY REFLECT ALL CONTRACTUAL REQUIREMENTS. CONTRACT SPECIFICATIONS SHALL PREVAIL OVER DRAWING.

CUSTOMER APPROVAL:

NAME:

TITLE:

DATE:

SYM	DATE	REVISION DESCRIPTION	APP'D

SALES ENGINEER : TBD

DIMENSIONS ARE APPROXIMATE & MAY VARY DUE TO BUILD ADJUSTMENTS

SCALE	DWG SIZE	DRAWN BY	Z.ZSCHUNKE	DATE
NONE	B	APPROVED BY	P.HOHERCHAK	9-26-16

100' MID-MOUNT PLATFORM

MAPC 6 BASIC QUINT

PROPOSAL DRAWING

KME
ONE INDUSTRIAL COMPLEX - NESQUEHONING, PA 18240

KME

FCAM SINGLE REAR AXLE

HIGH END REAR MOUNT

79 FOOT AERIAL LADDER

“QUINT”

MAPC 7

Quote SO

MAPC/FCAM

MAPC 7 HIGH END 79' REAR MOUNT PLATFORM

Sales Rep:

Terms:

Drawing #:
Est. Delivery Date: / /
Customer PO #:
Customer #:
QPF #:

Penalty:

Quote No: 10087-0015
10/04/2016

PART NO	S	DESCRIPTION	QTY	ID
		== REAR MOUNT LADDER - 713.016 07/13/16 ==	**1**	**KMEM**
		== LETTERING & STRIPING, 79' SA - 713.016 07/13/16 ==	**1**	**KMEM**
		== COMPARTMENT ACCESSORIES REARMOUNT AERIAL - 713.016 07/13/16 ==	**1**	**KMEM**
		== MISC AND LOOSE EQUIPMENT (AERIAL) - 713.016 07/13/16 ==	**1**	**KMEM**
		== AERIAL WARRANTY PACKAGE W/PUMP - 713.016 07/13/16 ==	**1**	**KMEM**
		DEALER ======= DEALER ======= DEALER	**1**	**DLR**
		QUOTE DATA VERSION: 0713.016 - 2016 DATA SET	**1**	**KMEM**
		INDEX OF PART NUMBERS	**1**	**KMEM**
		****** HEADER - CONTRACTS, PROPOSAL FORM, ETC @ FRONT OF SPECS**	**1**	**KMEM**
		****** PROPOSED - AERIAL SPEC BOILERPLATE**	**1**	**KMEM**
04-00-0000		PROPOSED - GENERAL INFORMATION - NFPA 1901	1	KMEM
04-00-0033		PROPOSED - COMPLETION INFO	1	KMEM
04-00-0040		PROPOSED - FMVSS CERTIFICATION	1	KMEM
04-00-0060		PROPOSED - RECORDS	1	KMEM
04-00-0107		PROPOSED - GENERAL CONSTRUCTION - AERIAL	1	KMEM
04-00-0120		PROPOSED - SINGLE LINE RESPONSIBILITY	1	KMEM
04-00-0130		PROPOSED - PRODUCT LIABILITY - $30,000,000.00	1	KMEM
04-00-0170		PROPOSED - CRITERIA & CODE CONFORMANCE - AERIAL	1	KMEM
04-00-0193		PROPOSED - PAINT PERFORMANCE CERTIFICATION	1	KMEM
04-00-0200		PROPOSED - AFTERMARKET SUPPORT WEBSITE	1	DLR
04-00-0490		PROPOSED - PRICES & PAYMENTS	1	KMEM
04-00-0540		PROPOSED - BOND REQUIREMENTS	1	KMEM
04-00-0560		PROPOSED - PERFORMANCE BOND	1	KMEM
04-00-0630		PROPOSED - MATERIAL & WORKMANSHIP	1	KMEM
04-00-0660		PROPOSED - CONTRACT SPECIALIST	1	KMEM
04-00-0680		PROPOSED - APPROVAL DRAWING	1	KMEM
04-00-1200		PROPOSED - DELIVERY	1	KMEM
04-00-1215		PROPOSED - INSTRUCTION MANUALS, TWO (2) SETS - CD	1	KMEM
04-00-1215	X	POWERPOINT DELIVERY - PROPOSAL FCAM AERIAL	1	
04-00-1300		PROPOSED - VEHICLE FLUIDS PLATE	1	KMEM
04-00-1500		PROPOSED - MANUFACTURE GENERATED EXACT BLUEPRINT WITH BID	1	KMEM
04-00-1521	X	PROPOSED - KME and BULLDOG FAMA MEMBERSHIP	1	

PART NO	S	DESCRIPTION	QTY	ID
04-00-1540		PROPOSED - MANUFACTURED IN THE UNITED STATES	1	KMEM
04-00-1550		PROPOSED - ISO 9001 QUALITY MANAGEMENT SYSTEM	1	KMEM
04-00-1570		PROPOSED - NFPA TREAD PLATE CERTIFICATION	1	KMEM
04-00-1605		PROPOSED - AMP DRAW REPORT	1	KMEM
04-00-2445		PROPOSED - UNDERWRITERS LABORATORIES (UL) TESTING - FCAM	1	DLR
07-00-0015		"AERIAL FIRE APPARATUS" NFPA 2016 CHAPTERS OF COMPLIANCE	1	KMEM
08-00-0000		VEHICLE DATA PLATE DESCRIPTION	1	KMEM
14-00-0000		NFPA ROLLOVER STABILITY GENERAL STATEMENT	1	KMEM
15-00-0010	>	PROPOSED - PRINCIPAL APPARATUS DIMENSIONS & GVWR	1	KMEM
15-00-0050		!!! CRITICAL OVERALL HEIGHT REQUIREMENT !!! - "NO"	1	KMEM
15-00-0150		!!! CRITICAL OVERALL LENGTH REQUIREMENT !!! - "NO"	1	KMEM
AA-00-002A		SERVICE CENTER - PROPOSAL FCAM	1	DLR
BA-00-0012		<1> 79-SA AERIALCAT LADDER	1	KMEM
BA-00-3000		SEAT AND SEAT BELT ANCHOR TESTING	1	KMEM
BA-02-0117		<2> PREDATOR - SINGLE AXLE - 79' RM	1	KMEM
BA-02-2007		<3> 138" TRAVEL HEIGHT - 79' SA	1	KMEM
BA-03-2020		<4> X-HI BODY, 79SA WITH PUMP	1	KMEM
BA-04-0505		AERIAL CHASSIS, REAR MOUNT PREDATOR -SINGLE AXLE (HEAVY)	1	KMEM
		****** HEADER - 100" PREDATOR CAB ******	**1**	**KMEM**
BA-04-0805		PREDATOR CAB - BASE, 100"	1	KMEM
BA-04-0850		PREDATOR CAB - BASE - ALUMINUM CONSTRUCTION	1	KMEM
BA-04-0990		PREDATOR 100" - CRASH TESTING	1	KMEM
BA-04-0995		PREDATOR 100" - 120,000# ROOF & SIDE TESTING	1	KMEM
BA-04-1300		PREDATOR 100" - MFD CAB LENGTH (DIM - 62 1/2")	1	KMEM
BA-04-1900		PREDATOR 100" - VISTA DIMENSIONS FRONT SEATING & ENGINE ENCLOSURE	1	KMEM
BA-04-4510		2010 - RM 10" RAISED ROOF 4" CENTER NOTCH & 2" WATERWAY NOTCH	1	KMEM
BA-05-0265		BATTERY ACCESS DOOR - REAR STEP WELL, DRIVER SIDE	1	KMEM
BA-05-0610		BARRIER HEIGHT CAB DOORS, 100" PREDATOR "MFD, LFD & X-LFD"	1	KMEM
BA-05-0650		CAST ANTI-SLIP ENTRY STEPS FOR REDUCED LENGTH CAB DOORS	1	KMEM
BA-05-0700		CAB DOORS - BOLT ON WEATHER STRIP	1	KMEM
BA-05-1015		PREDATOR DOOR LATCHES, HD LOOP STYLE LATCH - BARRIER HEIGHT DOORS	1	KMEM
BA-05-1035		LOCKING CAB DOOR , OUT + IN, LOOP STYLE LATCH	1	KMEM
BA-05-1037		KEY MODEL #2001	1	KMEM
BA-05-1103		WINDOWS, MANUAL HAND CRANK STYLE - 100"	1	KMEM
BA-05-1130		DOOR WINDOW TRIM EXTRUSION, 4 - DOOR	1	KMEM
BA-05-1325		FULL HEIGHT INTERIOR DOOR PANELS - BRUSH ALUM, 4 - DOOR	1	KMEM
BA-05-1510		SCOTCHLITE MATERIAL ON INTERIOR OF DOOR PANEL 4-DOORS	1	KMEM
		****** HEADER - CAB EXTERIOR ACCESSORIES & OPT, 100" PREDATOR**	**1**	**KMEM**
BA-05-2410		WINDSHIELD, 100" PREDATOR CAB	1	KMEM
BA-05-2425		WINDSHIELD WIPERS & WASHERS - 100" PREDATOR	1	KMEM
BA-05-2450		SIDE VIEWING WINDOWS NON-SLIDING - PREDATOR	1	KMEM
BA-05-2500		DARK TINT WINDOWS, SIDE VIEWING, REAR DOORS & REAR WALL	1	KMEM
BA-05-2600		GRAB RAILS EXTERIOR, KNURLED ALUMINUM EXTRUSION	1	KMEM
BA-05-2668		PREDATOR INTERIOR GRAB HANDLES - WHEELABRATED	1	KMEM
BA-05-2692		INTERIOR "A" POST GRAB HANDLE "PREDATOR" - WHEELABRATED	1	KMEM
BA-05-2715		FRONT CAB GRILLE - FORMED STAINESS STEEL MIRROR FINISHED - 100" PREDATOR	1	KMEM
BA-05-2780		FRONT CAB GRILLE SCREEN - BLACK MESH - 100" PREDATOR/PANTHER	1	KMEM
BA-05-2815		SIDE CAB GRILLES - SHAPED BRIGHT FINISHED - 100" PREDATOR	1	KMEM
BA-05-2900		ALUMINUM CAB WHEEL LINERS	1	KMEM
BA-05-2910		ALUMINUM CAB FENDERETTES	1	KMEM
BA-05-3000		FRONT MUD FLAPS	1	KMEM
BA-05-3500		VELVAC MIRRORS " WEST COAST" HEATED / REMOTE - W/CONVEX SPOT	1	KMEM
BA-05-3690		MIRROR CONTROL IN MULTIPLEX CONTROL SCREEN	1	KMEM
BA-05-5115		INTERIOR TRIM, 100" PREDATOR	1	KMEM
BA-05-5180		CUSTOM CAB INTERIOR PAINT - TEXTURED GRAY	1	KMEM
BA-05-5200		PREDATOR REAR INTERIOR CAB WALL, GRAY DURAWEAR UPHOLSTERY	1	KMEM
BA-05-5335		TREAD PLATE KICK PLATE ON LOWER INTERIOR REAR WALL	1	KMEM

PART NO	S	DESCRIPTION	QTY	ID
BA-05-5530	>	STORAGE COMPARTMENTS UNDER FRONT SEATS - 100" PREDATOR	1	KMEM
BA-05-5610		BARYFOL FLOORING	1	KMEM
BA-05-5650		1" ACOUSTICAL INSULATION	1	KMEM
BA-05-5824		ENGINE ENCLOSURE 100" PREDATOR FAB DASH (DURAWEAR)	1	KMEM
BA-05-5860		ENGINE ENCLOSURE MATERIAL - ALUMINUM CAB	1	KMEM
BA-05-5890		REDUCED LENGTH ENGINE ENCLOSURE	1	KMEM
BA-05-7040		SUN VISORS, 100" PREDATOR CAB, PADDED VINYL	1	KMEM
BA-06-0500	>	TOP ROLLOVER PROTECTION SYSTEM W/SLAVE SENSOR - FIVE (5) OR MORE SEATS	1	KMEM
		****** HEADER - CAB SEATING & ACCESSORIES, 100" - PREDATOR MFD**	**1**	**KMEM**
		****** SEATING OPTIONS USSC, 100" - PREDATOR - MFD - ROLLTEK**	**1**	**KMEM**
BA-06-329J		DRIVERS SEAT, USSC AIR SUSPENSION, ABTS - SIDE CURTAIN AIRBAG	1	KMEM
BA-06-389Z		OFFICERS SEAT, USSC - FIXED BASE BUCKET, ABTS - SIDE CURTAIN AIRBAG	1	KMEM
BA-06-3999		USSC - HORIZONTAL SLIDE ADJUSTMENT - OFFICERS SEAT	1	KMEM
		MFD CAB - REAR FACING USSC SEATS - ROLLTEK	**1**	**KMEM**
BA-06-414M		USSC SCBA ABTS REAR FACING, OUTBOARD, DS - SIDE CURTAIN AIRBAG	1	KMEM
BA-06-4180		ZICO ULLH SCBA BOTTLE BRACKET - OUTBOARD, DS	1	KMEM
BA-06-424M		USSC SCBA ABTS REAR FACING,OUTBOARD, OS - SIDE CURTAIN AIRBAG	1	KMEM
BA-06-4280		ZICO ULLH SCBA BOTTLE BRACKET - OUTBOARD, OS	1	KMEM
		MFD CAB - FORWARD FACING USSC SEATS - ROLLTEK	**1**	**KMEM**
BA-06-7200		**** DELETE FORWARD FACING SEAT RISER - NOT REQUIRED	1	KMEM
BA-06-8055		NO SCBA PARADE COVERS SUPPLIED	1	KMEM
BA-06-8150		USSC SEATING MATERIAL - BLACK CORDURA	1	KMEM
		****** HEADER - VEHICLE DATA RECORDER SYSTEMS**	**1**	**KMEM**
BA-06-9103	>	CLASS ONE SEAT BELT WARNING SYSTEM - UP TO 6 POSITIONS - ULTRAVIEW DISP	1	KMEM
BA-06-9115		FOUR (4) SEATING POSITIONS	1	KMEM
BA-06-9250	>	HELMET HOLDERS - IN CAB - ZICO	4	KMEM
BA-06-9310		CLASS ONE VEHICLE DATA RECORDER - MULTIPLEX	1	KMEM
		****** HEADER - CAB INTERIOR ACCESSORIES & OPTIONS, 100" PREDATOR**	**1**	**KMEM**
BA-07-7010	>	STANDARD #MATM RADIO ANTENNA INSTALLED	1	KMEM
		****** HEADER - INSTRUMENTATION & CONTROLS, 100" PREDATOR - NARROW VISTA**	**1**	**KMEM**
BA-08-0214		DASH & CENTER CONSOLE - 100" PREDATOR FAB DASH (UPHOLSTERED)	1	KMEM
BA-08-0275		INSTRUMENT PANEL, 100" PREDATOR - NARROW	1	KMEM
BA-08-0315		DIESEL EXHAUST FLUID LEVEL GAUGE	1	KMEM
BA-08-0320		ENGINE COMPRESSION BRAKE CONTROLS	1	KMEM
BA-08-0640		ULTRAVIEW 700 DISPLAY ON CAB DASH FOR ES-KEY SYSTEM	1	KMEM
BA-08-1220		INDICATOR CLUSTER, 100" PREDATOR	1	KMEM
BA-08-1235		"ATC DISABLED" INDICATOR CLUSTER	1	KMEM
BA-08-1240		"ATC ACTIVE" INDICATOR CLUSTER	1	KMEM
BA-08-1265		"OUTRIGGERS NOT STOWED" INDICATOR ON DASH	1	KMEM
BA-08-1800		LOWER RIGHT AUXILIARY SWITCH PANEL - PREDATOR - FAB	1	KMEM
BA-08-1900		PUMP SHIFT CONTROL ON LOWER LEFT DASH PANEL	1	KMEM
BA-08-1950		MULTIPLEX CONTROL PUMP SHIFT SWITCH - MULTIPLEX	1	KMEM
BA-08-2000		AERIAL LADDER, LADDER POWER/PTO SWITCHES IN CAB	1	KMEM
BA-08-2750		PREDATOR COMPUTER TERMINAL IN FRONT OF OFFICER (FABRICATED)	1	KMEM
BA-08-2905		OVERHEAD ABS PANEL, FLAT FACED, 100" PREDATOR	1	KMEM
BA-08-4405		RM HEATER/ DEFROSTER & ACCESS, PREDATOR 10" RR W/TWO NOTCH	1	KMEM
BA-08-6900		HVAC CONTROL SYSTEM - INCOPORATED INTO MULTIPLEX CONTROL DISPLAY	1	KMEM
BA-08-9000		CAB TILT SYSTEM & OPTIONS	1	KMEM
BA-08-9010	>	AUXILIARY - MANUAL CAB LIFT BACKUP SYSTEM	1	KMEM
BA-08-9110		PARKING BRAKE/CAB TILT INTERLOCK	1	KMEM
		FRAME & AXLE PACKAGE, SINGLE AXLE CHASSIS (HEAVY)	**1**	**KMEM**
BA-09-5100	>	110,000 PSI FRAME: STD MAIN RAIL WITH FULL LENGTH LINER	1	KMEM
		HEADER - FRONT BUMPER, EXTENSIONS & ACCESSORIES	**1**	**KMEM**
BA-10-0050	>	BUMPER 12" STAINLESS STEEL CONTOUR - ALL CABS	1	KMEM
BA-10-0097		**** REQ 10" EXT MIN, MECH SIREN SEMI RECES. IN BUMPER, CENTER ****	1	KMEM

PART NO	S	DESCRIPTION	QTY	ID
BA-10-0110		10" FRONT BUMPER EXTENSION WITH TREAD PLATE GRAVEL SHIELD	1	KMEM
BA-10-0405		TREADPLATE GRAVEL SHIELD STANDARD INSTALLATION	1	KMEM
BA-10-2010		TWO (2) PAINTED TOW HOOKS BELOW FRONT BUMPER	1	KMEM
BA-10-5000		AERIAL TRAVEL SUPPORT FOR ANY REAR MOUNT TYPE AERIAL	1	KMEM
BA-14-0170		23,000# FRONT AXLE MERITOR MFS-20-133A-N	1	KMEM
BA-14-1110		MERITOR, EX-225 17" DISC BRAKES, FRONT AXLE, W/ AUTO SLACK ADJUSTMENT	1	KMEM
BA-14-2040		SUSPENSION FRONT - 23,000# AXLES	1	KMEM
BA-14-2095		**AERIAL DEVICE TRAVEL HEIGHT CRITICAL!!!! ** REQUIRES SMALL AXLE SPACER	1	KMEM
BA-14-2110		FRONT AXLE SHOCK ABSORBERS - MONROE "MAGNUM - 70"	1	KMEM
BA-14-5150		33,500# REAR AXLE MERITOR RS-30-185	1	KMEM
BA-14-6515		16.5" X 8.6" S-CAM BRAKES - MERITOR REAR AXLE, W/ AUTO SLACK	1	KMEM
BA-15-2810		VEHICLE TOP SPEED - 2016 NFPA STATEMENT	1	KMEM
BA-15-4435	>	SPRING REAR SUSPENSION, SINGLE REAR AXLE (33,500#)	1	KMEM
BA-15-4900	>	REAR SHOCK ABSORBERS - MONROE "MAGNUM" SERIES	1	KMEM
		****** HEADER - BRAKE SYSTEM, SINGLE AXLE VEHICLE**	**1**	**KMEM**
BA-20-1000		BRAKE SYSTEM, SA CHASSIS	1	KMEM
BA-20-1100		ABS BRAKING FOR SINGLE REAR AXLE CHASSIS	1	KMEM
BA-20-1270	>	ELECTRONIC STABILITY CONTROL (ESC) WITH (ATC) - CUSTOM SA	1	KMEM
BA-20-1500		AIR RESERVOIRS 4700 CU IN SA, BASE	1	KMEM
BA-20-1800		STAINLESS STEEL AIR TANK BRACKETS - (3 TANKS)	1	KMEM
BA-20-2025		1/4 TURN DRAIN VALVES ON ALL AIR TANKS	1	KMEM
BA-20-3000		AIR DRYER, HEATED - BENDIX AD-9 12VOLT	1	KMEM
BA-20-5000		COLOR CODED SYNFLEX BRAKE LINES W/QUICK RELEASE FITTINGS - SA	1	KMEM
BA-20-5500		AIR COMPRESSOR -WABCO 18.7 CFM- STD. FOR ALL CUMMINS ENGINES	1	KMEM
BA-20-5810		BRAKE TREADLE VALVE	1	KMEM
BA-20-6010		PARKING BRAKE CONTROL - NEAR DRIVER - ALL WHEEL LOCK	1	KMEM
		HEADER, TIRE AND WHEEL OPTIONS	**1**	**KMEM**
		HEADER, WHEELS, 23,000 FRONT AXLE - ALUMINUM	**1**	**KMEM**
BA-25-1040		FRONT WHEELS, POLISHED ALUMINUM, 22.5 X 13, 24,390#	1	KMEM
BA-25-1045		FRONT WHEELS, LUG AND HUB TRIM (ALUMINUM WHEELS)	1	KMEM
BA-25-2030	>	FRONT, GOODYEAR 425/65R22.5 L 24,400# G296 MSA MIXED - 68MPH	1	KMEM
BA-25-2400		GOODYEAR - FIRE SERVICE RATING - TIRE RESTRICTIONS	1	KMEM
		HEADER, TIRES & WHEELS, 33,000 - 33,500 SINGLE REAR AXLE	**1**	**KMEM**
BA-25-5080		REAR WHEELS, POLISHED ALUMINUM, 22.5 X 9, SA	1	KMEM
BA-25-5110		REAR WHEELS, LUG AND HUB TRIM, SA (ALUMINUM)	1	KMEM
BA-25-6080	>	REAR, GDYR 315/80R22.5 L 35,400# G291 HIGHWAY - 68MPH, SA	1	KMEM
BA-25-7400		GOODYEAR - FIRE SERVICE RATING - TIRE RESTRICTIONS	1	KMEM
BA-25-9900		TIRE PRESSURE MONITORING - LED VALVE STEM CAPS - SIX TIRES	1	KMEM
		100" PREDATOR - ENGINE PACKAGE, SINGLE AXLE CHASSIS	**1**	**KMEM**
		****** 100" - HEADER, ENGINE & ENGINE COMPONENTS**	**1**	**KMEM**
BA-30-3140	>	CUMMINS ISL9 450 HP @ 2100 RPM, TQ 1250 lb-ft @ 1400 - PREDATOR NARROW	1	KMEM
BA-30-9810		PROPOSED - ENGINE CERTIFICATION CUSTOM CHASSIS	1	KMEM
BA-32-0035		COOLING/RADIATOR, 100" PREDATOR - NARROW	1	KMEM
BA-32-0070		ENGINE COOLANT FILTER - CUMMINS ISC - ISX	1	KMEM
BA-32-0085		COOLING SYSTEM CRITERIA	1	KMEM
BA-32-0100		TRANSMISSION COOLER	1	KMEM
BA-32-0120		RADIATOR SKID PLATE	1	KMEM
BA-32-0160		CHARGED AIR COOLER (FRONT MOUNT)	1	KMEM
BA-32-0240		COOLANT FAN, W/CLUTCH - CUMMINS ISC/ISL	1	KMEM
BA-32-0340		HEATER AND COOLANT HOSES/PIPING	1	KMEM
BA-32-0420		LOW COOLANT INDICATOR LIGHT AND ALARM IN CAB	1	KMEM
BA-33-0020	>	SECONDARY BRAKING - ENGINE COMPRESSION BRAKE	1	KMEM
BA-33-0150		FAST IDLE CONTROL FOR ALL ELECTRONIC ENGINES - SMART WHEEL	1	KMEM
BA-33-0160		ENGINE AIR CLEANER	1	KMEM
BA-33-0180		SPARK ARRESTOR	1	KMEM
BA-33-0200		ACCELERATOR PEDAL - FLOOR MOUNT	1	KMEM
BA-33-0250		REMOTE THROTTLE & INTERLOCK HARNESS	1	KMEM

PART NO	S	DESCRIPTION	QTY	ID
BA-40-0100		ALLISON 3000EVS TRANS. - COMPRESSION BRAKE	1	KMEM
BA-40-0650		FIVE (5) SPEED AUTOMATIC TRANSMISSION - 3000 SERIES	1	KMEM
BA-40-0700		ALLISON TRANSMISSIONS, ELECTRONIC TOUCH PAD SHIFTER IN CAB	1	KMEM
BA-40-0855		TRANSMISSION OIL LEVEL SENSOR	1	KMEM
BA-40-0860		ALLISON PARK TO NEUTRAL	1	KMEM
BA-40-0910		ALLISON PRESELECT PROGRAMMING	1	KMEM
BA-40-0920		PRESELECT PROGRAMMED FOR 4TH GEAR	1	KMEM
BA-40-4710		TES-389 TRANS FLUID 3000EVS TRANSMISSION	1	KMEM
BA-45-0100		DRIVE LINES DANA-SPICER #1710 SERIES	1	KMEM
BA-49-0100		DIESEL EXHAUST FLUID TANK - 5 GALLON	1	KMEM
BA-50-0110		EXHAUST SYSTEM - DPF & SCR SYSTEM - INLINE SYSTEM	1	KMEM
BA-50-0155		ALUMINIZED STEEL EXHAUST TAILPIPE/OUTLET OS - DPF + SCR SYSTEM	1	KMEM
BA-50-2500		FUEL SYSTEM	1	KMEM
BA-50-2505		FUEL TANK - 50 GALLON, STEEL	1	KMEM
BA-50-2600		STAINLESS STEEL FUEL TANK STRAPS IN LIEU OF STEEL	1	KMEM
BA-50-2625		FUEL LINES - FIBER REINFORCED HOSE	1	KMEM
BA-50-2635		FUEL LINE SHUT-OFF VALVE	1	KMEM
BA-50-2645	>	CUMMINS FUEL-WATER SEPARATOR	1	KMEM
BA-50-2670		FUEL PUMP SECONDARY ELECTRIC, REQ. ON 210" W-B OR LONGER	1	KMEM
BA-50-2700		FUEL POCKET, LEFT SIDE REAR WHEEL WELL PANEL	1	KMEM
BA-50-5050	>	STEERING - DUAL SHEPPARD POWER STEERING GEARS	1	KMEM
BA-50-7115		STEERING COLUMN - CLOCK SPRING "NARROW"	1	KMEM
BA-50-7155		18" STEERING WHEEL - 4 SPOKE - "NARROW"	1	KMEM
BA-50-7170		SMART WHEEL CONTROLS ON STEERING WHEEL	1	KMEM
BA-50-9000		ROAD SAFETY KITS	1	KMEM
		****** HEADER, RM LADDER CHASSIS ELECTRICAL, 100" PREDATOR (OPTIONS)**	**1**	**KMEM**
		****** HEADER, RM LADDER W/ PUMP BODY ELECTRICAL (OPTIONS)**	**1**	**KMEM**
BE-01-0005		PREDATOR CHASSIS ELECTRICAL SYSTEM DESCRIPTION	1	KMEM
BE-01-0105		PREDATOR CHASSIS WIRING INSTALLATION	1	KMEM
BE-01-0150		DIRECT BATTERY GROUNDING STRAP - PREDATOR	1	KMEM
BE-01-0153		EMI/RFI PROTECTION	1	KMEM
BE-01-0205		PREDATOR 12 VOLT ELECTRICAL SYSTEM TESTING	1	KMEM
BE-05-0353		CLASS-1 ES-KEY MULTI-PLEXED ELECTRICAL SYSTEM 100" PREDATOR	1	KMEM
BE-05-0460		CLASS-1 ES-KEY ULTRAVIEW 700 DISPLAY	1	KMEM
BE-05-0800		INTER-LOCK MODULE FOR MULTIPLEX SYSTEM	1	KMEM
BE-05-0810		WELDON SWIVEL MOUNTING BRACKET FOR CONTROL SCREEN	1	KMEM
BE-05-0900		CHASSIS DIAGNOSTICS SYSTEM	1	KMEM
BE-05-1160		VOLTAGE MONITORING SYSTEM - 12 VOLT	1	KMEM
BE-05-1165		INDICATOR LIGHT AND ALARM PROVE-OUT SYSTEM	1	KMEM
BE-05-1170		SEQUENCER	1	KMEM
BE-05-1175		ELECTRICAL HARNESS INSTALLATION - 12 VOLT	1	KMEM
BE-10-0487		DELCO REMY 40SI, 320 AMP BRUSHLESS ALTERNATOR	1	KMEM
BE-15-0730		BATTERIES - SIX (6) EXIDE GROUP 31, 925CCA	1	KMEM
BE-15-1105		PREDATOR BATTERY STORAGE, STEEL, MFD, XMFD, LFD, XLFD	1	KMEM
BE-15-1500		BATTERY DISCONNECT SWITCH, ALL UNITS	1	KMEM
BE-15-1555		COLE HERSEE BATTERY JUMPER STUDS, DS BATTERY BOX	1	KMEM
BE-20-1635		120 VOLT 20 AMP SUPER AUTO EJECT FOR BATT CHARGER - CUSTOM	1	KMEM
BE-20-1715		SHORELINE RECEPTACLE LABEL - NFPA	1	KMEM
BE-20-1720		RED COVER FOR KUSSMAUL AUTO-EJECT RECEPTACLE, #091-55RD	1	KMEM
BE-20-1750		SHORELINE LOCATION - ADJACENT TO DRIVER'S DOOR	1	KMEM
BE-20-2000		KUSSMAUL MODEL 1200, 40AMP, BATTERY CHARGER	1	KMEM
BE-30-2750		CONTROL SWITCHING THROUGH MULTIPLEX TOUCH SCREENS	1	KMEM
BF-00-0515		WELDON #8080-8000-13 WHITE/RED LED INTERIOR LIGHTS (4)	1	KMEM
BF-00-5000		DOOR OPEN INDICATOR W/ INTEGRAL AUDIBLE ALARM	1	KMEM
		****** HEADER, 12V POWER/ USB CHARGING/ POWER - GROUND CIRCUITS, CUSTOM ******	**1**	**KMEM**
BF-01-6000		12 VOLT POWER AND GROUND CIRCUIT FOR ACCESSORIES IN DASH	1	KMEM
		****** HEADER, REAR/SIDE VISION CAMERA SYSTEMS ******	**1**	**KMEM**
BF-20-0000		DUAL HEADLIGHTS, HALOGEN, PREDATOR - DUAL BEZELS	1	KMEM

PART NO	S	DESCRIPTION	QTY	ID
BF-20-0320		DAYTIME RUNNING LIGHTS, ALL CABS	1	KMEM
BG-00-0055		DUAL MODULE w/ CODE 3 65STA LED TURN SIGNAL & REQ WARN LIGHT	1	KMEM
BG-00-0400		CUST RM LADDER CHASSIS LED MARKER LIGHTS	1	KMEM
BG-00-0500		CUST RM LADDER BODY LED MARKER LIGHTS	1	KMEM
BG-00-1210		WELDON #9186 LED MARKER LIGHTS @ FRONT ROOF EDGE OF CAB	1	KMEM
BG-00-1600		TRUCK-LITE MARKER LIGHTS @ EA SIDE OF CAB, ADJACENT TO DRIVER DOOR	1	KMEM
BG-00-1610		TRUCK-LITE MARKER/TURN LIGHTS @ EA SIDE OF BODY	1	KMEM
BG-00-1660		TRUCK-LITE MARKER LIGHTS @ REAR OF BODY	1	KMEM
BG-00-1800		TRUCK-LITE DOT AMBER REFLECTORS @ SIDE OF BODY	1	KMEM
BG-00-1810		TRUCK-LITE DOT RED REFLECTORS @ REAR OF BODY	1	KMEM
BG-00-2915		TECNIQ #L10 LED LICENSE PLATE LIGHT @ DS REAR OF BODY	1	KMEM
BG-02-2530		CODE 3, #65 LED BRAKE, REVERSE, & TURN W/ TRI HOUSING	1	KMEM
BH-04-1050		CAB STEP LIGHTS, TECNIQ EON 3 LED, ALL DEVICES	4	KMEM
BH-04-1130		BODY STEP LIGHTS, TECNIQ EON 3 LED, ALL DEVICES	4	KMEM
BH-05-1625		DUNNAGE AREA LIGHTING, TECNIQ EON 3 LED	1	KMEM
BH-05-2300		AERIAL ACCESS LADDER ILLUMINATION - WHELEN 3" LED - RM BODY	1	KMEM
	>	****** HEADER, HOSE BED LIGHTING ******	**1**	**KMEM**
BH-06-0100		UNITY HOSE BED LIGHTS, ALL DEVICES	1	KMEM
BH-06-2200		HOSE BED WORK LIGHT - SWITCH	1	KMEM
		****** HEADER, SCENE LIGHTS - CUSTOM CHASSIS ******	**1**	**KMEM**
		****** HEADER, SCENE LIGHTS - LADDER/PLATFORM W/ PUMP**	**1**	**KMEM**
BH-11-0500		NFPA (4) JW SPEAKER LED RECTANGLE GROUND LIGHTS, BELOW CAB DOORS	1	KMEM
BH-11-0540		GROUND LIGHTS, 2 LED UNDER FRONT BUMPER FACING FORWARD - RH	1	KMEM
BH-11-0560		GROUND LIGHTS, 2 LED BELOW PUMP PANEL RUNNING BOARD - RH	1	KMEM
BH-11-0585		GROUND LIGHTS, 2 LED, AT REAR BODY CORNERS - RH	1	KMEM
BH-11-3750		CAB AND BODY GROUND LIGHTS ACTIVATE WITH PARKING BRAKE	1	KMEM
BH-11-3765		CAB AND BODY GROUND LIGHTS - SWITCH @ IN CAB	1	KMEM
		****** HEADER, BROW AND CAB RADIUS LIGHTS - CUSTOM CHASSIS**	**1**	**KMEM**
		****** HEADER, TELESCOPING LIGHTS, REAR OF CAB - CUSTOM CHASSIS**	**1**	**KMEM**
BH-12-2200		FRC BROW LIGHT, SPECTRA LED, 155W12V, (1) ABOVE WINDSHIELD	1	KMEM
BH-14-0020		CONTROL SWITCH IN CAB FOR LIGHT(S) ABOVE WINDSHIELD	1	KMEM
BI-00-0200		AERIAL BODY ELECTRICAL SYSTEM	1	KMEM
BI-00-0205		AERIAL BODY ELECTRICAL JUNCTION COMPARTMENT	1	KMEM
BI-00-0210		REAR-MOUNT, AERIAL DEVICE ELECTRICAL JUNCTION COMPARTMENT	1	KMEM
BI-00-0525		BODY ELECTRICAL HARNESS - ES-KEY	1	KMEM
BJ-00-5115		PUMP ENCLOSURE WORK LIGHTS - TECNIQ LED	1	KMEM
BJ-00-5165		ENGINE COMPARTMENT WORK LIGHTS - TECNIQ LED	1	KMEM
		COMPARTMENT LIGHTS - AERIAL SINGLE AXLE	**1**	**KMEM**
BJ-02-1055	>	COMPT. LIGHTS, TECNIQ E18 LED	7	KMEM
		****** HEADER, 12V BODY FLOOD LIGHTING - RM LAD/PLAT/WT W/ PUMP ******	**1**	**KMEM**
		****** CUSTOM REAR MOUNT AERIAL NFPA WARNING LIGHT PACKAGE**	**1**	**KMEM**
BL-95-0000		NFPA COMPLIANT WARNING LIGHT PACKAGE - ALL UNITS	1	KMEM
BL-95-0100		LIGHT PACKAGE ACTUATION/CONTROLS - ALL UNITS	1	KMEM
BL-98-0000		WARNING LIGHT FLASH PATTERN - NFPA FLASH PATTERN	1	KMEM
BM-00-0200		CODE 3 UPPER PACKAGE - CUSTOM REAR MOUNT AERIAL	1	KMEM
BM-01-0505	>	LIGHTBAR RISER FOR SCENE LIGHT CLEARANCE	1	KMEM
BM-02-0090		A-UPPER, CODE 3 LED DF23ANFPA1, DEFENDER 23" TRICORE BAR, PAIR	1	KMEM
BM-02-1040		C-UPPER, CODE 3 LED 10" PRIZM II, DUOBEAM II - RED LENS	1	KMEM
BM-02-2000		B/D-UPPER REAR, COVERED BY LIGHTS IN ZONE C-UPPER	1	KMEM
BM-02-3000		B/D-UPPER FRONT, COVERED BY LIGHTS IN ZONE A-UPPER	1	KMEM
BM-07-0200		CODE 3 LOWER PACKAGE - CUSTOM REAR MOUNT AERIAL	1	KMEM
BM-09-0018	>	A-LOWER FRONT, CODE 3 65 SERIES LED	1	KMEM
BM-09-0098		A-LOWER FRONT MOUNTING, CUSTOM CHASSIS	1	KMEM
BM-09-1014	>	C-LOWER REAR, CODE 3 65 SERIES LED	1	KMEM
BM-09-2006	>	B/D-LOWER FRONT, CODE 3 65 SERIES LED	1	KMEM
BM-09-2098		B/D-LOWER FRONT MOUNTING, CUSTOM CHASSIS	1	KMEM
BM-09-3006	>	B/D-LOWER MID, CODE 3 65 SERIES LED	1	KMEM
BM-09-3506	>	B/D-LOWER SECONDARY MID, CODE 3 65 SERIES LED	1	KMEM

PART NO	S	DESCRIPTION	QTY	ID
BM-09-4006	>	B/D-LOWER REAR, CODE 3 65 SERIES LED	1	KMEM
BM-15-0000		LIGHT PACKAGE NFPA CERTIFICATION - ALL UNITS	1	KMEM
		****** HEADER, OPTIONAL WARNING LIGHTS**	**1**	**KMEM**
		****** HEADER, AUDIBLE WARNING & COMMUNICATION EQUIPMENT**	**1**	**KMEM**
BW-00-0510		CHASSIS SINGLE ELECTRIC (DOT) HORN	1	KMEM
BW-00-0560		CODE 3, #CA278, BACK-UP ALARM - 87DBA	1	KMEM
BW-00-5000	>	DUAL CHROME AIR HORNS	1	KMEM
BW-00-5100		DUAL AIR HORNS RECESSED IN FRONT BUMPER, STD	1	KMEM
BW-00-5200		AIR HORN CTRL - FOOT FOR OFFICER & STEERING WHEEL FOR DRIVER	1	KMEM
BW-01-0120		SIREN, WHELEN # 295HFS2, 100W - FLUSH MOUNT	1	KMEM
BW-01-1020		ONE (1) WHELEN SA315P SPEAKER	1	KMEM
BW-02-0000	>	FEDERAL Q2B SIREN @ CAB FRONT	1	KMEM
BW-02-0035		Q2B MOUNT - SEMI-RECESSED INTO CENTER OF BUMPER	1	KMEM
BW-02-2000		SIREN CONTROL - FLOOR SWITCH, DRIVER AND OFFICER	1	KMEM
		****** HEADER, PUMP, TANK & ACCESSORIES, 79' SA RM, X-HI-BODY**	**1**	**KMEM**
DC-00-2345		WATEROUS CSU-C20-2000 SINGLE STAGE PUMP	1	KMEM
DC-01-4600		WATEROUS PUMP PACKING	1	KMEM
DC-01-6210		WATEROUS "C20" PUMP DRIVE UNIT, ALL WATEROUS MID-SHIP PUMPS	1	KMEM
DC-01-6490		PUMP RATIO (HALE, WATEROUS OR DARLEY)	1	KMEM
DC-01-7140		WATEROUS AIR SHIFT	1	KMEM
DC-01-8590		PUMP SHIFT MANUAL OVERRIDE (HALE, WATEROUS OR DARLEY)	1	KMEM
DC-01-8615		WATEROUS PUMP SHIFT INDICATOR LIGHTS	1	KMEM
DC-01-9020		TRANSMISSION LOCK-UP (HALE, WATEROUS OR DARLEY)	1	KMEM
DC-02-1900		PUMP MOUNTS - MID-SHIP PUMPS	1	KMEM
DC-02-1990		PUMP INSTALLATION - CUSTOM	1	KMEM
		****** HEADER, WATEROUS CSU, CMU, PRESSURE CONTROL**	**1**	**KMEM**
DC-05-1226		FIRE RESEARCH "IN CONTROL" TGA-400 PRESSURE GOVERNOR	1	KMEM
DC-05-1295		TASK FORCE TIPS #A18 SERIES INTAKE RELIEF VALVE	1	KMEM
DC-05-2500		PUMP UL CERTIFICATION - 750 GPM & UP	1	KMEM
		WATEROUS, PUMP PRIMING PUMP AND CONTROLS	**1**	**KMEM**
DC-05-3680	>	TRIDENT "MANUAL" AIR PRIMING SYSTEM	1	KMEM
		WATEROUS, DRAINS & ACCESSORES	**1**	**KMEM**
DC-05-5110		ROTARY MASTER DRAIN VALVE	1	KMEM
DC-05-5400		DRAINS/BLEEDER "INNOVATIVE CONTROLS" LIFT UP @ ALL 1-1/2" OR LARGER	1	KMEM
DC-05-5500		SYNFLEX SUCTION, DISCHARGE, PRESSURE AND CONTROL LINES	1	KMEM
DC-10-2001		SIDE MOUNT PUMP MODULE, SA, RM AERIAL	1	KMEM
DC-10-2500		PUMP MODULE - STEEL CONSTRUCTION	1	KMEM
DC-10-3310		ONE (1) HADES 20K BTU HOT WATER HEATER FOR PUMP ENCLOSURE	1	KMEM
		****** HEADER, SUCTIONS - REARMOUNT SA, SIDE MOUNT**	**1**	**KMEM**
DC-14-3230		WATEROUS MAIN SUCTION INLETS 6" NST, 2000 GPM CSU PUMP	1	KMEM
DC-14-5300		SHORT NECK MAIN PUMP SUCTION INLETS - DS & OS	1	KMEM
DC-14-5560	>	6" NST MAIN PUMP SUCTION PRESSURE VENTED CAPS (2)	1	KMEM
		HEADER - AUXILIARY SUCTION/S - AERIALS	**1**	**KMEM**
DC-20-1000		2 1/2" AUX. SIDE SUCTION @ DS PANEL TO REAR OF MAIN INLET	1	KMEM
DC-20-1100		2 1/2" AKRON #8800 S.S. BALL VALVE, DS REAR AUX SUCTION	1	KMEM
DC-20-1200		SWING CONTROL @ VALVE, DS REAR AUX SUCTION	1	KMEM
DC-20-9500		BEHIND PANEL MOUNT	1	KMEM
		****** HEADER - TANK TO PUMP - MD REARMOUNTS**	**1**	**KMEM**
DC-25-1200		TANK TO PUMP - 3" VALVE - LADDERS & PLATFORMS	1	KMEM
DC-25-3110		3" AKRON #8800 SERIES - S.S. BALL, VALVE , TANK TO PUMP	1	KMEM
DC-25-5110		3" PUSH/PULL CONTROL FOR TANK TO PUMP	1	KMEM
		****** HEADER - TANK FILL - MD REARMOUNT**	**1**	**KMEM**
DC-30-2100		TANK FILL LINE 2" FROM PUMP - SIDE MOUNT	1	KMEM
DC-30-2300		2" AKRON #8800 SERIES - S.S. BALL TANK FILL, SIDE MOUN	1	KMEM
DC-30-6500		PUSH/PULL CONTROL FOR TANK FILL	1	KMEM
		****** DISCHARGES & ACCESSORIES, RM-SA-MD AERIAL - SIDE MOUNT**	**1**	**KMEM**
		DRIVER'S SIDE #1 MAIN DISCHARGE	**1**	**KMEM**
DC-35-0010		DS MAIN DISCHARGE #1 - SIDE MOUNT	1	KMEM
DC-35-0110		2 1/2" AKRON #8800 SERIES - S.S. BALL, DS #1, SIDE MOUNT	1	KMEM

PART NO	S	DESCRIPTION	QTY	ID
DC-35-1815		DS #1 DISCH - 2 1/2" STRAIGHT NST & 30-DEGREE NST ELBOW	1	KMEM
DC-35-2010		2 1/2" NST PRESSURE VENTED CAP - DS DISCHARGE #1	1	KMEM
DC-35-2410		PUSH/PULL CONTROL FOR DS DISCHARGE #1 -SIDE MOUNT	1	KMEM
DC-35-3110		INNOVATIVE CONTROLS LIQUID FILLED 2 1/2" PRESS GAUGE SS- DS DISCHARGE #1	1	KMEM
		DRIVER'S SIDE #2 MAIN DISCHARGE	**1**	**KMEM**
DC-35-5010		DS MAIN DISCHARGE #2 - SIDE MOUNT	1	KMEM
DC-35-5110		2 1/2" AKRON #8800 SERIES - S.S. BALL, DS #2, SIDE MOUNT	1	KMEM
DC-35-6815		DS #2 DISCH - 2 1/2" STRAIGHT NST & 30-DEGREE NST ELBOW	1	KMEM
DC-35-7010		2 1/2" NST PRESSURE VENTED CAP - DS DISCHARGE #2	1	KMEM
DC-35-7410		PUSH/PULL CONTROL FOR DS DISCHARGE #2 -SIDE MOUNT	1	KMEM
DC-35-8110		INNOVATIVE CONTROLS LIQUID FILLED 2 1/2" PRESS GAUGE SS- DS DISCHARGE #2	1	KMEM
		OFFICER'S SIDE #1 MAIN DISCHARGE	**1**	**KMEM**
DC-39-0010	>	OS MAIN DISCHARGE #1 - SIDE MOUNT	1	KMEM
DC-39-0110		2 1/2" AKRON #8800 SERIES - S.S. BALL, OS #1, SIDE MOUNT	1	KMEM
DC-39-1815		OS #1 DISCH - 2 1/2" STRAIGHT NST & 30-DEGREE NST ELBOW	1	KMEM
DC-39-2010		2 1/2" NST PRESSURE VENTED CAP - OS DISCHARGE #1	1	KMEM
DC-39-2410		PUSH/PULL CONTROL FOR OS DISCHARGE #1 -SIDE MOUNT	1	KMEM
DC-39-3110		INNOVATIVE CONTROLS LIQUID FILLED 2 1/2" PRESS GAUGE SS- OS DISCHARGE #1	1	KMEM
		OFFICER'S SIDE #2 MAIN DISCHARGE	**1**	**KMEM**
DC-39-5010	>	OS MAIN DISCHARGE #2 - SIDE MOUNT	1	KMEM
DC-39-5080	>	**** WATEROUS PUMP LDH DISCHARGE PORT ****	1	KMEM
DC-39-5130	>	4" AKRON #8840 VALVE, OS #2, SIDE MOUNT	1	KMEM
DC-39-6865	>	OS #2 DISCH - 4" STRAIGHT NST	1	KMEM
DC-39-7045		DELETE 4" NST CAP - OS DISCHARGE #2	1	KMEM
DC-39-7315		4" NSTF X 4" STORZ KOCHEK SKE-R 30° ADAPTER WITH CAP OS	1	KMEM
DC-39-7810	>	AKRON HANDWHEEL GEAR VALVE CONTROL, OS DISCHARGE #2	1	KMEM
DC-39-8110		INNOVATIVE CONTROLS LIQUID FILLED 2 1/2" PRESS GAUGE SS- OS DISCHARGE #2	1	KMEM
		CROSSLAY #1 DISCHARGE	**1**	**KMEM**
DC-47-0400		CROSSLAY #1, 1 1/2" - AERIAL	1	KMEM
DC-47-1110		CROSSLAY #1 CAPACITY - 200' OF 1 3/4" HOSE	1	KMEM
DC-47-1410		CROSSLAY #1 - DOUBLE STACK HOSE DESIGN	1	KMEM
DC-47-1510		1 1/2" NST CHICKSAN SWIVEL - CROSSLAY #1	1	KMEM
DC-47-2110		CROSSLAY #1, PLUMBING, 2" STAINLESS STEEL PIPING	1	KMEM
DC-47-2210		2" AKRON #8800 SERIES - S.S. BALL, VALVE CROSSLAY #1, DISCH	1	KMEM
DC-47-2610		PUSH/PULL 1/4 TURN CONTROL CROSSLAY #1	1	KMEM
DC-47-3210		INNOVATIVE CONTROLS LIQUID FILLED 2 1/2" PRESS GAUGE SS - CROSSLAY #1	1	KMEM
		CROSSLAY #2 DISCHARGE	**1**	**KMEM**
DC-47-5400		CROSSLAY #2, 1 1/2" - AERIAL	1	KMEM
DC-47-6110		CROSSLAY #2 CAPACITY - 200' OF 1 3/4" HOSE	1	KMEM
DC-47-6410		CROSSLAY #2 - DOUBLE STACK HOSE DESIGN	1	KMEM
DC-47-6510		1 1/2" NST CHICKSAN SWIVEL - CROSSLAY #2	1	KMEM
DC-47-7110		CROSSLAY #2, PLUMBING, 2" STAINLESS STEEL PIPING	1	KMEM
DC-47-7210		2" AKRON #8800 SERIES - S.S. BALL, VALVE CROSSLAY #2,	1	KMEM
DC-47-7610		PUSH/PULL 1/4 TURN CONTROL CROSSLAY #2	1	KMEM
DC-47-8210		INNOVATIVE CONTROLS LIQUID FILLED 2 1/2" PRESS GAUGE SS - CROSSLAY #2	1	KMEM
		CROSSLAY & SPEEDLAY OPTIONS - RM AERIAL	**1**	**KMEM**
DC-50-7015	>	VINYL CROSS LAY COVER	1	KMEM
DC-50-7030		CROSSLAY COVER RED IN COLOR	1	KMEM
	>	**WATERWAY DISCHARGE**	**1**	**KMEM**
DC-62-0210		AERIAL WATERWAY DISCHARGE - SA-RM AERIAL	1	KMEM
DC-62-1130		WATERWAY DISCHARGE, PLUMBING, 4" STAINLESS STEEL - RM	1	KMEM
DC-62-1240		4" AKRON #8840 SERIES VALVE, WATERWAY	1	KMEM
DC-62-1950	>	AKRON HANDWHEEL GEAR VALVE CONTROL, WATERWAY	1	KMEM
DC-62-2210		INNOVATIVE CONTROLS LIQUID FILLED 2 1/2" PRESS GAUGE SS - WATERWAY	1	KMEM

PART NO	S	DESCRIPTION	QTY	ID
		PUMP PANELS & ACCESSORIES	**1**	**KMEM**
DD-65-0505		SIDE MOUNT PUMP PANEL - RM AERIAL	1	KMEM
DD-65-4115		SIDE MOUNT PANELS - 12 GAUGE BRUSHED STAINLESS STEEL	1	KMEM
DD-65-4710		VERTICALLY HINGED GAUGE PANEL - SIDE MOUNT	1	KMEM
DD-65-4810		OFFICER SIDE VERTICALLY HINGED PUMP ACCESS DOOR - SIDE MOUNT	1	KMEM
DD-65-5150		PANEL FASTENERS	1	KMEM
DD-65-5510		CAPS AND ADAPTERS SAFETY TETHER - BALL CHAIN	1	KMEM
DD-65-8820		PUMP PANEL DISCH./SUCTION TRIM PLATES, HIGH POLISHED	1	KMEM
DD-65-9000		DISCHARGE GAUGE TRIM BEZELS	1	KMEM
DD-65-9110		IDENTIFICATION PLATES	1	KMEM
DD-66-0100		PUMP OPERATOR'S PANEL LIGHT SHIELD	1	KMEM
DD-66-0135		TECNIQ E18 LED LIGHTS - LIGHT SHIELD	1	KMEM
DD-66-2100		OS PUMP PANEL LIGHTING	1	KMEM
DD-66-2130		TECNIQ EON 3 LED LIGHTS - OS PUMP PANEL	1	KMEM
		PUMP OPERATOR'S PANEL - SIDE MOUNT, AERIAL	**1**	**KMEM**
DD-70-2150		AIR HORN CONTROL BUTTON ON PUMP PANEL	1	KMEM
DD-70-2290		3/4" PUMP BY-PASS COOLER ON PUMP PANEL	1	KMEM
DD-70-2335		FIRE RESEARCH "IN CONTROL" PRESSURE GOVERNOR CONTROL @ PANEL	1	KMEM
DD-70-2410		PUMP PRESSURE & VACUUM TEST PORTS @ PANEL	1	KMEM
DD-70-4125	>	DELETE - MASTER PRESSURE & COMPOUND GAUGES	1	KMEM
DD-70-4130		**** CONSIDER DELETING MASTER GAUGES - IN GOVERNOR DISPLAY ****	1	KMEM
DD-70-4680		PRESSURE & COMPOUND GAUGE RANGES - SINGLE STAGE	1	KMEM
DD-70-4900		AUXILIARY ENGINE COOLER	1	KMEM
DD-70-4930		GAUGE HEATERS, MC PRODUCTS ON ALL DISCHARGE GAUGES	1	KMEM
		WATER TANK LEVEL GAUGE - AERIAL	**1**	**KMEM**
DD-72-0410		FIRE RES - TANK VISION #WLA300-A00 LED WATER TANK GAUGE - PRIMARY	1	KMEM
DD-72-1300	>	FIRE RES WATER LEVEL - 1/4" NPT PRESS TRANS @ BOTTOM TANK	1	KMEM
DD-80-0110		SLIDE-OUT STEP @ DRIVER'S PUMP OPERATOR'S PANEL	1	KMEM
DE-00-1000	>	**** HEADER, 75-79' SA, WATER TANK	1	KMEM
		WATER TANKS/OPTIONS AERIALS	**1**	**KMEM**
DE-05-1700	>	UPF POLYIIE TANK, 300 GAL. - AERIAL	1	KMEM
DE-05-6000		TANK DESCRIPT, CONSTR AND MOUNT, UPF POLY IIE TANK	1	KMEM
JA-00-0100		BODY AND COMPARTMENT HEADER (ALL AERIAL DEVICES)	1	KMEM
JA-00-5000		GEN. 3/16" ALUM BODY DESCRIPTION FOR REAR MOUNT AERIALS 79 SA	1	KMEM
TF-02-1060		COMPARTMENTATION, 79SA STYLE #4H-HI "STRAIGHT SHOT"	1	KMEM
		****** HEADER, 79-SA BODY OPTIONS (WITH PUMP)**	**1**	**KMEM**
TF-10-0100		BEVELED OVERLAPPING DOORS, ALL COMPARTMENTS, ALL DEVICES	1	KMEM
TF-10-1900		BRUSHED FINISHED DOOR PANS - 2" THICK DOORS	1	KMEM
TF-10-2700		DOOR HINGE FOR BEVELED OVERLAPPING HINGED DOORS	1	KMEM
TF-10-2800		DOOR SEAL FOR BEVELED OVERLAPPING HINGED DOORS	1	KMEM
TF-10-2940		ROTARY LATCHES WITH D-RING HANDLES	1	KMEM
TF-10-3150		GAS SHOCK ON HORIZONTALLY & VERTICALLY HINGED DOORS	1	KMEM
TF-10-6000		COMPARTMENT FLOORS (AERIALS ONLY)	1	KMEM
TF-11-0500		COMPARTMENT GENERAL DESCRIPTION, ALL LADDERS & PLATFORMS	1	KMEM
TF-11-1441		PAINTED REAR BODY PANEL, RM	1	KMEM
TF-11-2210		1/2 WIDTH S. S. OUTRIGGER COVER PANEL, TWO RIGGER DEVICES	1	KMEM
TF-11-3045		BODY RUB RAILS, C-CHANNEL	1	KMEM
TF-12-1000		RUNNING BOARD STEPS (AERIALS ONLY)	1	KMEM
TF-13-3010		REAR TURNTABLE ACCESS LADDER FRAMEWORK (SS) 75/100 SA/TA	1	KMEM
TF-13-3115		REAR MOUNT, TURNTABLE PULL/DROP STEPS, DS REAR (HD-S/S)	1	KMEM
TF-13-5010		REAR-MOUNTS, "STRAIGHT SHOT" EXTRUDED ALUMINUM BODY HANDRAILS	1	KMEM
TF-14-1000		ALUMINUM WHEEL WELL LINERS	1	KMEM
TF-14-1700		POLISHED ALUMINUM FENDERETTES, SINGLE AXLE BODIES	1	KMEM
TF-14-5000		REAR MUD FLAPS	1	KMEM
TF-14-6700		PAINTED REAR TOW EYES, BELOW BODY - REARMOUNT AERIALS	1	KMEM
TF-15-1030		HOSE BED, "STRAIGHT SHOT", 75-100 HIGH BODY	1	KMEM
TF-15-1900		ALUMINUM HOSE BED FLOORING - AERIAL	1	KMEM

PART NO	S	DESCRIPTION	QTY	ID
TF-15-3110		HOSE BED COVER, VINYL WITH QTR TURNS	1	KMEM
TF-15-3190		HYPALON MATERIAL RED IN COLOR	1	KMEM
		****** HEADER, COMPARTMENT ACCESSORIES - REARMOUNTS**	**1**	**KMEM**
TJ-05-1000		ADJUSTABLE SHELF DESCRIPTION - REARMOUNT	1	KMEM
TJ-05-2000	>	(AUTO QTY) ADJUSTABLE SHELF(S), MOUNTED AS DIRECTED	8	KMEM
TJ-10-1000		250#, FLOOR MOUNTED, ROLLOUT TRAY DESCRIPTION - REARMOUNT	1	KMEM
TJ-10-1105	>	(AUTO QTY) ROLLOUT TRAY(S), MOUNTED AS DIRECTED	4	KMEM
TJ-55-1000		SWING OUT TOOL BOARD, PAC TRAC DOUBLE FACED EXTRUSION - REARMOUNT	1	KMEM
TJ-55-1200	>	(AUTO QTY) SWING OUT TOOL BOARD(S), MOUNTED AS DIRECTED	1	KMEM
	>	**"NOTE" READ THIS BEFORE ADDING ANY ADDITIONAL GROUND LADDERS**	**1**	**KMEM**
		****** HEADER, 79-SA-HI-SS GROUND LADDERS**	**1**	**KMEM**
TN-00-5015	>	CENTER LADDER STORAGE, 79' SA "STRAIGHT SHOT"	1	KMEM
TN-00-7020		ROLL-UP DOOR - BRUSHED, LADDER COMPARTMENT, REAR MOUNT ONLY	1	KMEM
TN-01-0115		ALCO-LITE 115' LADDER COMP, 79' SA "STRAIGHT SHOT"	1	KMEM
TN-02-1155		ALCO-LITE PEL-30 30' 2-SECTION EXTENSION LADDER (ALUM)	1	KMEM
TN-02-1160		ALCO-LITE PEL-28 28' 2-SECTION EXTENSION LADDER (ALUM)	1	KMEM
TN-02-2510		ALCO-LITE PRL-16 16' ROOF LADDER W/FOLDING HOOKS (ALUM)	2	KMEM
TN-02-7000		ALCO-LITE AEL-14 14' ATTIC EXTENSION LADDER (ALUM)	1	KMEM
TN-02-8005		ALCO-LITE FL-12 12' FOLDING ATTIC LADDER (ALUM)	1	KMEM
		****** HEADER, PIKE POLES & HOLDERS - AERIALS**	**1**	**KMEM**
TN-10-0500	>	PIKE POLE TUBE(S) - AERIALS	6	KMEM
TN-10-2030		FIRE HOOKS UNLIMITED PIKE POLES 2-6', 2-8', & 2-12' WITH FIB	1	KMEM
TN-20-0000		ADDITIONAL ITEMS SHIPPED WITH VEHICLE, ALL AERIAL DEVICES	1	KMEM
		****** HEADER, LOOSE EQUIPMENT - AERIAL**	**1**	**KMEM**
TN-35-1015		TWO (2) ZICO #SAC-44 FOLDING WHEEL CHOCKS, (2) MTD DRIVER SIDE	1	KMEM
		****** HEADER, 79' AERIAL LADDER, SINGLE AXLE - 750# W/DOWNRIGGERS**	**1**	**KMEM**
TQ-00-0560		79' AERIAL LADDER, GEN INFO, INTENT & DESIGN STANDARDS	1	KMEM
TQ-00-3000		MOUNTING OF AERIAL, REAR MOUNTS	1	KMEM
TQ-00-3210		HEIGHT AND REACH, 79' AERIAL LADDER	1	KMEM
TQ-00-4000		MATERIAL STANDARDS, ALL DEVICES	1	KMEM
TQ-00-5004		79' AERIAL LADDER, HYDRAULIC SYSTEM, 750#	1	KMEM
TQ-00-5110		PARKER HOSE KIT - 2 JACK UNIT	1	KMEM
TQ-00-6120		HYDRAULIC PUMP - PRESSURE COMPENSATED	1	KMEM
TQ-00-7010		HYDRAULIC RESERVOIR - 40 GALLON	1	KMEM
TQ-00-7065		HYDRAULIC OIL - REGULAR - A/W 46 - 60 GAL	1	KMEM
TQ-00-7110		DIVERTER VALVE, REAR MOUNT DEVICES	1	KMEM
TQ-00-7214		OUTRIGGER HYDRAULIC CONTROL VALVE - 79 RM, PROPORTIONAL	1	KMEM
TQ-00-7410		ELECTRIC TURNTABLE HYDRAULIC CONTROL VALVE, RM LADDERS	1	KMEM
TQ-00-7505		HYDRAULIC SYSTEM FILTRATION	1	KMEM
TQ-00-8510		RM LADDER 2-OUTRIGGER, "IQAN" MOTION CONTROL SYSTEM - ELECTRIC CONTROLS @ TT	1	KMEM
TQ-00-8700		HYDRAULIC PUMP PRESSURE - DISPLAY	1	KMEM
TQ-00-8710		ELEVATION ANGLE OF LADDER - DISPLAY	1	KMEM
TQ-00-8715		VERTICAL HEIGHT OF LADDER - DISPLAY	1	KMEM
TQ-00-8725		DEGREE OF ROTATION FROM VEHICLE CENTERLINE - DISPLAY	1	KMEM
TQ-00-8730		E-ZONE CAB & BODY AVOIDANCE WARNING - DISPLAY	1	KMEM
TQ-00-8735		E-ZONE SHORT JACK WARNING - DISPLAY	1	KMEM
TQ-00-8740		CRADLE ALIGNMENT MESSAGE - DISPLAY	1	KMEM
TQ-00-8750		DEVICE LOAD MONITORING - DISPLAY	1	KMEM
TQ-00-8760		E-SPEED LADDER TIP SPEED CONTROL - DISPLAY	1	KMEM
TQ-00-8765		E-CUSH RAMP CONTROL FOR ELEVATION - DISPLAY	1	KMEM
TQ-00-8770		E-CUSH RAMP CONTROL FOR EXTENSION & RETRACTION - DISPLAY	1	KMEM
TQ-00-8890		WARNING MESSAGES - TURNTABLE ONLY	1	KMEM
TQ-00-9502		79' AERIAL LADDER, EMERGENCY HYDRAULIC PUMP, EPU	1	KMEM
TQ-01-1000		HOT SHIFT PTO W/CONTROLS IN CAB	1	KMEM
TQ-01-1100		FAST IDLE CONTROL FOR ALL AERIAL DEVICES	1	KMEM
TQ-02-0014		79' AERIAL LADDER, TORQUE BOX, SINGLE AXLE 750# W/DOWNRIGGERS	1	KMEM
TQ-02-1012		79' AERIAL LADDER OUTRIGGERS, SINGLE AXLE 750# W/DOWNRIGGERS	1	KMEM
TQ-02-1612		79' AERIAL LADDER OUTRIGGERS, SA - HORIZONTAL CYLINDER 750#	1	KMEM

PART NO	S	DESCRIPTION	QTY	ID
TQ-02-1812		79' AERIAL LADDER OUTRIGGERS, SA - VERTICAL CYLINDERS, 750#	1	KMEM
TQ-02-2100		IQAN - OUTRIGGER STRING POTENTIOMETER - TWO (2) OUTRIGGERS	1	KMEM
TQ-02-2250		OVERSIZED OUTRIGGER/JACK FOOT PADS, APPLICABLE DEVICES	1	KMEM
TQ-02-2500		OUTRIGGER INTERLOCK SYSTEM & ALARM, ALL DEVICES	1	KMEM
		****** HEADER - OUTRIGGER LIGHTING, 2-OUTRIGGERS / 2-DOWNRIGGERS**	**1**	**KMEM**
TQ-02-5125		AKRON LED OUTRIGGER LAMPS, 2-OUTRIGGERS	1	KMEM
TQ-02-5205		LED OUTRIGGER GROUND LIGHTS - GROTE WHITELIGHT, 2-OUTRIGGERS	1	KMEM
TQ-02-5360		CODE 3 45 SERIES, LED LIGHTS ON (4) OUTRIGGER PANELS	1	KMEM
TQ-02-6005		OUTRIGGER WARNING LIGHT ACTIVATION, PRIMARY WARNING	1	KMEM
TQ-02-6830		OUTRIGGER SCOTCHLITE - DIAMOND GRADE, RED/YELLOW CHEVRON	1	KMEM
TQ-02-7005		79' RM LADDER, BUTTON OUTRIGGER CONTROLS - SINGLE JACKS W/DOWNRIGGERS	1	KMEM
TQ-02-9200		OUTRIGGER LEVEL SIDE TO SIDE, ALL REAR MOUNT DEVICES	1	KMEM
TQ-03-0102		79' AERIAL LADDER, TURNTABLE, SINGLE & TANDEM AXLE	1	KMEM
TQ-03-3010		TURNTABLE DECK - ALUMINUM TREADPLATE	1	KMEM
TQ-04-1852		HEEL PIN STEP ON TURNTABLE, 79', 103', 109' & 123' & 100' M.M. LADDERS	1	KMEM
TQ-04-1855		TURNTABLE HANDRAILS, KNURLED ALUMINUM, 3-SIDES	1	KMEM
TQ-04-2112		HEEL PINS - 79'	1	KMEM
TQ-04-2300		STAINLESS STEEL CRADLE ALIGNMENT ARROWS ON TURNTABLE	1	KMEM
TQ-04-2820		FIRE RESEARCH "MAN SAVER" BARS @ TURNTABLE OPENINGS	1	KMEM
TQ-04-5002		79' AERIAL LADDER, TURNTABLE SWIVEL, TANDEM & SINGLE AXLE	1	KMEM
TQ-04-9000		IQAN - SWIVEL ROTATION ENCODER	1	KMEM
TQ-06-0102		79' LADDER, LADDER CONSTRUCTION, SINGLE & TANDEM AXLE	1	KMEM
TQ-06-0900		STAINLESS STEEL EGRESS W/TIP SKID GAURDS	1	KMEM
TQ-06-1000		79' SA/TA, LADDER DIMENSIONS	1	KMEM
TQ-06-3000		RUNG COVERS - PHOTOLUMINESCENT, ALL DEVICES	1	KMEM
TQ-06-4000		*** MUST UPGRADE TO DUAL STEPS - CREEPER CONTROLS SELECTED ***	1	KMEM
TQ-06-4015		DUAL FOLDING STEPS @ LADDER TIP, ALL DEVICES	1	KMEM
TQ-06-4100		RED SCOTCHLITE MATERIAL ON LAST 6' OF LADDER TIP	1	KMEM
TQ-06-4200		4' FIRE HOOKS UNLIMITED PIKE POLE MOUNTED IN FLY SECTION OF LADDER	1	KMEM
TQ-06-4240	>	PIKE POLE MOUNTED ON LEFT SIDE OF FLY SECTION	1	KMEM
TQ-06-4250		6 LB. PICKHEAD AXE MOUNTED IN FLY SECTION, INCLUDES AXE	1	KMEM
TQ-06-4260	>	AXE MOUNTED ON LEFT SIDE OF FLY SECTION	1	KMEM
TQ-06-6500		RESCUE EYELET ON LAST RUNG OF LADDER TIP	1	KMEM
TQ-06-9000		AERIAL TRAVEL SUPPORT, ALL DEVICES	1	KMEM
TQ-06-9035		CRADLE ILLUMINATION LIGHTS - GROTE WHITELIGHT LED	1	KMEM
TQ-07-0102		79' AERIAL LADDER, ELEVATION SYSTEM, S/A AND T/A	1	KMEM
TQ-07-2800		IQAN - INCLINOMETER	1	KMEM
TQ-07-2801		IQAN - MOMENT LOAD INDICATOR	1	KMEM
TQ-07-2805		IQAN - E-CUSH CONTROL, ELEVATION SYSTEM - LADDER	1	KMEM
TQ-08-0102		79' AERIAL LADDER, ROTATION SYSTEM, SA & TA	1	KMEM
TQ-08-2800		ROTATION MOTOR AND BRAKE - 41" EXTERNAL BEARINGS	1	KMEM
TQ-08-2950		SWING DRIVE ADJUSTMENT	1	KMEM
TQ-08-3000		IQAN - "E-SPEED" SAFETY SYSTEM, LADDERS	1	KMEM
TQ-08-3100		IQAN - "E-ZONE" ROTATION SAFETY SYSTEM, 2-OUTRIGGERS	1	KMEM
TQ-08-3650		IQAN - "E-ZONE" CAB & BODY PROXIMITY SYSTEM - LADDERS	1	KMEM
TQ-09-0102		79' AERIAL LADDER, EXTENSION/RETRACTION SYSTEM, SINGLE & TAN	1	KMEM
TQ-09-2350		EXTENSION CYLINDERS PAINTED LADDER PAINT COLOR	1	KMEM
TQ-09-2800		IQAN - EXTENSION SYSTEM STRING POTENTIOMETER	1	KMEM
TQ-09-2810		IQAN - "E-CUSH" EXTENSION/RETRACTION SYSTEM - LADDERS	1	KMEM
TQ-09-3020		LADDER SLIDE PADS, 79' LADDER	1	KMEM
		LADDER EXTENSION NUMBERS, ALL DEVICES	**1**	**KMEM**
TQ-09-3150		LADDER LEVEL INDICATOR (BASE SECTION) - LIGHTED	1	KMEM
TQ-09-3205		LADDER, CABLE/HOSE/WIRE ROUTING, 79' LADDER	1	KMEM
		****** HEADER - LADDER, 120 VOLT ELECTRICAL SYSTEM & ACCESSORIES**	**1**	**KMEM**
TQ-10-0100		LADDER, 120 VOLT ELECTRICAL SYSTEM	1	KMEM
TQ-10-0125		DELETE LADDER TIP RECEPTACLE	1	KMEM
		****** HEADER - LADDER, 12 VOLT ELECTRICAL SYSTEM & ACCESSORIES**	**1**	**KMEM**
TQ-10-1018		HEEL PIN STEP LIGHTS - TECNIQ EON 3 LED LIGHTS	1	KMEM

PART NO	S	DESCRIPTION	QTY	ID
TQ-10-1040		TURNTABLE CONTROL CONSOLE LIGHTING - LUMA BAR LED H2O	1	KMEM
TQ-10-1060		TURNTABLE CONSOLE STEP LIGHT - TECNIQ EON 3 LED	1	KMEM
TQ-10-1110		TWO (2) UNITY SPOTS @ LADDER BASE SECTION	1	KMEM
TQ-10-1242		TWO (2) UNITY LED SPOT LIGHTS @ LADDER TIP	1	KMEM
TQ-10-2800		LADDER WALKWAY ILLUMINATION LIGHTS, 3-SECT LADDER	1	KMEM
TQ-10-2850		RED - LADDER ILLUMINATION LIGHTS	1	KMEM
TQ-12-0010		LADDER, CONTROL STATION	1	KMEM
TQ-12-0020		RM LADDERS, CONSOLE LOCATED @ LH SIDE OF TURNTABLE, STD	1	KMEM
TQ-12-0085		PAINTED ALUMINUM TURNTABLE CONSOLE - MATCH LADDER COLOR	1	KMEM
TQ-12-0100		79' AERIAL LADDER, TURNTABLE CONTROL STATION, SA & TA	1	KMEM
TQ-12-2520		FIRE RESEARCH INSIGHT FLOWMETER @ TURNTABLE CONSOLE	1	KMEM
TQ-12-2595		TURNTABLE CONSOLE COVER - PAINTED RADIUS	1	KMEM
TQ-12-3000		IQAN - "CREEPER CONTROLS" @ LADDER TIP	1	KMEM
TQ-14-1200		LADDER, FIRE RESEARCH ACT -2 WAY COMMUNICATION SYSTEM - LOWER CONTROL	1	KMEM
TQ-14-1205		LADDER, FIRE RESEARCH ACT 2-WAY COMMUNICATION SYSTEM - UPPER SPEAKER/MIC	1	KMEM
TQ-18-0012		79' AERIAL LADDER, LADDER WATERWAY SYSTEM, SINGLE & TANDEM	1	KMEM
TQ-18-1012		79' AERIAL LADDER, LADDER, SINGLE & TANDEM WATERWAY	1	KMEM
TQ-18-2502		4" HEEL PIN SWIVEL - 79' LADDER	1	KMEM
TQ-18-2600		AUTOMATIC WATER DRAIN/VENT	1	KMEM
TQ-18-3000		ALL DEVICES, WATERWAY RELIEF VALVE	1	KMEM
TQ-18-3015		REAR MOUNT AERIAL WATERWAY DRAIN, 1 1/2" VALVE	1	KMEM
TQ-18-3150		4" NST REAR AERIAL WATERWAY INLET ADAPTER, REAR MOUNTS	1	KMEM
TQ-18-3200		4" NSTF x 4" STORZ KOCHEK SKE-R 30° ADAPTER FOR REAR INLET	1	KMEM
TQ-18-3800		INNOVATIVE CONTROLS 2 1/2" GAUGE FOR AERIAL INLET, REAR MOUNTS	1	KMEM
TQ-18-4130	>	LADDER, AKRON #3480 "STREAMMASTER II" MONITOR	1	KMEM
TQ-18-4210	>	LADDER, AKRON #5178 NOZZLE	1	KMEM
TQ-18-4300		LADDER, AKRON MONITOR CONTROLS W/ AUTO STOW	1	KMEM
TQ-18-4505		LADDER, ELECTRIC SELECTABLE WATERWAY TROLLEY - NEW	1	KMEM
		LADDER MANUAL TFT VALVE UNDER MONITOR	**1**	**KMEM**
TQ-18-4775		2.5" NH MALE THREAD - C1- VALVE UNDER MONITOR	1	KMEM
TQ-18-4790		EXTENDED AUTOMATIC DRAIN - C1 - VALVE UNDER MONITOR	1	KMEM
TQ-18-4795		2-1/2" x 1-1/2" REDUCER WITH CAP, FOR V ALVE UNDER MONITOR DISCHARGES	1	KMEM
TQ-18-4950		"STORE FRONT BLITZ" DESCRIPTION	1	KMEM
TQ-20-0102		79' AERIAL LADDER, LADDER CAPACITIES, SINGLE AXLE, 750#	1	KMEM
TQ-50-0200	>	FIRE DEPT AERIAL FAMILIARIZATION - PROVIDED BY REP	1	KMEM
TQ-50-0240	>	REP PROVIDED FAMILIARIZATION - FOUR (4) DAYS	1	KMEM
TQ-50-0600		AERIAL SERVICE, ALL DEVICES	1	KMEM
TQ-50-0700		WARNING DECALS, ALL DEVICES	1	KMEM
TQ-52-0100		AERIAL LADDER, MANUALS, TWO (2) SETS	1	KMEM
TQ-70-0102	>	79' AERIAL LADDER, SINGLE AXLE, CERTIFICATION & TESTING, 750#	1	KMEM
		****** HEADER - PAINT SECTION - ALL UNITS ******	**1**	**KMEM**
UA-00-1100		GENERAL PAINT DESCRIPTION - ALL	1	KMEM
UA-00-1200		GENERAL PRIMER & PREP DESCRIPTION - LADDER/PLATFORM	1	KMEM
UA-00-1400		GENERAL FINISH PAINT DESCRIPTION - LADDER/PLATFORM	1	KMEM
UA-00-2700		BODY BUFFING & FINISH - LADDER/PLATFORM	1	KMEM
		****** HEADER - LADDER/PLATFORM BODY PAINT ******	**1**	**KMEM**
UA-03-0200		INSIDE/UNDERSIDE BODY PAINTED JOB COLOR - LADDER/PLATFORM	1	KMEM
UA-03-0400		CMPT INT W/ MULTISPEC, WHITE MARBLE STONE - LADDER/PLATFORM	1	KMEM
UA-03-0900		SINGLE COLOR BODY PAINT SCHEME - LADDER/PLATFORM	1	KMEM
UA-03-2200		PUMPHOUSE & PLUMBING PAINTED JOB COLOR - LADDER/PLATFORM	1	KMEM
		****** HEADER - SINGLE AXLE CUSTOM CHASSIS PAINT (AERIAL)**	**1**	**KMEM**
UA-05-0050		CUSTOM CAB PRIMER & PREP	1	KMEM
UA-05-0070		CUSTOM FINISH PAINT & PREP	1	KMEM
UA-05-0200		TWO TONE CUSTOM CAB PAINT SCHEME	1	KMEM
UA-05-0350		CUSTOM CAB BUFFING & FINISH	1	KMEM
UA-05-0360		CUSTOM CAB INTERIOR PAINT - TEXTURED GRAY	1	KMEM
UA-05-0405		CUSTOM CHASSIS JOB COLOR FRAME RAILS	1	KMEM

PART NO	S	DESCRIPTION	QTY	ID
UA-05-0500		CUSTOM CHASSIS WHEEL AND HUB PAINT - SINGLE AXLE	1	KMEM
UA-06-0200		LADDER, PAINTING, ALL DEVICES, WHITE #91528	1	KMEM
UA-06-0450		EXTENSION CYLINDERS PAINTED TO MATCH LADDER COLOR	1	KMEM
UA-06-0900		TORQUEBOX PAINT - JOB COLOR	1	KMEM
UA-06-1100		OUTRIGER PAINT - SILVER URETHABOND 104	1	KMEM
UA-06-1205		TURNTABLE PAINT - LADDER COLOR	1	KMEM
UA-06-1215		TURNTABLE CONSOLE PAINT - LADDER COLOR	1	KMEM
UA-06-1225		LIFT CYLINDERS CONSOLE PAINT - LADDER COLOR	1	KMEM
UA-06-1500		LADDER RUST INHIBITOR - ALL DEVICES	1	KMEM
UA-06-2120	>	PAINT CODES, TWO-TONE COLORS, FILL IN BLANKS	1	KMEM
UA-06-2130		PAINT CODES, AERIAL DEVICE - WHITE #91528	1	KMEM
UA-06-2200		PINT OF TOUCH-UP PAINT	1	KMEM
UA-06-2510		FINALIZATION & DETAILING - LADDER/PLATFORM	1	KMEM
UA-06-2850		RUSTPROOFING WARRANTY, TEN (10) YEAR	1	KMEM
		****** HEADER, LETTERING & STRIPING - 79-SA-RM**	**1**	**KMEM**
UA-12-0100		COMPUTER GENERATED LETTERING	1	KMEM
UA-12-1220		GOLDLEAF W/ DUAL DROP SHADOW LETTERING ON FRONT CAB DOORS	1	KMEM
UA-12-1245		3" LETTERING ON FRONT CAB DOORS	1	KMEM
UA-12-1760		GOLDLEAF W/ DUAL DROP SHADOW LETTERING ON CREW CAB DOORS	1	KMEM
UA-12-1785		3" LETTERING ON CREW CAB DOORS	1	KMEM
UA-12-2720		GOLDLEAF W/ DUAL DROP SHADOW LETTERING ON FRONT OF CAB	1	KMEM
UA-12-2745		3" LETTERING ON FRONT OF CAB	1	KMEM
UA-12-3120		GOLDLEAF W/ DUAL DROP SHADOW LETTERING ON CAB SIDE PANEL	1	KMEM
UA-12-3145		3" LETTERING ON CAB SIDE PANEL	1	KMEM
UA-12-3660		SCOTCH-LITE W/ DROP SHADOW LETTERING ON REAR BODY PANEL	1	KMEM
UA-12-3745		3" LETTERING ON REAR BODY	1	KMEM
UA-13-0100		LETTERING FONT - BASIC BLOCK TYPE FONT	1	KMEM
UA-14-1310		LARGE CUSTOM FIRE DEPARTMENT LOGO	1	KMEM
UA-14-1320		SCOTCH-LITE W/ TWO COLORS - LARGE LOGO	1	KMEM
UA-14-1335	>	LOCATION - LARGE CUSTOM LOGO	1	KMEM
UA-16-1000		ACCENT STRIPING & SCROLL OPTIONS	1	KMEM
UA-16-1200		1/2" ACCENT STRIPE ON BODY UPPER & LOWER AREAS OF BODY	1	KMEM
UA-16-1210		GOLD LEAF ACCENT MATERIAL - UPPER & LOWER AREAS OF BODY	1	KMEM
UA-16-1500		1/2" ACCENT STRIPE ON CAB PAINT BREAK LINE	1	KMEM
UA-16-1510		GOLD LEAF ACCENT MATERIAL - CAB PAINT BREAK LINE	1	KMEM
UA-20-0100		19" X 144" LETTERING PANELS ON BASE SECTION	1	KMEM
UA-20-0200		SIGN PANELS TO PAINTED TO MATCH AERIAL DEVICE COLOR	1	KMEM
UA-20-0500		SCOTCH-CAL W/O DROP SHADOW LETTERING FOR AERIAL	1	KMEM
UA-50-0100		NFPA REQUIRED SCOTCH-LITE STRIPING - SA AERIAL	1	KMEM
UA-50-0120		8" SCOTCH-LITE STRIPE ON CAB AND BODY - SA AERIAL	1	KMEM
UA-58-5100		WHITE SCOTCH-LITE	1	KMEM
UA-80-6000		REAR CHEVRON STRIPING	1	KMEM
UA-80-6002		50% VERTICAL SURFACE	1	KMEM
UA-80-6050		6" 50% REAR SCOTCH-LITE DIAMOND GRADE CHEVRON STRIPING	1	KMEM
UA-80-6075		RED & FLUORESCENT YELLOW GREEN DIAMOND GRADE SCOTCH-LITE	1	KMEM
		****** PROPOSED - AERIAL WARRANTY PKG, W/PUMP @ REAR OF SPEC**	**1**	**KMEM**
W6-00-000J		PROPOSED - KME WARRANTY, STARTING ON DELIVERY DATE	1	KMEM
W6-00-0010	**X** <	PROPOSED - 5 YEAR FCAM WARRANTY - CUSTOM CHASSIS	1	
		$16,500 per email Phil to Byron 9-27-16		
W6-00-003M	>	PROPOSED - 5 YEAR WARRANTY - BASE WITH CUSTOM CHASSIS	1	KMEM
W6-00-0160		PROPOSED - 10 YEAR CUMMINS ISC / ISL - EXTENDED WARRANTY	1	KMEM
W6-00-0210		PROPOSED - 5 YEAR ALLISON EVS TRANSMISSION WARRANTY	1	KMEM
W6-00-0220		PROPOSED - 3 YEAR COOLING SYSTEM WARRANTY - CUSTOM	1	KMEM
W6-00-0230		PROPOSED - LIFETIME FRAMERAIL WARRANTY	1	KMEM
W6-00-0242		PROPOSED - SHEPPARD STEERING GEAR STANDARD - THREE YEAR WARRANTY	1	KMEM
W6-00-0254		PROPOSED - 5 YEAR MERITOR FRONT AXLE - WARRANTY	1	KMEM
W6-00-0258		PROPOSED - 5 YEAR MERITOR SINGLE AXLE REAR - WARRANTY	1	KMEM
W6-00-0320	>	PROPOSED - 10 YEAR CAB STRUCTURAL WARRANTY	1	KMEM

PART NO	S	DESCRIPTION	QTY	ID
W6-00-0330		PROPOSED - 10 YEAR BODY STRUCTURAL WARRANTY	1	KMEM
W6-00-0390		PROPOSED - 10 YEAR CAB & BODY CORROSION WARRANTY	1	KMEM
W6-00-0450		PROPOSED - PAINT FINISH WARRANTY, TEN (10) YEAR	1	KMEM
W6-00-0470		PROPOSED - 5 YEAR LETTERING WARRANTY	1	KMEM
W6-00-0490		PROPOSED - 10 YEAR STAINLESS STEEL PIPING WARRANTY	1	KMEM
W6-00-0500		PROPOSED - REAR SUSPENSION - LEAF SPRING - 1 YEAR WARRANTY	1	KMEM
W6-00-0570		PROPOSED - SAFEGUARD TECHNOLOGY - 10 YEAR - RUNG COVERS	1	KMEM
W6-00-0590		PROPOSED - 20 YEAR AERIAL LADDER WARRANTY	1	KMEM
W6-00-0655		> PROPOSED - TEN 10 YEAR AERIAL WATERWAY WARRANTY	1	KMEM
W6-00-0670		PROPOSED - AERIAL DEVICE REPAIR POLICY AND LIABILITY DISCLAIMER	1	KMEM
W6-00-0695		PRO - AERIAL DEVICE HYDRAULIC COMPONENT WARRANTIES	1	KMEM
W6-00-0710		PROPOSED - LIFETIME POLY TANK WARRANTY - ALL TANKS	1	KMEM
W6-00-0820		PROPOSED - WATEROUS 5 YEAR PUMP WARRANTY (PARTS & LABOR)	1	KMEM
W6-00-0823	**X**	WATEROUS FCAM 5 YR WARRANTY CORRECTION	1	
W6-00-1153	**S**	DEALER PROVIDES WARRANTY TRANSPORT PROP and REQ	1	DLR
W6-00-1330		PROPOSED - AKRON - 5 YEAR LIMITED WARRANTY	1	KMEM
W6-00-1340		PROPOSED - AKRON HEAVY DUTY VALVE - 10 YEAR WARRANTY	1	KMEM
W6-00-1530		PROPOSED - USSC SEATING 6 YEAR WARRANTY	1	KMEM
WA-00-0010		"AERIAL FIRE APPARATUS" NFPA 2016 STATEMENT OF EXCEPTIONS	1	KMEM

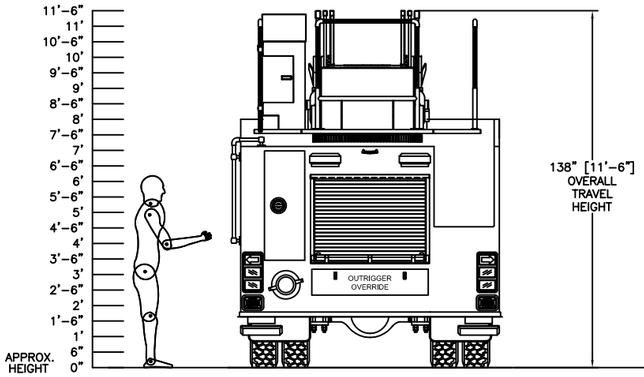

REAR VIEW

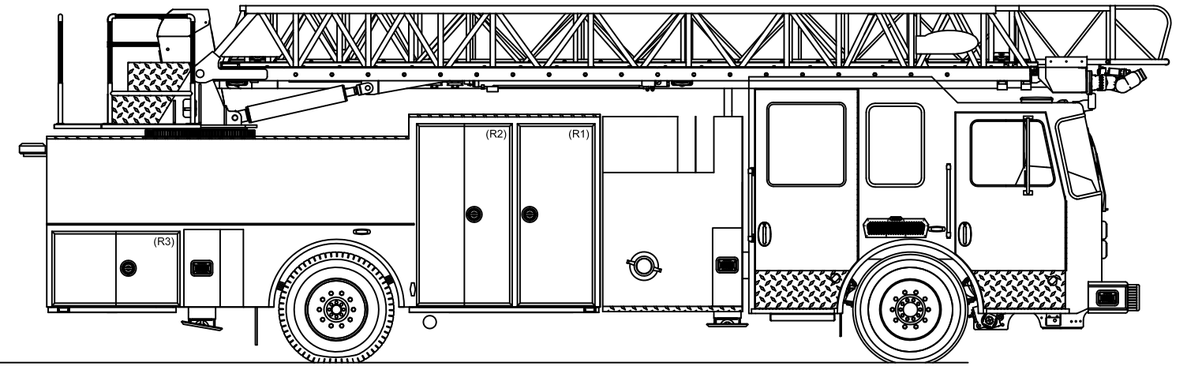

OFFICERS SIDE VIEW

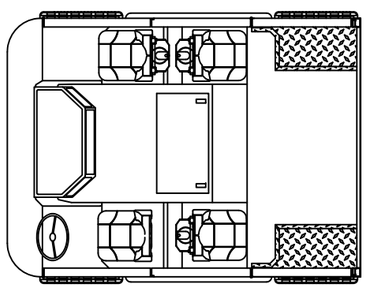

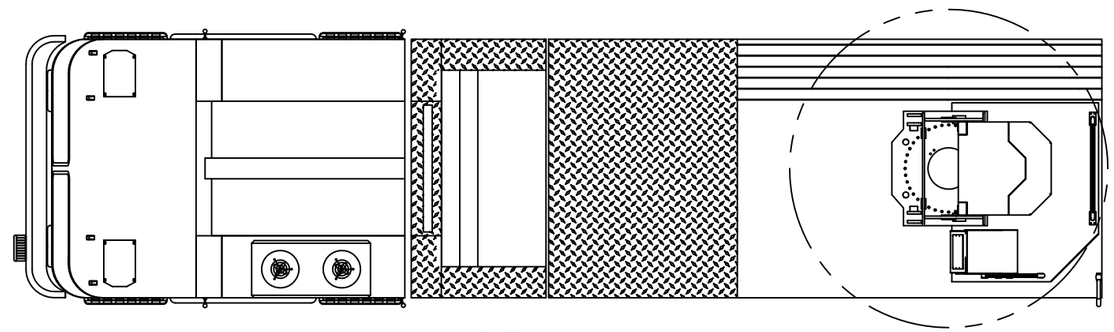

TOP VIEW

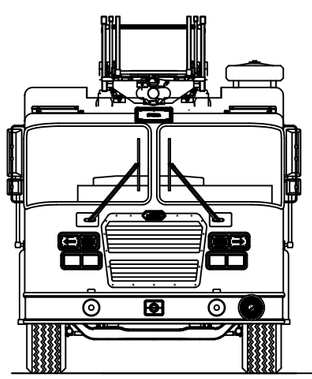

FRONT VIEW

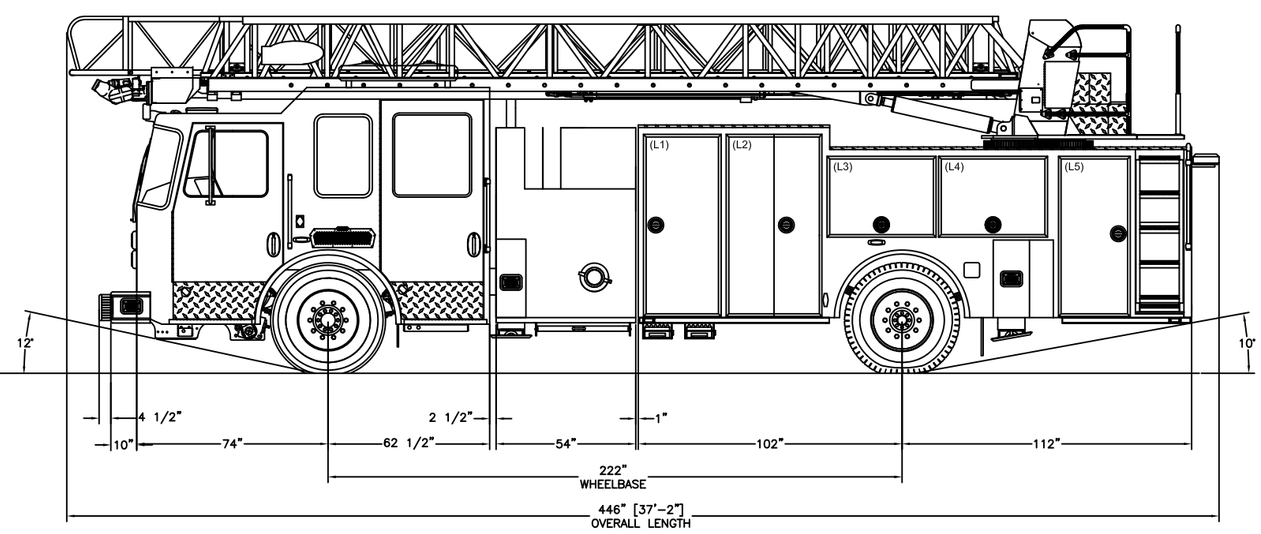

DRIVERS SIDE VIEW

CAB: 100"W PREDATOR MFD 10" RAISED ROOF
ENGINE & TRANS. CUMMINS ISL 450 HP/ 3000 EVS
AXLES: 23,000# FRONT/33,500# REAR
PUMP: WATEROUS CSU-C20; 2,000 GPM SINGLE STAGE
WATER TANK: 300 GALLONS

THIS DRAWING IS A GENERAL CONFIGURATION AND MAY NOT NECESSARILY REFLECT ALL CONTRACTUAL REQUIREMENTS. CONTRACT SPECIFICATIONS SHALL PREVAIL OVER DRAWING.

CUSTOMER APPROVAL:

NAME:

TITLE:

DATE:

SYM	DATE	REVISION DESCRIPTION	APP'D

SALES ENGINEER : TBD

DIMENSIONS ARE APPROXIMATE & MAY VARY DUE TO BUILD ADJUSTMENTS

SCALE	DWG SIZE	DRAWN BY	Z.ZSCHUNKE	DATE
NONE	B	APPROVED BY	P.HOHERCHAK	9-26-16

79' REAR MOUNT LADDER

MAPC 7 HIGH END

PROPOSAL DRAWING

KME
ONE INDUSTRIAL COMPLEX - NESQUEHONING, PA 18240

KME

FCAM HIGH END REAR MOUNT

109 FOOT AERIAL LADDER

"QUINT"

MAPC 8

Quote SO

MAPC/FCAM	MAPC 8 HIGH END 109' REAR MOUNT AERIAL QUIN

Sales Rep:

Terms:

Drawing #:
Est. Delivery Date: / /
Customer PO #:
Customer #:
QPF #:

Penalty:

Quote No: 10502-0007
10/04/2016

PART NO	S	DESCRIPTION	QTY	ID
		== REAR MOUNT LADDER - 713.016 07/13/16 ==	**1**	**KMEM**
		== LETTERING & STRIPING, 109-4-RM - 713.016 07/13/16 ==	**1**	**KMEM**
		== COMPARTMENT ACCESSORIES REARMOUNT AERIAL - 713.016 07/13/16 ==	**1**	**KMEM**
		== HD RM WITH PUMP GEN/ELEC AC - 713.016 07/13/16 ==	**1**	**KMEM**
		== MISC AND LOOSE EQUIPMENT (AERIAL) - 713.016 07/13/16 ==	**1**	**KMEM**
		== AERIAL WARRANTY PACKAGE W/PUMP - 713.016 07/13/16 ==	**1**	**KMEM**
		DEALER ======= DEALER ======= DEALER	**1**	**DLR**
		QUOTE DATA VERSION: 0713.016 - 2016 DATA SET	**1**	**KMEM**
		INDEX OF PART NUMBERS	**1**	**KMEM**
		****** HEADER - CONTRACTS, PROPOSAL FORM, ETC @ FRONT OF SPECS**	**1**	**KMEM**
		****** PROPOSED - AERIAL SPEC BOILERPLATE**	**1**	**KMEM**
04-00-0000		PROPOSED - GENERAL INFORMATION - NFPA 1901	1	KMEM
04-00-0033		PROPOSED - COMPLETION INFO	1	KMEM
04-00-0040		PROPOSED - FMVSS CERTIFICATION	1	KMEM
04-00-0060		PROPOSED - RECORDS	1	KMEM
04-00-0075		PROPOSED - TOP OF THE LINE CHASSIS MULTIPLEX	1	KMEM
04-00-0107		PROPOSED - GENERAL CONSTRUCTION - AERIAL	1	KMEM
04-00-0120		PROPOSED - SINGLE LINE RESPONSIBILITY	1	KMEM
04-00-0130		PROPOSED - PRODUCT LIABILITY - $30,000,000.00	1	KMEM
04-00-0170		PROPOSED - CRITERIA & CODE CONFORMANCE - AERIAL	1	KMEM
04-00-0193		PROPOSED - PAINT PERFORMANCE CERTIFICATION	1	KMEM
04-00-0490		PROPOSED - PRICES & PAYMENTS	1	KMEM
04-00-0540		PROPOSED - BOND REQUIREMENTS	1	KMEM
04-00-0560		PROPOSED - PERFORMANCE BOND	1	KMEM
04-00-0580		PROPOSED - NON-COLLUSION AGREEMENT	1	KMEM
04-00-0630		PROPOSED - MATERIAL & WORKMANSHIP	1	KMEM
04-00-0660		PROPOSED - CONTRACT SPECIALIST	1	KMEM
04-00-0680		PROPOSED - APPROVAL DRAWING	1	KMEM
04-00-1200		PROPOSED - DELIVERY	1	KMEM
04-00-1215		PROPOSED - INSTRUCTION MANUALS, TWO (2) SETS - CD	1	KMEM
04-00-1215	**X**	POWERPOINT DELIVERY - PROPOSAL FCAM AERIAL	1	
04-00-1300		PROPOSED - VEHICLE FLUIDS PLATE	1	KMEM

PART NO	S	DESCRIPTION	QTY	ID
04-00-1521	X	PROPOSED - KME and BULLDOG FAMA MEMBERSHIP	1	
04-00-1540		PROPOSED - MANUFACTURED IN THE UNITED STATES	1	KMEM
04-00-1550		PROPOSED - ISO 9001 QUALITY MANAGEMENT SYSTEM	1	KMEM
04-00-1570		PROPOSED - NFPA TREAD PLATE CERTIFICATION	1	KMEM
04-00-2440		PROPOSED - UNDERWRITERS LABORATORIES (UL) TESTING - AERIAL	1	KMEM
07-00-0015		"AERIAL FIRE APPARATUS" NFPA 2016 CHAPTERS OF COMPLIANCE	1	KMEM
08-00-0000		VEHICLE DATA PLATE DESCRIPTION	1	KMEM
14-00-0000		NFPA ROLLOVER STABILITY GENERAL STATEMENT	1	KMEM
15-00-0010	>	PROPOSED - PRINCIPAL APPARATUS DIMENSIONS & GVWR	1	KMEM
15-00-0050		!!! CRITICAL OVERALL HEIGHT REQUIREMENT !!! - "NO"	1	KMEM
15-00-0150		!!! CRITICAL OVERALL LENGTH REQUIREMENT !!! - "NO"	1	KMEM
AA-00-002A		SERVICE CENTER - PROPOSAL FCAM	1	DLR
BA-00-0045		<1> 109-MD-TA AERIALCAT LADDER	1	KMEM
BA-00-3000		SEAT AND SEAT BELT ANCHOR TESTING	1	KMEM
BA-02-0335		<2> RM PREDATOR - TANDEM AXLE - MD 109' RM	1	KMEM
BA-02-2305		<3> 140" TRAVEL HEIGHT - 109' MD	1	KMEM
BA-03-1420		<4> HI BODY, 109-HD-TA WITH PUMP	1	KMEM
BA-04-0555		AERIAL CHASSIS, REAR MOUNT PREDATOR -TANDEM AXLE (MEDIUM)	1	KMEM
		****** HEADER - 100" PREDATOR CAB ******	**1**	**KMEM**
BA-04-0805		PREDATOR CAB - BASE, 100"	1	KMEM
BA-04-0850		PREDATOR CAB - BASE - ALUMINUM CONSTRUCTION	1	KMEM
BA-04-0990		PREDATOR 100" - CRASH TESTING	1	KMEM
BA-04-0995		PREDATOR 100" - 120,000# ROOF & SIDE TESTING	1	KMEM
BA-04-1300		PREDATOR 100" - MFD CAB LENGTH (DIM - 62 1/2")	1	KMEM
BA-04-1800		PREDATOR 100" - DIMENSIONS FRONT SEATING & ENGINE ENCLOSURE - WIDE	1	KMEM
BA-04-4510		2010 - RM 10" RAISED ROOF 4" CENTER NOTCH & 2" WATERWAY NOTCH	1	KMEM
BA-05-0260		BATTERY ACCESS DOORS - REAR STEP WELLS, EACH SIDE	1	KMEM
BA-05-0610		BARRIER HEIGHT CAB DOORS, 100" PREDATOR "MFD, LFD & X-LFD"	1	KMEM
BA-05-0650		CAST ANTI-SLIP ENTRY STEPS FOR REDUCED LENGTH CAB DOORS	1	KMEM
BA-05-0700		CAB DOORS - BOLT ON WEATHER STRIP	1	KMEM
BA-05-1015		PREDATOR DOOR LATCHES, HD LOOP STYLE LATCH - BARRIER HEIGHT DOORS	1	KMEM
BA-05-1035		LOCKING CAB DOOR , OUT + IN, LOOP STYLE LATCH	1	KMEM
BA-05-1037		KEY MODEL #2001	1	KMEM
BA-05-1120		ELECTRIC WINDOWS, FOUR (4) DOORS, MFD, X-MFD, LFD CAB	1	KMEM
BA-05-1130		DOOR WINDOW TRIM EXTRUSION, 4 - DOOR	1	KMEM
BA-05-1325		FULL HEIGHT INTERIOR DOOR PANELS - BRUSH ALUM, 4 - DOOR	1	KMEM
BA-05-1510		SCOTCHLITE MATERIAL ON INTERIOR OF DOOR PANEL 4-DOORS	1	KMEM
		****** HEADER - CAB EXTERIOR ACCESSORIES & OPT, 100" PREDATOR**	**1**	**KMEM**
BA-05-2410		WINDSHIELD, 100" PREDATOR CAB	1	KMEM
BA-05-2425		WINDSHIELD WIPERS & WASHERS - 100" PREDATOR	1	KMEM
BA-05-2450		SIDE VIEWING WINDOWS NON-SLIDING - PREDATOR	1	KMEM
BA-05-2500		DARK TINT WINDOWS, SIDE VIEWING, REAR DOORS & REAR WALL	1	KMEM
BA-05-2600		GRAB RAILS EXTERIOR, KNURLED ALUMINUM EXTRUSION	1	KMEM
BA-05-2668		PREDATOR INTERIOR GRAB HANDLES - WHEELABRATED	1	KMEM
BA-05-2715		FRONT CAB GRILLE - FORMED STAINESS STEEL MIRROR FINISHED - 100" PREDATOR	1	KMEM
BA-05-2780		FRONT CAB GRILLE SCREEN - BLACK MESH - 100" PREDATOR/PANTHER	1	KMEM
BA-05-2815		SIDE CAB GRILLES - SHAPED BRIGHT FINISHED - 100" PREDATOR	1	KMEM
BA-05-2880		SIDE CAB GRILLE SCREEN - BLACK MESH - PREDATOR/PANTHER	1	KMEM
BA-05-2900		ALUMINUM CAB WHEEL LINERS	1	KMEM
BA-05-2915		STAINLESS STEEL CAB FENDERETTES	1	KMEM
BA-05-3000		FRONT MUD FLAPS	1	KMEM
BA-05-3500		VELVAC MIRRORS " WEST COAST" HEATED / REMOTE - W/CONVEX SPOT	1	KMEM
BA-05-3690		MIRROR CONTROL IN MULTIPLEX CONTROL SCREEN	1	KMEM
BA-05-5115		INTERIOR TRIM, 100" PREDATOR	1	KMEM
BA-05-5180		CUSTOM CAB INTERIOR PAINT - TEXTURED GRAY	1	KMEM
BA-05-5200		PREDATOR REAR INTERIOR CAB WALL, GRAY DURAWEAR UPHOLSTERY	1	KMEM
BA-05-5335		TREAD PLATE KICK PLATE ON LOWER INTERIOR REAR WALL	1	KMEM

PART NO	S	DESCRIPTION	QTY	ID
BA-05-5530	>	STORAGE COMPARTMENTS UNDER FRONT SEATS - 100" PREDATOR	1	KMEM
BA-05-5610		BARYFOL FLOORING	1	KMEM
BA-05-5650		1" ACOUSTICAL INSULATION	1	KMEM
BA-05-5820		ENGINE ENCLOSURE 100" PREDATOR (ABS VINYL)	1	KMEM
BA-05-5860		ENGINE ENCLOSURE MATERIAL - ALUMINUM CAB	1	KMEM
BA-05-7040		SUN VISORS, 100" PREDATOR CAB, PADDED VINYL	1	KMEM
BA-06-0500	>	TOP ROLLOVER PROTECTION SYSTEM W/SLAVE SENSOR - FIVE (5) OR MORE SEATS	1	KMEM
		****** HEADER - CAB SEATING & ACCESSORIES, 100" - PREDATOR MFD**	**1**	**KMEM**
		****** SEATING OPTIONS USSC, 100" - PREDATOR - MFD - ROLLTEK**	**1**	**KMEM**
BA-06-329J		DRIVERS SEAT, USSC AIR SUSPENSION, ABTS - SIDE CURTAIN AIRBAG	1	KMEM
BA-06-389N		OFFICERS SEAT, USSC - FIXED BASE, SCBA, ABTS - SIDE CURTAIN AIRBAG	1	KMEM
BA-06-3910		ZICO ULLH SCBA BOTTLE BRACKET - OFFICER'S SEAT	1	KMEM
		MFD CAB - REAR FACING USSC SEATS - ROLLTEK	**1**	**KMEM**
BA-06-414M		USSC SCBA ABTS REAR FACING, OUTBOARD, DS - SIDE CURTAIN AIRBAG	1	KMEM
BA-06-4180		ZICO ULLH SCBA BOTTLE BRACKET - OUTBOARD, DS	1	KMEM
BA-06-424M		USSC SCBA ABTS REAR FACING,OUTBOARD, OS - SIDE CURTAIN AIRBAG	1	KMEM
BA-06-4280		ZICO ULLH SCBA BOTTLE BRACKET - OUTBOARD, OS	1	KMEM
		MFD CAB - FORWARD FACING USSC SEATS - ROLLTEK	**1**	**KMEM**
BA-06-7200		**** DELETE FORWARD FACING SEAT RISER - NOT REQUIRED	1	KMEM
BA-06-8055		NO SCBA PARADE COVERS SUPPLIED	1	KMEM
BA-06-8150		USSC SEATING MATERIAL - BLACK CORDURA	1	KMEM
		****** HEADER - VEHICLE DATA RECORDER SYSTEMS**	**1**	**KMEM**
BA-06-9103	>	CLASS ONE SEAT BELT WARNING SYSTEM - UP TO 6 POSITIONS - ULTRAVIEW DISP	1	KMEM
BA-06-9115		FOUR (4) SEATING POSITIONS	1	KMEM
BA-06-9250	>	HELMET HOLDERS - IN CAB - ZICO	4	KMEM
BA-06-9310		CLASS ONE VEHICLE DATA RECORDER - MULTIPLEX	1	KMEM
		****** HEADER - CAB INTERIOR ACCESSORIES & OPTIONS, 100" PREDATOR**	**1**	**KMEM**
BA-07-7010	>	STANDARD #MATM RADIO ANTENNA INSTALLED	1	KMEM
		****** HEADER - INSTRUMENTATION & CONTROLS, 100" PREDATOR - WIDE**	**1**	**KMEM**
BA-08-0210		DASH & CENTER CONSOLE - 100" PREDATOR (ABS VINYL)	1	KMEM
BA-08-0273		INSTRUMENT PANEL, 100" PREDATOR - WIDE ABS	1	KMEM
BA-08-0300		INTER AXLE LOCK CONTROL SWITCH	1	KMEM
BA-08-0315		DIESEL EXHAUST FLUID LEVEL GAUGE	1	KMEM
BA-08-0320		ENGINE COMPRESSION BRAKE CONTROLS	1	KMEM
BA-08-0640		ULTRAVIEW 700 DISPLAY ON CAB DASH FOR ES-KEY SYSTEM	1	KMEM
BA-08-1220		INDICATOR CLUSTER, 100" PREDATOR	1	KMEM
BA-08-1225		"INTER AXLE LOCK" INDICATOR CLUSTER	1	KMEM
BA-08-1235		"ATC DISABLED" INDICATOR CLUSTER	1	KMEM
BA-08-1240		"ATC ACTIVE" INDICATOR CLUSTER	1	KMEM
BA-08-1265		"OUTRIGGERS NOT STOWED" INDICATOR ON DASH	1	KMEM
BA-08-1810	>	AUXILIARY SWITCH PANEL - LOWER DASH AREA	1	KMEM
BA-08-1900		PUMP SHIFT CONTROL ON LOWER LEFT DASH PANEL	1	KMEM
BA-08-1950		MULTIPLEX CONTROL PUMP SHIFT SWITCH - MULTIPLEX	1	KMEM
BA-08-2000		AERIAL LADDER, LADDER POWER/PTO SWITCHES IN CAB	1	KMEM
BA-08-2703		FLAT DASH IN FRONT OF OFFICER (ABS), 100" PREDATOR	1	KMEM
BA-08-2905		OVERHEAD ABS PANEL, FLAT FACED, 100" PREDATOR	1	KMEM
BA-08-4405		RM HEATER/ DEFROSTER & ACCESS, PREDATOR 10" RR W/TWO NOTCH	1	KMEM
BA-08-6900		HVAC CONTROL SYSTEM - INCOPORATED INTO MULTIPLEX CONTROL DISPLAY	1	KMEM
BA-08-9000		CAB TILT SYSTEM & OPTIONS	1	KMEM
BA-08-9010	>	AUXILIARY - MANUAL CAB LIFT BACKUP SYSTEM	1	KMEM
BA-08-9110		PARKING BRAKE/CAB TILT INTERLOCK	1	KMEM
		FRAME & AXLE PACKAGE, TANDEM AXLE CHASSIS (MEDIUM)	**1**	**KMEM**
BA-09-5200		110,000 PSI FRAME: AERIAL CHASSIS TRIPLE FRAME	1	KMEM
		HEADER - FRONT BUMPER, EXTENSIONS & ACCESSORIES	**1**	**KMEM**
BA-10-0050	>	BUMPER 12" STAINLESS STEEL CONTOUR - ALL CABS	1	KMEM
BA-10-0097		**** REQ 10" EXT MIN, MECH SIREN SEMI RECES. IN BUMPER, CENTER ****	1	KMEM
BA-10-0110		10" FRONT BUMPER EXTENSION WITH TREAD PLATE GRAVEL SHIELD	1	KMEM

PART NO	S	DESCRIPTION	QTY	ID
BA-10-0405		TREADPLATE GRAVEL SHIELD STANDARD INSTALLATION	1	KMEM
BA-10-2010		TWO (2) PAINTED TOW HOOKS BELOW FRONT BUMPER	1	KMEM
BA-10-5000		AERIAL TRAVEL SUPPORT FOR ANY REAR MOUNT TYPE AERIAL	1	KMEM
BA-14-0170		23,000# FRONT AXLE MERITOR MFS-20-133A-N	1	KMEM
BA-14-1110		MERITOR, EX-225 17" DISC BRAKES, FRONT AXLE, W/ AUTO SLACK ADJUSTMENT	1	KMEM
BA-14-2040		SUSPENSION FRONT - 23,000# AXLES	1	KMEM
BA-14-2095		**AERIAL DEVICE TRAVEL HEIGHT CRITICAL!!!! ** REQUIRES SMALL AXLE SPACER	1	KMEM
BA-14-2110		FRONT AXLE SHOCK ABSORBERS - MONROE "MAGNUM - 70"	1	KMEM
BA-15-1050		54,000# TANDEM REAR AXLE MERITOR RT-52-185	1	KMEM
BA-15-1505		16.5" X 8.6" S-CAM BRAKES - MERITOR REAR TANDEM W/ AUTO SLACK ADJ.	1	KMEM
BA-15-2810		VEHICLE TOP SPEED - 2016 NFPA STATEMENT	1	KMEM
BA-15-4827	>	HENDRICKSON FIREMAAX, FMX-542 AIR RIDE , TA 54,000#	1	KMEM
		****** HEADER - BRAKE SYSTEM, TANDEM AXLE VEHICLE**	**1**	**KMEM**
BA-20-1005		BRAKE SYSTEM, TA CHASSIS	1	KMEM
BA-20-1110		ABS BRAKING FOR TANDEM REAR AXLE CHASSIS	1	KMEM
BA-20-1275	>	ELECTRONIC STABILITY CONTROL (ESC) WITH (ATC) - CUSTOM TA	1	KMEM
BA-20-1530		AIR RESERVOIRS 7100 CU IN TA, BASE	1	KMEM
BA-20-1810		STAINLESS STEEL AIR TANK BRACKETS - (4 TANKS)	1	KMEM
BA-20-2025		1/4 TURN DRAIN VALVES ON ALL AIR TANKS	1	KMEM
BA-20-3000		AIR DRYER, HEATED - BENDIX AD-9 12VOLT	1	KMEM
BA-20-5005		COLOR CODED SYNFLEX BRAKE LINES W/QUICK RELEASE FITTINGS - TA	1	KMEM
BA-20-5500		AIR COMPRESSOR -WABCO 18.7 CFM- STD. FOR ALL CUMMINS ENGINES	1	KMEM
BA-20-5810		BRAKE TREADLE VALVE	1	KMEM
BA-20-6010		PARKING BRAKE CONTROL - NEAR DRIVER - ALL WHEEL LOCK	1	KMEM
		HEADER, TIRE AND WHEEL OPTIONS	**1**	**KMEM**
		HEADER, WHEELS, 23,000 FRONT AXLE - ALUMINUM	**1**	**KMEM**
BA-25-1040		FRONT WHEELS, POLISHED ALUMINUM, 22.5 X 13, 24,390#	1	KMEM
BA-25-1045		FRONT WHEELS, LUG AND HUB TRIM (ALUMINUM WHEELS)	1	KMEM
BA-25-2030	>	FRONT, GOODYEAR 425/65R22.5 L 24,400# G296 MSA MIXED - 68MPH	1	KMEM
BA-25-2400		GOODYEAR - FIRE SERVICE RATING - TIRE RESTRICTIONS	1	KMEM
		HEADER, TIRES & WHEELS, 54,000 TANDEM REAR AXLE	**1**	**KMEM**
BA-25-5090		REAR WHEELS, POLISHED ALUMINUM, 22.5 X 9, TA	1	KMEM
BA-25-5115		REAR WHEELS, LUG AND HUB TRIM, TA (ALUMINUM)	1	KMEM
BA-25-7055	>	REAR, GDYR 315/80R22.5 J 64,000# RHD II+ TRACTION - 75MPH, TA	1	KMEM
BA-25-7400		GOODYEAR - FIRE SERVICE RATING - TIRE RESTRICTIONS	1	KMEM
BA-25-9905		TIRE PRESSURE MONITORING - LED VALVE STEM CAPS - TEN TIRES	1	KMEM
		100" PREDATOR - ENGINE PACKAGE, HEAVY TANDEM AXLE CHASSIS	**1**	**KMEM**
		****** 100" - HEADER, ENGINE & ENGINE COMPONENTS**	**1**	**KMEM**
BA-30-2215		CUMMINS ISX15 - 500 HP @ 1600 RPM TQ 1850 lb-ft @ 1200 - PREDATOR WIDE	1	KMEM
BA-30-9810		PROPOSED - ENGINE CERTIFICATION CUSTOM CHASSIS	1	KMEM
BA-32-0030		COOLING/RADIATOR, 100" PREDATOR - WIDE	1	KMEM
BA-32-0070		ENGINE COOLANT FILTER - CUMMINS ISC - ISX	1	KMEM
BA-32-0085		COOLING SYSTEM CRITERIA	1	KMEM
BA-32-0100		TRANSMISSION COOLER	1	KMEM
BA-32-0120		RADIATOR SKID PLATE	1	KMEM
BA-32-0180		CHARGED AIR COOLER (STACK MOUNT), 100" PREDATOR CAB	1	KMEM
BA-32-0250		COOLANT FAN, W/CLUTCH - CUMMINS ISX15	1	KMEM
BA-32-0340		HEATER AND COOLANT HOSES/PIPING	1	KMEM
BA-32-0420		LOW COOLANT INDICATOR LIGHT AND ALARM IN CAB	1	KMEM
BA-33-0020	>	SECONDARY BRAKING - ENGINE COMPRESSION BRAKE	1	KMEM
BA-33-0150		FAST IDLE CONTROL FOR ALL ELECTRONIC ENGINES - SMART WHEEL	1	KMEM
BA-33-0160		ENGINE AIR CLEANER	1	KMEM
BA-33-0180		SPARK ARRESTOR	1	KMEM
BA-33-0200		ACCELERATOR PEDAL - FLOOR MOUNT	1	KMEM
BA-33-0250		REMOTE THROTTLE & INTERLOCK HARNESS	1	KMEM
BA-40-0300		ALLISON 4000EVS TRANS. - COMPRESSION BRAKE	1	KMEM

PART NO	S	DESCRIPTION	QTY	ID
BA-40-0660		FIVE (5) SPEED AUTOMATIC TRANSMISSION - 4000 SERIES	1	KMEM
BA-40-0700		ALLISON TRANSMISSIONS, ELECTRONIC TOUCH PAD SHIFTER IN CAB	1	KMEM
BA-40-0855		TRANSMISSION OIL LEVEL SENSOR	1	KMEM
BA-40-0860		ALLISON PARK TO NEUTRAL	1	KMEM
BA-40-0910		ALLISON PRESELECT PROGRAMMING	1	KMEM
BA-40-0920		PRESELECT PROGRAMMED FOR 4TH GEAR	1	KMEM
BA-40-4720		TES-389 TRANS FLUID 4000EVS TRANSMISSION	1	KMEM
BA-45-0110		DRIVE LINES DANA-SPICER #1810 SERIES	1	KMEM
BA-49-0100		DIESEL EXHAUST FLUID TANK - 5 GALLON	1	KMEM
BA-50-0110		EXHAUST SYSTEM - DPF & SCR SYSTEM - INLINE SYSTEM	1	KMEM
BA-50-0155		ALUMINIZED STEEL EXHAUST TAILPIPE/OUTLET OS - DPF + SCR SYSTEM	1	KMEM
BA-50-2500		FUEL SYSTEM	1	KMEM
BA-50-2510		FUEL TANK - 65 GALLON, STEEL	1	KMEM
BA-50-2600		STAINLESS STEEL FUEL TANK STRAPS IN LIEU OF STEEL	1	KMEM
BA-50-2625		FUEL LINES - FIBER REINFORCED HOSE	1	KMEM
BA-50-2635		FUEL LINE SHUT-OFF VALVE	1	KMEM
BA-50-2645	>	CUMMINS FUEL-WATER SEPARATOR	1	KMEM
BA-50-2670		FUEL PUMP SECONDARY ELECTRIC, REQ. ON 210" W-B OR LONGER	1	KMEM
BA-50-2700		FUEL POCKET, LEFT SIDE REAR WHEEL WELL PANEL	1	KMEM
BA-50-5050	>	STEERING - DUAL SHEPPARD POWER STEERING GEARS	1	KMEM
BA-50-7110		STEERING COLUMN - CLOCK SPRING	1	KMEM
BA-50-7150		18" STEERING WHEEL - 4 SPOKE	1	KMEM
BA-50-7170		SMART WHEEL CONTROLS ON STEERING WHEEL	1	KMEM
BA-50-7202	>	DELETE - 4FRONT - FRONTAL AIR BAG PROTECTION SYSTEM IN STEERING WHEEL	1	KMEM
BA-50-9000		ROAD SAFETY KITS	1	KMEM
		****** HEADER, RM LADDER CHASSIS ELECTRICAL, 100" PREDATOR (OPTIONS)**	**1**	**KMEM**
		****** HEADER, RM LADDER W/ PUMP BODY ELECTRICAL (OPTIONS)**	**1**	**KMEM**
BE-01-0005		PREDATOR CHASSIS ELECTRICAL SYSTEM DESCRIPTION	1	KMEM
BE-01-0105		PREDATOR CHASSIS WIRING INSTALLATION	1	KMEM
BE-01-0150		DIRECT BATTERY GROUNDING STRAP - PREDATOR	1	KMEM
BE-01-0153		EMI/RFI PROTECTION	1	KMEM
BE-01-0205		PREDATOR 12 VOLT ELECTRICAL SYSTEM TESTING	1	KMEM
BE-05-0353		CLASS-1 ES-KEY MULTI-PLEXED ELECTRICAL SYSTEM 100" PREDATOR	1	KMEM
BE-05-0460		CLASS-1 ES-KEY ULTRAVIEW 700 DISPLAY	1	KMEM
BE-05-0800		INTER-LOCK MODULE FOR MULTIPLEX SYSTEM	1	KMEM
BE-05-0810		WELDON SWIVEL MOUNTING BRACKET FOR CONTROL SCREEN	1	KMEM
BE-05-0900		CHASSIS DIAGNOSTICS SYSTEM	1	KMEM
BE-05-1160		VOLTAGE MONITORING SYSTEM - 12 VOLT	1	KMEM
BE-05-1165		INDICATOR LIGHT AND ALARM PROVE-OUT SYSTEM	1	KMEM
BE-05-1170		SEQUENCER	1	KMEM
BE-05-1175		ELECTRICAL HARNESS INSTALLATION - 12 VOLT	1	KMEM
BE-10-0487		DELCO REMY 40SI, 320 AMP BRUSHLESS ALTERNATOR	1	KMEM
BE-15-0730		BATTERIES - SIX (6) EXIDE GROUP 31, 925CCA	1	KMEM
BE-15-1105		PREDATOR BATTERY STORAGE, STEEL, MFD, XMFD, LFD, XLFD	1	KMEM
BE-15-1500		BATTERY DISCONNECT SWITCH, ALL UNITS	1	KMEM
BE-15-1555		COLE HERSEE BATTERY JUMPER STUDS, DS BATTERY BOX	1	KMEM
BE-20-1635		120 VOLT 20 AMP SUPER AUTO EJECT FOR BATT CHARGER - CUSTOM	1	KMEM
BE-20-1715		SHORELINE RECEPTACLE LABEL - NFPA	1	KMEM
BE-20-1720		RED COVER FOR KUSSMAUL AUTO-EJECT RECEPTACLE, #091-55RD	1	KMEM
BE-20-1750		SHORELINE LOCATION - ADJACENT TO DRIVER'S DOOR	1	KMEM
BE-20-2000		KUSSMAUL MODEL 1200, 40AMP, BATTERY CHARGER	1	KMEM
BE-30-2750		CONTROL SWITCHING THROUGH MULTIPLEX TOUCH SCREENS	1	KMEM
BF-00-0515		WELDON #8080-8000-13 WHITE/RED LED INTERIOR LIGHTS (4)	1	KMEM
BF-00-5000		DOOR OPEN INDICATOR W/ INTEGRAL AUDIBLE ALARM	1	KMEM
		****** HEADER, 12V POWER/ USB CHARGING/ POWER - GROUND CIRCUITS, CUSTOM ******	**1**	**KMEM**
BF-01-6000		12 VOLT POWER AND GROUND CIRCUIT FOR ACCESSORIES IN DASH	1	KMEM
		****** HEADER, REAR/SIDE VISION CAMERA SYSTEMS ******	**1**	**KMEM**

PART NO	S	DESCRIPTION	QTY	ID
BF-20-0045		DUAL HEADLIGHTS, LED, PREDATOR - J.W. SPEAKER - DUAL BEZELS	1	KMEM
BF-20-0320		DAYTIME RUNNING LIGHTS, ALL CABS	1	KMEM
BG-00-0055		DUAL MODULE w/ CODE 3 65STA LED TURN SIGNAL & REQ WARN LIGHT	1	KMEM
BG-00-0400		CUST RM LADDER CHASSIS LED MARKER LIGHTS	1	KMEM
BG-00-0500		CUST RM LADDER BODY LED MARKER LIGHTS	1	KMEM
BG-00-1210		WELDON #9186 LED MARKER LIGHTS @ FRONT ROOF EDGE OF CAB	1	KMEM
BG-00-1600		TRUCK-LITE MARKER LIGHTS @ EA SIDE OF CAB, ADJACENT TO DRIVER DOOR	1	KMEM
BG-00-1610		TRUCK-LITE MARKER/TURN LIGHTS @ EA SIDE OF BODY	1	KMEM
BG-00-1660		TRUCK-LITE MARKER LIGHTS @ REAR OF BODY	1	KMEM
BG-00-1800		TRUCK-LITE DOT AMBER REFLECTORS @ SIDE OF BODY	1	KMEM
BG-00-1810		TRUCK-LITE DOT RED REFLECTORS @ REAR OF BODY	1	KMEM
BG-00-2915		TECNIQ #L10 LED LICENSE PLATE LIGHT @ DS REAR OF BODY	1	KMEM
BG-02-2520		CODE 3, #65 LED BRAKE, REVERSE, & TURN	1	KMEM
BH-04-1050		CAB STEP LIGHTS, TECNIQ EON 3 LED, ALL DEVICES	4	KMEM
BH-04-1130		BODY STEP LIGHTS, TECNIQ EON 3 LED, ALL DEVICES	4	KMEM
BH-05-1625		DUNNAGE AREA LIGHTING, TECNIQ EON 3 LED	1	KMEM
BH-05-2300		AERIAL ACCESS LADDER ILLUMINATION - WHELEN 3" LED - RM BODY	1	KMEM
	>	****** HEADER, HOSE BED LIGHTING ******	**1**	**KMEM**
BH-06-0100		UNITY HOSE BED LIGHTS, ALL DEVICES	1	KMEM
BH-06-2200		HOSE BED WORK LIGHT - SWITCH	1	KMEM
		****** HEADER, SCENE LIGHTS - CUSTOM CHASSIS ******	**1**	**KMEM**
		****** HEADER, SCENE LIGHTS - LADDER/PLATFORM W/ PUMP**	**1**	**KMEM**
BH-11-0500		NFPA (4) JW SPEAKER LED RECTANGLE GROUND LIGHTS, BELOW CAB DOORS	1	KMEM
BH-11-0540		GROUND LIGHTS, 2 LED UNDER FRONT BUMPER FACING FORWARD - RH	1	KMEM
BH-11-0560		GROUND LIGHTS, 2 LED BELOW PUMP PANEL RUNNING BOARD - RH	1	KMEM
BH-11-0585		GROUND LIGHTS, 2 LED, AT REAR BODY CORNERS - RH	1	KMEM
BH-11-3750		CAB AND BODY GROUND LIGHTS ACTIVATE WITH PARKING BRAKE	1	KMEM
BH-11-3765		CAB AND BODY GROUND LIGHTS - SWITCH @ IN CAB	1	KMEM
		****** HEADER, BROW AND CAB RADIUS LIGHTS - CUSTOM CHASSIS**	**1**	**KMEM**
		****** HEADER, TELESCOPING LIGHTS, REAR OF CAB - CUSTOM CHASSIS**	**1**	**KMEM**
BH-12-2210		FRC BROW LIGHT, SPECTRA LED, 155W12V, (2) ABOVE WINDSHIELD	1	KMEM
BH-14-0020		CONTROL SWITCH IN CAB FOR LIGHT(S) ABOVE WINDSHIELD	1	KMEM
BH-20-0020		WIRE UPGRADE FOR 12V HIGH AMP LIGHTS - (2) BROW LIGHTS	1	KMEM
BI-00-0200		AERIAL BODY ELECTRICAL SYSTEM	1	KMEM
BI-00-0205		AERIAL BODY ELECTRICAL JUNCTION COMPARTMENT	1	KMEM
BI-00-0210		REAR-MOUNT, AERIAL DEVICE ELECTRICAL JUNCTION COMPARTMENT	1	KMEM
BI-00-0525		BODY ELECTRICAL HARNESS - ES-KEY	1	KMEM
BJ-00-5115		PUMP ENCLOSURE WORK LIGHTS - TECNIQ LED	1	KMEM
BJ-00-5165		ENGINE COMPARTMENT WORK LIGHTS - TECNIQ LED	1	KMEM
		COMPARTMENT LIGHTS - AERIAL TANDEM AXLE	**1**	**KMEM**
BJ-02-1055	>	COMPT. LIGHTS, TECNIQ E18 LED	12	KMEM
		****** HEADER, 12V BODY FLOOD LIGHTING - RM LAD/PLAT/WT W/ PUMP ******	**1**	**KMEM**
		****** CUSTOM REAR MOUNT AERIAL NFPA WARNING LIGHT PACKAGE**	**1**	**KMEM**
BL-95-0000		NFPA COMPLIANT WARNING LIGHT PACKAGE - ALL UNITS	1	KMEM
BL-95-0100		LIGHT PACKAGE ACTUATION/CONTROLS - ALL UNITS	1	KMEM
BL-98-0000		WARNING LIGHT FLASH PATTERN - NFPA FLASH PATTERN	1	KMEM
BM-00-0200		CODE 3 UPPER PACKAGE - CUSTOM REAR MOUNT AERIAL	1	KMEM
BM-01-0505	>	LIGHTBAR RISER FOR SCENE LIGHT CLEARANCE	1	KMEM
BM-02-0090		A-UPPER, CODE 3 LED DF23ANFPA1, DEFENDER 23" TRICORE BAR, PAIR	1	KMEM
BM-02-1038		C-UPPER, CODE 3 LED 10" PRIZM II, DUOBEAM II - CLEAR LENS	1	KMEM
BM-02-2000		B/D-UPPER REAR, COVERED BY LIGHTS IN ZONE C-UPPER	1	KMEM
BM-02-3000		B/D-UPPER FRONT, COVERED BY LIGHTS IN ZONE A-UPPER	1	KMEM
BM-07-0200		CODE 3 LOWER PACKAGE - CUSTOM REAR MOUNT AERIAL	1	KMEM
BM-09-0018	>	A-LOWER FRONT, CODE 3 65 SERIES LED	1	KMEM
BM-09-0098		A-LOWER FRONT MOUNTING, CUSTOM CHASSIS	1	KMEM
BM-09-1014	>	C-LOWER REAR, CODE 3 65 SERIES LED	1	KMEM
BM-09-2006	>	B/D-LOWER FRONT, CODE 3 65 SERIES LED	1	KMEM
BM-09-2098		B/D-LOWER FRONT MOUNTING, CUSTOM CHASSIS	1	KMEM

PART NO	S	DESCRIPTION	QTY	ID
BM-09-3006	>	B/D-LOWER MID, CODE 3 65 SERIES LED	1	KMEM
BM-09-3506	>	B/D-LOWER SECONDARY MID, CODE 3 65 SERIES LED	1	KMEM
BM-09-4006	>	B/D-LOWER REAR, CODE 3 65 SERIES LED	1	KMEM
BM-15-0000		LIGHT PACKAGE NFPA CERTIFICATION - ALL UNITS	1	KMEM
		****** HEADER, OPTIONAL WARNING LIGHTS**	**1**	**KMEM**
		****** HEADER, AUDIBLE WARNING & COMMUNICATION EQUIPMENT**	**1**	**KMEM**
BW-00-0510		CHASSIS SINGLE ELECTRIC (DOT) HORN	1	KMEM
BW-00-0560		CODE 3, #CA278, BACK-UP ALARM - 87DBA	1	KMEM
BW-00-5000	>	DUAL CHROME AIR HORNS	1	KMEM
BW-00-5100		DUAL AIR HORNS RECESSED IN FRONT BUMPER, STD	1	KMEM
BW-00-5200		AIR HORN CTRL - FOOT FOR OFFICER & STEERING WHEEL FOR DRIVER	1	KMEM
BW-01-0120		SIREN, WHELEN # 295HFS2, 100W - FLUSH MOUNT	1	KMEM
BW-01-1000		ONE (1) WHELEN SP123BMC SPEAKER	1	KMEM
BW-02-0000	>	FEDERAL Q2B SIREN @ CAB FRONT	1	KMEM
BW-02-0035		Q2B MOUNT - SEMI-RECESSED INTO CENTER OF BUMPER	1	KMEM
BW-02-2000		SIREN CONTROL - FLOOR SWITCH, DRIVER AND OFFICER	1	KMEM
		****** HEADER, PUMP, TANK & ACC, 109' MD 4-SECT, TA RM, X-HI**	**1**	**KMEM**
DC-00-2345		WATEROUS CSU-C20-2000 SINGLE STAGE PUMP	1	KMEM
DC-01-4600		WATEROUS PUMP PACKING	1	KMEM
DC-01-610A	>	*** ISX-15 ENGINE HAS HIGH TORQUE RATING - "K" GEARBOX IS REQUIRED W/HALE PUMP *	1	KMEM
DC-01-6210		WATEROUS "C20" PUMP DRIVE UNIT, ALL WATEROUS MID-SHIP PUMPS	1	KMEM
DC-01-6490		PUMP RATIO (HALE, WATEROUS OR DARLEY)	1	KMEM
DC-01-7140		WATEROUS AIR SHIFT	1	KMEM
DC-01-8590		PUMP SHIFT MANUAL OVERRIDE (HALE, WATEROUS OR DARLEY)	1	KMEM
DC-01-8615		WATEROUS PUMP SHIFT INDICATOR LIGHTS	1	KMEM
DC-01-9020		TRANSMISSION LOCK-UP (HALE, WATEROUS OR DARLEY)	1	KMEM
DC-02-1900		PUMP MOUNTS - MID-SHIP PUMPS	1	KMEM
DC-02-1990		PUMP INSTALLATION - CUSTOM	1	KMEM
		****** HEADER, WATEROUS CSU, CMU, PRESSURE CONTROL**	**1**	**KMEM**
DC-05-1226		FIRE RESEARCH "IN CONTROL" TGA-400 PRESSURE GOVERNOR	1	KMEM
DC-05-1295		TASK FORCE TIPS #A18 SERIES INTAKE RELIEF VALVE	1	KMEM
DC-05-2500		PUMP UL CERTIFICATION - 750 GPM & UP	1	KMEM
		WATEROUS, PUMP PRIMING PUMP AND CONTROLS	**1**	**KMEM**
DC-05-3680	>	TRIDENT "MANUAL" AIR PRIMING SYSTEM	1	KMEM
		WATEROUS, DRAINS & ACCESSORES	**1**	**KMEM**
DC-05-5110		ROTARY MASTER DRAIN VALVE	1	KMEM
DC-05-5400		DRAINS/BLEEDER "INNOVATIVE CONTROLS" LIFT UP @ ALL 1-1/2" OR LARGER	1	KMEM
DC-05-5500		SYNFLEX SUCTION, DISCHARGE, PRESSURE AND CONTROL LINES	1	KMEM
DC-05-6220		WATEROUS ANODE BLOCKS - 2 TOTAL	1	KMEM
DC-10-2002		SIDE MOUNT PUMP MODULE, MD, RM AERIAL	1	KMEM
DC-10-2500		PUMP MODULE - STEEL CONSTRUCTION	1	KMEM
		****** HEADER, SUCTIONS - REARMOUNT TA-MD, SIDE MOUNT**	**1**	**KMEM**
DC-14-3230		WATEROUS MAIN SUCTION INLETS 6" NST, 2000 GPM CSU PUMP	1	KMEM
DC-14-5300		SHORT NECK MAIN PUMP SUCTION INLETS - DS & OS	1	KMEM
DC-14-5560	>	6" NST MAIN PUMP SUCTION PRESSURE VENTED CAPS (2)	1	KMEM
		HEADER - AUXILIARY SUCTION/S - AERIALS	**1**	**KMEM**
DC-20-1000		2 1/2" AUX. SIDE SUCTION @ DS PANEL TO REAR OF MAIN INLET	1	KMEM
DC-20-1100		2 1/2" AKRON #8800 S.S. BALL VALVE, DS REAR AUX SUCTION	1	KMEM
DC-20-1200		SWING CONTROL @ VALVE, DS REAR AUX SUCTION	1	KMEM
DC-20-9500		BEHIND PANEL MOUNT	1	KMEM
		****** HEADER - TANK TO PUMP - MD REARMOUNTS**	**1**	**KMEM**
DC-25-1200		TANK TO PUMP - 3" VALVE - LADDERS & PLATFORMS	1	KMEM
DC-25-3110		3" AKRON #8800 SERIES - S.S. BALL, VALVE , TANK TO PUMP	1	KMEM
DC-25-5110		3" PUSH/PULL CONTROL FOR TANK TO PUMP	1	KMEM
		****** HEADER - TANK FILL - MD REARMOUNT**	**1**	**KMEM**
DC-30-2100		TANK FILL LINE 2" FROM PUMP - SIDE MOUNT	1	KMEM
DC-30-2300		2" AKRON #8800 SERIES - S.S. BALL TANK FILL, SIDE MOUN	1	KMEM
DC-30-6500		PUSH/PULL CONTROL FOR TANK FILL	1	KMEM

PART NO	S	DESCRIPTION	QTY	ID
		****** DISCHARGES & ACCESSORIES, RM-TA-MD AERIAL - SIDE MOUNT**	**1**	**KMEM**
		DRIVER'S SIDE #1 MAIN DISCHARGE	**1**	**KMEM**
DC-35-0010		DS MAIN DISCHARGE #1 - SIDE MOUNT	1	KMEM
DC-35-0110		2 1/2" AKRON #8800 SERIES - S.S. BALL, DS #1, SIDE MOUNT	1	KMEM
DC-35-1815		DS #1 DISCH - 2 1/2" STRAIGHT NST & 30-DEGREE NST ELBOW	1	KMEM
DC-35-2010		2 1/2" NST PRESSURE VENTED CAP - DS DISCHARGE #1	1	KMEM
DC-35-2410		PUSH/PULL CONTROL FOR DS DISCHARGE #1 -SIDE MOUNT	1	KMEM
DC-35-3110		INNOVATIVE CONTROLS LIQUID FILLED 2 1/2" PRESS GAUGE SS- DS DISCHARGE #1	1	KMEM
		DRIVER'S SIDE #2 MAIN DISCHARGE	**1**	**KMEM**
DC-35-5010		DS MAIN DISCHARGE #2 - SIDE MOUNT	1	KMEM
DC-35-5110		2 1/2" AKRON #8800 SERIES - S.S. BALL, DS #2, SIDE MOUNT	1	KMEM
DC-35-6815		DS #2 DISCH - 2 1/2" STRAIGHT NST & 30-DEGREE NST ELBOW	1	KMEM
DC-35-7010		2 1/2" NST PRESSURE VENTED CAP - DS DISCHARGE #2	1	KMEM
DC-35-7410		PUSH/PULL CONTROL FOR DS DISCHARGE #2 -SIDE MOUNT	1	KMEM
DC-35-8110		INNOVATIVE CONTROLS LIQUID FILLED 2 1/2" PRESS GAUGE SS- DS DISCHARGE #2	1	KMEM
		OFFICER'S SIDE #1 MAIN DISCHARGE	**1**	**KMEM**
DC-39-0010	>	OS MAIN DISCHARGE #1 - SIDE MOUNT	1	KMEM
DC-39-0110		2 1/2" AKRON #8800 SERIES - S.S. BALL, OS #1, SIDE MOUNT	1	KMEM
DC-39-1815		OS #1 DISCH - 2 1/2" STRAIGHT NST & 30-DEGREE NST ELBOW	1	KMEM
DC-39-2010		2 1/2" NST PRESSURE VENTED CAP - OS DISCHARGE #1	1	KMEM
DC-39-2410		PUSH/PULL CONTROL FOR OS DISCHARGE #1 -SIDE MOUNT	1	KMEM
DC-39-3110		INNOVATIVE CONTROLS LIQUID FILLED 2 1/2" PRESS GAUGE SS- OS DISCHARGE #1	1	KMEM
		OFFICER'S SIDE #2 MAIN DISCHARGE	**1**	**KMEM**
DC-39-5010	>	OS MAIN DISCHARGE #2 - SIDE MOUNT	1	KMEM
DC-39-5080	>	**** WATEROUS PUMP LDH DISCHARGE PORT ****	1	KMEM
DC-39-5130	>	4" AKRON #8840 VALVE, OS #2, SIDE MOUNT	1	KMEM
DC-39-6860		OS #2 DISCH - 4" STRAIGHT NST & 30-DEGREE NST ELBOW	1	KMEM
DC-39-7045		DELETE 4" NST CAP - OS DISCHARGE #2	1	KMEM
DC-39-7310		4" NSTF X 4" STORZ STRAIGHT KOCHEK S37S ADAPTER WITH CAP OS DIS	1	KMEM
DC-39-7810	>	AKRON HANDWHEEL GEAR VALVE CONTROL, OS DISCHARGE #2	1	KMEM
DC-39-8110		INNOVATIVE CONTROLS LIQUID FILLED 2 1/2" PRESS GAUGE SS- OS DISCHARGE #2	1	KMEM
		CROSSLAY #1 DISCHARGE	**1**	**KMEM**
DC-47-0400		CROSSLAY #1, 1 1/2" - AERIAL	1	KMEM
DC-47-1110		CROSSLAY #1 CAPACITY - 200' OF 1 3/4" HOSE	1	KMEM
DC-47-1410		CROSSLAY #1 - DOUBLE STACK HOSE DESIGN	1	KMEM
DC-47-1510		1 1/2" NST CHICKSAN SWIVEL - CROSSLAY #1	1	KMEM
DC-47-2110		CROSSLAY #1, PLUMBING, 2" STAINLESS STEEL PIPING	1	KMEM
DC-47-2210		2" AKRON #8800 SERIES - S.S. BALL, VALVE CROSSLAY #1, DISCH	1	KMEM
DC-47-2610		PUSH/PULL 1/4 TURN CONTROL CROSSLAY #1	1	KMEM
DC-47-3210		INNOVATIVE CONTROLS LIQUID FILLED 2 1/2" PRESS GAUGE SS - CROSSLAY #1	1	KMEM
		CROSSLAY #2 DISCHARGE	**1**	**KMEM**
DC-47-5400		CROSSLAY #2, 1 1/2" - AERIAL	1	KMEM
DC-47-6110		CROSSLAY #2 CAPACITY - 200' OF 1 3/4" HOSE	1	KMEM
DC-47-6410		CROSSLAY #2 - DOUBLE STACK HOSE DESIGN	1	KMEM
DC-47-6510		1 1/2" NST CHICKSAN SWIVEL - CROSSLAY #2	1	KMEM
DC-47-7110		CROSSLAY #2, PLUMBING, 2" STAINLESS STEEL PIPING	1	KMEM
DC-47-7210		2" AKRON #8800 SERIES - S.S. BALL, VALVE CROSSLAY #2,	1	KMEM
DC-47-7610		PUSH/PULL 1/4 TURN CONTROL CROSSLAY #2	1	KMEM
DC-47-8210		INNOVATIVE CONTROLS LIQUID FILLED 2 1/2" PRESS GAUGE SS - CROSSLAY #2	1	KMEM
		CROSSLAY & SPEEDLAY OPTIONS - RM AERIAL	**1**	**KMEM**
DC-50-7015	>	VINYL CROSS LAY COVER	1	KMEM
DC-50-7030		CROSSLAY COVER RED IN COLOR	1	KMEM
	>	**WATERWAY DISCHARGE**	**1**	**KMEM**
DC-62-0215		AERIAL WATERWAY DISCHARGE - TA-MD AERIAL	1	KMEM

PART NO	S	DESCRIPTION	QTY	ID
DC-62-1130		WATERWAY DISCHARGE, PLUMBING, 4" STAINLESS STEEL - RM	1	KMEM
DC-62-1240		4" AKRON #8840 SERIES VALVE, WATERWAY	1	KMEM
DC-62-1950	>	AKRON HANDWHEEL GEAR VALVE CONTROL, WATERWAY	1	KMEM
DC-62-2210		INNOVATIVE CONTROLS LIQUID FILLED 2 1/2" PRESS GAUGE SS - WATERWAY	1	KMEM
		PUMP PANELS & ACCESSORIES	**1**	**KMEM**
DD-65-0505		SIDE MOUNT PUMP PANEL - RM AERIAL	1	KMEM
DD-65-4115		SIDE MOUNT PANELS - 12 GAUGE BRUSHED STAINLESS STEEL	1	KMEM
DD-65-4710		VERTICALLY HINGED GAUGE PANEL - SIDE MOUNT	1	KMEM
DD-65-4810		OFFICER SIDE VERTICALLY HINGED PUMP ACCESS DOOR - SIDE MOUNT	1	KMEM
DD-65-5150		PANEL FASTENERS	1	KMEM
DD-65-5510		CAPS AND ADAPTERS SAFETY TETHER - BALL CHAIN	1	KMEM
DD-65-8820		PUMP PANEL DISCH./SUCTION TRIM PLATES, HIGH POLISHED	1	KMEM
DD-65-9000		DISCHARGE GAUGE TRIM BEZELS	1	KMEM
DD-65-9110		IDENTIFICATION PLATES	1	KMEM
DD-66-0100		PUMP OPERATOR'S PANEL LIGHT SHIELD	1	KMEM
DD-66-0135		TECNIQ E18 LED LIGHTS - LIGHT SHIELD	1	KMEM
DD-66-2100		OS PUMP PANEL LIGHTING	1	KMEM
DD-66-2130		TECNIQ EON 3 LED LIGHTS - OS PUMP PANEL	1	KMEM
		PUMP OPERATOR'S PANEL - SIDE MOUNT, AERIAL	**1**	**KMEM**
DD-70-2150		AIR HORN CONTROL BUTTON ON PUMP PANEL	1	KMEM
DD-70-2290		3/4" PUMP BY-PASS COOLER ON PUMP PANEL	1	KMEM
DD-70-2335		FIRE RESEARCH "IN CONTROL" PRESSURE GOVERNOR CONTROL @ PANEL	1	KMEM
DD-70-2410		PUMP PRESSURE & VACUUM TEST PORTS @ PANEL	1	KMEM
DD-70-4125	>	DELETE - MASTER PRESSURE & COMPOUND GAUGES	1	KMEM
DD-70-4130		**** CONSIDER DELETING MASTER GAUGES - IN GOVERNOR DISPLAY ****	1	KMEM
DD-70-4680		PRESSURE & COMPOUND GAUGE RANGES - SINGLE STAGE	1	KMEM
DD-70-4900		AUXILIARY ENGINE COOLER	1	KMEM
DD-70-4930		GAUGE HEATERS, MC PRODUCTS ON ALL DISCHARGE GAUGES	1	KMEM
		WATER TANK LEVEL GAUGE - AERIAL	**1**	**KMEM**
DD-72-0410		FIRE RES - TANK VISION #WLA300-A00 LED WATER TANK GAUGE - PRIMARY	1	KMEM
DD-72-1300	>	FIRE RES WATER LEVEL - 1/4" NPT PRESS TRANS @ BOTTOM TANK	1	KMEM
DD-80-0110		SLIDE-OUT STEP @ DRIVER'S PUMP OPERATOR'S PANEL	1	KMEM
DE-00-1015	>	**** HEADER, 109' MD TA, WATER TANK	1	KMEM
		WATER TANKS/OPTIONS AERIALS	**1**	**KMEM**
DE-05-1700	>	UPF POLYIIE TANK, 300 GAL. - AERIAL	1	KMEM
DE-05-6000		TANK DESCRIPT, CONSTR AND MOUNT, UPF POLY IIE TANK	1	KMEM
JA-00-0100		BODY AND COMPARTMENT HEADER (ALL AERIAL DEVICES)	1	KMEM
JA-00-5020		GEN. 3/16" ALUM BODY DESCRIPT REAR MNT. LADDERS, HEAVY DUTY	1	KMEM
TF-02-4030		COMPARTMENTATION, 109 TA STYLE #1H-HI	1	KMEM
		****** HEADER, 103-RM BODY OPTIONS (WITH PUMP)**	**1**	**KMEM**
TF-10-0100		BEVELED OVERLAPPING DOORS, ALL COMPARTMENTS, ALL DEVICES	1	KMEM
TF-10-1900		BRUSHED FINISHED DOOR PANS - 2" THICK DOORS	1	KMEM
TF-10-2700		DOOR HINGE FOR BEVELED OVERLAPPING HINGED DOORS	1	KMEM
TF-10-2800		DOOR SEAL FOR BEVELED OVERLAPPING HINGED DOORS	1	KMEM
TF-10-2940		ROTARY LATCHES WITH D-RING HANDLES	1	KMEM
TF-10-3150		GAS SHOCK ON HORIZONTALLY & VERTICALLY HINGED DOORS	1	KMEM
TF-10-6000		COMPARTMENT FLOORS (AERIALS ONLY)	1	KMEM
TF-11-0500		COMPARTMENT GENERAL DESCRIPTION, ALL LADDERS & PLATFORMS	1	KMEM
TF-11-1441		PAINTED REAR BODY PANEL, RM	1	KMEM
TF-11-2315		109 PAINTED 1/2 WIDTH OUTRIGGER COVER PANEL	1	KMEM
TF-11-3045		BODY RUB RAILS, C-CHANNEL	1	KMEM
TF-12-1000		RUNNING BOARD STEPS (AERIALS ONLY)	1	KMEM
TF-13-3000		REAR BODY MODULE, REAR MOUNTS A-FRAME ONLY	1	KMEM
TF-13-3100		REAR MOUNT, TURNTABLE A-FRAME LADDER STEPS (MD)	1	KMEM
TF-13-5000		REAR-MOUNTS, BODY HANDRAILS, EXTRUDED ALUMINUM, A-FRAME BODY	1	KMEM
TF-14-1000		ALUMINUM WHEEL WELL LINERS	1	KMEM
TF-14-1710		POLISHED ALUMINUM FENDERETTES, TANDEM AXLE BODIES	1	KMEM

PART NO	S	DESCRIPTION	QTY	ID
TF-14-5000		REAR MUD FLAPS	1	KMEM
TF-14-6700		PAINTED REAR TOW EYES, BELOW BODY - REARMOUNT AERIALS	1	KMEM
TF-15-1020		HOSE BED, REAR MOUNT AERIALS, 75-100 HIGH BODY	1	KMEM
TF-15-1900		ALUMINUM HOSE BED FLOORING - AERIAL	1	KMEM
TF-15-2020	>	HOSE CHUTE, RIGHT CENTER	1	KMEM
TF-15-3110		HOSE BED COVER, VINYL WITH QTR TURNS	1	KMEM
TF-15-3190		HYPALON MATERIAL RED IN COLOR	1	KMEM
		****** HEADER, COMPARTMENT ACCESSORIES - REARMOUNTS**	**1**	**KMEM**
TJ-05-1000		ADJUSTABLE SHELF DESCRIPTION - REARMOUNT	1	KMEM
TJ-05-2000	>	(AUTO QTY) ADJUSTABLE SHELF(S), MOUNTED AS DIRECTED	8	KMEM
TJ-10-1000		250#, FLOOR MOUNTED, ROLLOUT TRAY DESCRIPTION - REARMOUNT	1	KMEM
TJ-10-1105	>	(AUTO QTY) ROLLOUT TRAY(S), MOUNTED AS DIRECTED	4	KMEM
TJ-55-1000		SWING OUT TOOL BOARD, PAC TRAC DOUBLE FACED EXTRUSION - REARMOUNT	1	KMEM
TJ-55-1200	>	(AUTO QTY) SWING OUT TOOL BOARD(S), MOUNTED AS DIRECTED	1	KMEM
		****** HEADER, HD RM WITH PUMP 120/240 VOLT AC ELEC & GEN**	**1**	**KMEM**
TL-03-0000		120/240 VOLT ELECTRICAL SYSTEM TESTING	1	KMEM
TL-09-0015		**** PICK GENERATOR LOCATION - HD-RM WITH PUMP ****	1	KMEM
TL-15-1000		120 & 240 VOLT WIRING METHODS	1	KMEM
	>	**"NOTE" READ THIS BEFORE ADDING ANY ADDITIONAL GROUND LADDERS**	**1**	**KMEM**
		****** HEADER, 79-100-109-TA-HI GROUND LADDERS**	**1**	**KMEM**
TN-00-5020	>	CENTER LADDER STORAGE, 79-100-109 TA REAR MOUNT	1	KMEM
TN-00-7020		ROLL-UP DOOR - BRUSHED, LADDER COMPARTMENT, REAR MOUNT ONLY	1	KMEM
TN-01-0120		ALCO-LITE 115' LADDER COMP, 79-100-109 TA REAR MOUNT	1	KMEM
TN-02-1110		ALCO-LITE PEL3-35 35' 3-SECTION EXTENSION LADDER (ALUM)	1	KMEM
TN-02-1170		ALCO-LITE PEL-24 24' 2-SECTION EXTENSION LADDER (ALUM)	1	KMEM
TN-02-2510		ALCO-LITE PRL-16 16' ROOF LADDER W/FOLDING HOOKS (ALUM)	2	KMEM
TN-02-7000		ALCO-LITE AEL-14 14' ATTIC EXTENSION LADDER (ALUM)	1	KMEM
TN-02-8010		ALCO-LITE FL-10 10' FOLDING ATTIC LADDER (ALUM)	1	KMEM
		****** HEADER, PIKE POLES & HOLDERS - AERIALS**	**1**	**KMEM**
TN-20-0000		ADDITIONAL ITEMS SHIPPED WITH VEHICLE, ALL AERIAL DEVICES	1	KMEM
		****** HEADER, LOOSE EQUIPMENT - AERIAL**	**1**	**KMEM**
TN-35-1015		TWO (2) ZICO #SAC-44 FOLDING WHEEL CHOCKS, (2) MTD DRIVER SIDE	1	KMEM
		****** HEADER, 109' H.D. 4-SECTION AERIAL LADDER, TANDEM AXLE**	**1**	**KMEM**
TQ-00-0650		109' M.D. AERIAL LADDER, GEN., INTENT & DESIGN STANDARDS	1	KMEM
TQ-00-3000		MOUNTING OF AERIAL, REAR MOUNTS	1	KMEM
TQ-00-3230		HEIGHT AND REACH, 109' 4-SECT. MD AERIAL LADDER	1	KMEM
TQ-00-4000		MATERIAL STANDARDS, ALL DEVICES	1	KMEM
TQ-00-5010		109' H.D. AERIAL LADDER, HYDRAULIC SYSTEM	1	KMEM
TQ-00-5115		PARKER HOSE KIT - 4 JACK UNIT (109)	1	KMEM
TQ-00-6120		HYDRAULIC PUMP - PRESSURE COMPENSATED	1	KMEM
TQ-00-7010		HYDRAULIC RESERVOIR - 40 GALLON	1	KMEM
TQ-00-7065		HYDRAULIC OIL - REGULAR - A/W 46 - 60 GAL	1	KMEM
TQ-00-7110		DIVERTER VALVE, REAR MOUNT DEVICES	1	KMEM
TQ-00-7225		OUTRIGGER HYDRAULIC CONTROL VALVE - RM DO3	1	KMEM
TQ-00-7410		ELECTRIC TURNTABLE HYDRAULIC CONTROL VALVE, RM LADDERS	1	KMEM
TQ-00-7505		HYDRAULIC SYSTEM FILTRATION	1	KMEM
TQ-00-8515		RM LADDER 4-OUTRIGGER, "IQAN" MOTION CONTROL SYSTEM - ELECTRIC CONTROLS @ TT	1	KMEM
TQ-00-8700		HYDRAULIC PUMP PRESSURE - DISPLAY	1	KMEM
TQ-00-8710		ELEVATION ANGLE OF LADDER - DISPLAY	1	KMEM
TQ-00-8715		VERTICAL HEIGHT OF LADDER - DISPLAY	1	KMEM
TQ-00-8725		DEGREE OF ROTATION FROM VEHICLE CENTERLINE - DISPLAY	1	KMEM
TQ-00-8730		E-ZONE CAB & BODY AVOIDANCE WARNING - DISPLAY	1	KMEM
TQ-00-8735		E-ZONE SHORT JACK WARNING - DISPLAY	1	KMEM
TQ-00-8740		CRADLE ALIGNMENT MESSAGE - DISPLAY	1	KMEM
TQ-00-8750		DEVICE LOAD MONITORING - DISPLAY	1	KMEM
TQ-00-8760		E-SPEED LADDER TIP SPEED CONTROL - DISPLAY	1	KMEM
TQ-00-8765		E-CUSH RAMP CONTROL FOR ELEVATION - DISPLAY	1	KMEM
TQ-00-8770		E-CUSH RAMP CONTROL FOR EXTENSION & RETRACTION - DISPLAY	1	KMEM

PART NO	S	DESCRIPTION	QTY	ID
TQ-00-8890		WARNING MESSAGES - TURNTABLE ONLY	1	KMEM
TQ-00-9510		109' H.D. AERIAL LADDER, EMERGENCY HYDRAULIC PUMP, EPU	1	KMEM
TQ-01-1000		HOT SHIFT PTO W/CONTROLS IN CAB	1	KMEM
TQ-01-1100		FAST IDLE CONTROL FOR ALL AERIAL DEVICES	1	KMEM
TQ-02-0030		109' H.D. AERIAL LADDER, TORQUE BOX	1	KMEM
TQ-02-1030		109' H.D. AERIAL OUTRIGGERS - 14'	1	KMEM
TQ-02-1630		109' H.D. LADDER OUTRIGGERS - HORIZONTAL CYLINDER	1	KMEM
TQ-02-1860		109' HD LADDER OUTRIGGERS - VERTICAL CYLINDERS - EXTENDED STROKE	1	KMEM
TQ-02-2010		EXTENDED OUTRIGGER PENETRATION - 11 DEGREES	1	KMEM
TQ-02-2110		IQAN - OUTRIGGER STRING POTENTIOMETER - FOUR (4) OUTRIGGERS	1	KMEM
TQ-02-2200		OUTRIGGER/JACK FOOT PADS, FOUR (4) JACK DEVICES	1	KMEM
TQ-02-2350		AUXILARY JACK PADS, FOUR (4) 24" X 24" x 1" POLY	1	KMEM
TQ-02-2500		OUTRIGGER INTERLOCK SYSTEM & ALARM, ALL DEVICES	1	KMEM
		****** HEADER - OUTRIGGER LIGHTING, FOUR (4) OUTRIGGERS**	**1**	**KMEM**
TQ-02-5145		AKRON LED OUTRIGGER LAMPS, 4-OUTRIGGERS	1	KMEM
TQ-02-5225		LED OUTRIGGER GROUND LIGHTS - GROTE WHITELIGHT, 4-OUTRIGGERS	1	KMEM
TQ-02-5360		CODE 3 45 SERIES, LED LIGHTS ON (4) OUTRIGGER PANELS	1	KMEM
TQ-02-6005		OUTRIGGER WARNING LIGHT ACTIVATION, PRIMARY WARNING	1	KMEM
TQ-02-6830		OUTRIGGER SCOTCHLITE - DIAMOND GRADE, RED/YELLOW CHEVRON	1	KMEM
TQ-02-7130		AERIAL LADDER, TETHER OUTRIGGER CONTROLS - FOUR JACKS	1	KMEM
TQ-02-8100		AUTO-LEVEL CONTROLS ON TETHER OUTRIGGER CONTROL	1	KMEM
TQ-02-9100		"AUTO-LEVEL" 109' MEDIUM DUTY REAR MOUNTS	1	KMEM
TQ-02-9200		OUTRIGGER LEVEL SIDE TO SIDE, ALL REAR MOUNT DEVICES	1	KMEM
TQ-03-0200		109' H.D. AERIAL LADDER, TURNTABLE	1	KMEM
TQ-03-3010		TURNTABLE DECK - ALUMINUM TREADPLATE	1	KMEM
TQ-04-1852		HEEL PIN STEP ON TURNTABLE, 79', 103', 109' & 123' & 100' M.M. LADDERS	1	KMEM
TQ-04-1855		TURNTABLE HANDRAILS, KNURLED ALUMINUM, 3-SIDES	1	KMEM
TQ-04-2117		HEEL PINS - 109'	1	KMEM
TQ-04-2300		STAINLESS STEEL CRADLE ALIGNMENT ARROWS ON TURNTABLE	1	KMEM
TQ-04-2820		FIRE RESEARCH "MAN SAVER" BARS @ TURNTABLE OPENINGS	1	KMEM
TQ-04-5150		109' H.D. AERIAL LADDER, TURNTABLE SWIVEL	1	KMEM
TQ-04-9000		IQAN - SWIVEL ROTATION ENCODER	1	KMEM
TQ-06-0130		109' H.D. LADDER, LADDER CONSTRUCTION	1	KMEM
TQ-06-0900		STAINLESS STEEL EGRESS W/TIP SKID GAURDS	1	KMEM
TQ-06-1075		109' H.D. 4-SECTION, LADDER DIMENSIONS	1	KMEM
TQ-06-3000		RUNG COVERS - PHOTOLUMINESCENT, ALL DEVICES	1	KMEM
TQ-06-4005		SINGLE PAIR FOLDING STEPS @ LADDER TIP	1	KMEM
TQ-06-4100		RED SCOTCHLITE MATERIAL ON LAST 6' OF LADDER TIP	1	KMEM
TQ-06-4200		4' FIRE HOOKS UNLIMITED PIKE POLE MOUNTED IN FLY SECTION OF LADDER	1	KMEM
TQ-06-4240	>	PIKE POLE MOUNTED ON LEFT SIDE OF FLY SECTION	1	KMEM
TQ-06-4250		6 LB. PICKHEAD AXE MOUNTED IN FLY SECTION, INCLUDES AXE	1	KMEM
TQ-06-4260	>	AXE MOUNTED ON LEFT SIDE OF FLY SECTION	1	KMEM
TQ-06-6500		RESCUE EYELET ON LAST RUNG OF LADDER TIP	1	KMEM
TQ-06-9000		AERIAL TRAVEL SUPPORT, ALL DEVICES	1	KMEM
TQ-06-9035		CRADLE ILLUMINATION LIGHTS - GROTE WHITELIGHT LED	1	KMEM
TQ-07-0250		109' H.D. AERIAL LADDER, ELEVATION SYSTEM	1	KMEM
TQ-07-2800		IQAN - INCLINOMETER	1	KMEM
TQ-07-2801		IQAN - MOMENT LOAD INDICATOR	1	KMEM
TQ-07-2805		IQAN - E-CUSH CONTROL, ELEVATION SYSTEM - LADDER	1	KMEM
TQ-08-0250		109' H.D. AERIAL LADDER, ROTATION SYSTEM	1	KMEM
TQ-08-2800		ROTATION MOTOR AND BRAKE - 41" EXTERNAL BEARINGS	1	KMEM
TQ-08-2950		SWING DRIVE ADJUSTMENT	1	KMEM
TQ-08-3000		IQAN - "E-SPEED" SAFETY SYSTEM, LADDERS	1	KMEM
TQ-08-3110		IQAN - "E-ZONE" ROTATION SAFETY SYSTEM, 4-OUTRIGGERS	1	KMEM
TQ-08-3650		IQAN - "E-ZONE" CAB & BODY PROXIMITY SYSTEM - LADDERS	1	KMEM
TQ-09-0250		109' H.D. AERIAL LADDER, EXTENSION/RETRACTION SYSTEM	1	KMEM
TQ-09-2350		EXTENSION CYLINDERS PAINTED LADDER PAINT COLOR	1	KMEM
TQ-09-2800		IQAN - EXTENSION SYSTEM STRING POTENTIOMETER	1	KMEM

PART NO	S	DESCRIPTION	QTY	ID
TQ-09-2810		IQAN - "E-CUSH" EXTENSION/RETRACTION SYSTEM - LADDERS	1	KMEM
TQ-09-3030		LADDER SLIDE PADS, 109' LADDER	1	KMEM
		LADDER EXTENSION NUMBERS, ALL DEVICES	**1**	**KMEM**
TQ-09-3150		LADDER LEVEL INDICATOR (BASE SECTION) - LIGHTED	1	KMEM
TQ-09-3217		LADDER, CABLE/HOSE/WIRE ROUTING, 109' LADDER	1	KMEM
		****** HEADER - LADDER, 120 VOLT ELECTRICAL SYSTEM & ACCESSORIES**	**1**	**KMEM**
TQ-10-0100		LADDER, 120 VOLT ELECTRICAL SYSTEM	1	KMEM
TQ-10-0125		DELETE LADDER TIP RECEPTACLE	1	KMEM
		****** HEADER - LADDER, 12 VOLT ELECTRICAL SYSTEM & ACCESSORIES**	**1**	**KMEM**
TQ-10-1018		HEEL PIN STEP LIGHTS - TECNIQ EON 3 LED LIGHTS	1	KMEM
TQ-10-1040		TURNTABLE CONTROL CONSOLE LIGHTING - LUMA BAR LED H2O	1	KMEM
TQ-10-1060		TURNTABLE CONSOLE STEP LIGHT - TECNIQ EON 3 LED	1	KMEM
TQ-10-1110		TWO (2) UNITY SPOTS @ LADDER BASE SECTION	1	KMEM
TQ-10-1210		ONE (1) UNITY SPOT & ONE (1) FLOOD @ LADDER TIP	1	KMEM
TQ-12-0010		LADDER, CONTROL STATION	1	KMEM
TQ-12-0020		RM LADDERS, CONSOLE LOCATED @ LH SIDE OF TURNTABLE, STD	1	KMEM
TQ-12-0085		PAINTED ALUMINUM TURNTABLE CONSOLE - MATCH LADDER COLOR	1	KMEM
TQ-12-0250		109' H.D. AERIAL LADDER, TURNTABLE CONTROL STATION	1	KMEM
TQ-12-2520		FIRE RESEARCH INSIGHT FLOWMETER @ TURNTABLE CONSOLE	1	KMEM
TQ-12-2595		TURNTABLE CONSOLE COVER - PAINTED RADIUS	1	KMEM
TQ-14-1200		LADDER, FIRE RESEARCH ACT -2 WAY COMMUNICATION SYSTEM - LOWER CONTROL	1	KMEM
TQ-14-1205		LADDER, FIRE RESEARCH ACT 2-WAY COMMUNICATION SYSTEM - UPPER SPEAKER/MIC	1	KMEM
TQ-18-0100		109' H.D. AERIAL LADDER, LADDER WATERWAY SYSTEM	1	KMEM
TQ-18-1030		109' H.D. AERIAL LADDER, LADDER WATERWAY	1	KMEM
TQ-18-2525		4" HEEL PIN SWIVEL - 109' LADDER	1	KMEM
TQ-18-2600		AUTOMATIC WATER DRAIN/VENT	1	KMEM
TQ-18-3000		ALL DEVICES, WATERWAY RELIEF VALVE	1	KMEM
TQ-18-3015		REAR MOUNT AERIAL WATERWAY DRAIN, 1 1/2" VALVE	1	KMEM
TQ-18-3150		4" NST REAR AERIAL WATERWAY INLET ADAPTER, REAR MOUNTS	1	KMEM
TQ-18-3800		INNOVATIVE CONTROLS 2 1/2" GAUGE FOR AERIAL INLET, REAR MOUNTS	1	KMEM
TQ-18-4130	>	LADDER, AKRON #3480 "STREAMMASTER II" MONITOR	1	KMEM
TQ-18-4210	>	LADDER, AKRON #5178 NOZZLE	1	KMEM
TQ-18-4300		LADDER, AKRON MONITOR CONTROLS W/ AUTO STOW	1	KMEM
TQ-18-4505		LADDER, ELECTRIC SELECTABLE WATERWAY TROLLEY - NEW	1	KMEM
TQ-18-4950		"STORE FRONT BLITZ" DESCRIPTION	1	KMEM
TQ-20-0250		109' H.D. AERIAL LADDER, LADDER CAPACITIES, TANDEM AXLE	1	KMEM
TQ-50-0100		FIRE DEPT AERIAL FAMILIARIZATION - PROVIDED BY FACTORY	1	KMEM
TQ-50-0140		FACTORY FAMILIARIZATION - FOUR (4) DAYS	1	KMEM
TQ-50-0600		AERIAL SERVICE, ALL DEVICES	1	KMEM
TQ-50-0700		WARNING DECALS, ALL DEVICES	1	KMEM
TQ-52-0100		AERIAL LADDER, MANUALS, TWO (2) SETS	1	KMEM
TQ-70-0250		109' H.D. AERIAL LADDER, TANDEM AXLE , CERT & TESTING	1	KMEM
		****** HEADER - PAINT SECTION - ALL UNITS ******	**1**	**KMEM**
UA-00-1100		GENERAL PAINT DESCRIPTION - ALL	1	KMEM
UA-00-1200		GENERAL PRIMER & PREP DESCRIPTION - LADDER/PLATFORM	1	KMEM
UA-00-1400		GENERAL FINISH PAINT DESCRIPTION - LADDER/PLATFORM	1	KMEM
UA-00-2700		BODY BUFFING & FINISH - LADDER/PLATFORM	1	KMEM
		****** HEADER - LADDER/PLATFORM BODY PAINT ******	**1**	**KMEM**
UA-03-0200		INSIDE/UNDERSIDE BODY PAINTED JOB COLOR - LADDER/PLATFORM	1	KMEM
UA-03-0400		CMPT INT W/ MULTISPEC, WHITE MARBLE STONE - LADDER/PLATFORM	1	KMEM
UA-03-0900		SINGLE COLOR BODY PAINT SCHEME - LADDER/PLATFORM	1	KMEM
UA-03-2200		PUMPHOUSE & PLUMBING PAINTED JOB COLOR - LADDER/PLATFORM	1	KMEM
		****** HEADER - TANDEM AXLE CUSTOM CHASSIS PAINT (AERIAL)**	**1**	**KMEM**
UA-05-0050		CUSTOM CAB PRIMER & PREP	1	KMEM
UA-05-0070		CUSTOM FINISH PAINT & PREP	1	KMEM
UA-05-0200		TWO TONE CUSTOM CAB PAINT SCHEME	1	KMEM
UA-05-0350		CUSTOM CAB BUFFING & FINISH	1	KMEM
UA-05-0360		CUSTOM CAB INTERIOR PAINT - TEXTURED GRAY	1	KMEM

PART NO	S	DESCRIPTION	QTY	ID
UA-05-0405		CUSTOM CHASSIS JOB COLOR FRAME RAILS	1	KMEM
UA-05-0505		CUSTOM CHASSIS WHEEL AND HUB PAINT - TANDEM AXLE	1	KMEM
UA-06-0200		LADDER, PAINTING, ALL DEVICES, WHITE #91528	1	KMEM
UA-06-0450		EXTENSION CYLINDERS PAINTED TO MATCH LADDER COLOR	1	KMEM
UA-06-0900		TORQUEBOX PAINT - JOB COLOR	1	KMEM
UA-06-1100		OUTRIGER PAINT - SILVER URETHABOND 104	1	KMEM
UA-06-1205		TURNTABLE PAINT - LADDER COLOR	1	KMEM
UA-06-1215		TURNTABLE CONSOLE PAINT - LADDER COLOR	1	KMEM
UA-06-1225		LIFT CYLINDERS CONSOLE PAINT - LADDER COLOR	1	KMEM
UA-06-1500		LADDER RUST INHIBITOR - ALL DEVICES	1	KMEM
UA-06-2120	>	PAINT CODES, TWO-TONE COLORS, FILL IN BLANKS	1	KMEM
UA-06-2130		PAINT CODES, AERIAL DEVICE - WHITE #91528	1	KMEM
UA-06-2200		PINT OF TOUCH-UP PAINT	1	KMEM
UA-06-2510		FINALIZATION & DETAILING - LADDER/PLATFORM	1	KMEM
UA-06-2850		RUSTPROOFING WARRANTY, TEN (10) YEAR	1	KMEM
		****** HEADER, LETTERING & STRIPING - 109-4-RM-MD**	**1**	**KMEM**
UA-12-0100		COMPUTER GENERATED LETTERING	1	KMEM
UA-12-1220		GOLDLEAF W/ DUAL DROP SHADOW LETTERING ON FRONT CAB DOORS	1	KMEM
UA-12-1245		3" LETTERING ON FRONT CAB DOORS	1	KMEM
UA-12-1760		GOLDLEAF W/ DUAL DROP SHADOW LETTERING ON CREW CAB DOORS	1	KMEM
UA-12-1785		3" LETTERING ON CREW CAB DOORS	1	KMEM
UA-12-2720		GOLDLEAF W/ DUAL DROP SHADOW LETTERING ON FRONT OF CAB	1	KMEM
UA-12-2745		3" LETTERING ON FRONT OF CAB	1	KMEM
UA-12-3120		GOLDLEAF W/ DUAL DROP SHADOW LETTERING ON CAB SIDE PANEL	1	KMEM
UA-12-3145		3" LETTERING ON CAB SIDE PANEL	1	KMEM
UA-12-3680		SCOTCH-LITE W/ DUAL DROP SHADOW LETTERING ON REAR BODY PANEL	1	KMEM
UA-12-3745		3" LETTERING ON REAR BODY	1	KMEM
UA-13-0100		LETTERING FONT - BASIC BLOCK TYPE FONT	1	KMEM
UA-14-1310		LARGE CUSTOM FIRE DEPARTMENT LOGO	1	KMEM
UA-14-1320		SCOTCH-LITE W/ TWO COLORS - LARGE LOGO	1	KMEM
UA-14-1335	>	LOCATION - LARGE CUSTOM LOGO	1	KMEM
UA-16-1000		ACCENT STRIPING & SCROLL OPTIONS	1	KMEM
UA-16-1200		1/2" ACCENT STRIPE ON BODY UPPER & LOWER AREAS OF BODY	1	KMEM
UA-16-1210		GOLD LEAF ACCENT MATERIAL - UPPER & LOWER AREAS OF BODY	1	KMEM
UA-16-1500		1/2" ACCENT STRIPE ON CAB PAINT BREAK LINE	1	KMEM
UA-16-1510		GOLD LEAF ACCENT MATERIAL - CAB PAINT BREAK LINE	1	KMEM
UA-20-0100		19" X 144" LETTERING PANELS ON BASE SECTION	1	KMEM
UA-20-0200		SIGN PANELS TO PAINTED TO MATCH AERIAL DEVICE COLOR	1	KMEM
UA-20-0500		SCOTCH-CAL W/O DROP SHADOW LETTERING FOR AERIAL	1	KMEM
UA-50-0200		NFPA REQUIRED SCOTCH-LITE STRIPINGSTRIPING - TA AERIAL	1	KMEM
UA-50-0220		8" SCOTCH-LITE STRIPE ON CAB AND BODY - TA AERIAL	1	KMEM
UA-58-5100		WHITE SCOTCH-LITE	1	KMEM
UA-80-6000		REAR CHEVRON STRIPING	1	KMEM
UA-80-6002		50% VERTICAL SURFACE	1	KMEM
UA-80-6030		6" REAR SCOTCH-LITE CHEVRON STRIPING	1	KMEM
UA-80-6070		RUBY RED & LEMON YELLOW SCOTCH-LITE	1	KMEM
		****** PROPOSED - AERIAL WARRANTY PKG, W/PUMP @ REAR OF SPEC**	**1**	**KMEM**
W6-00-000J		PROPOSED - KME WARRANTY, STARTING ON DELIVERY DATE	1	KMEM
W6-00-0010	**X** <	PROPOSED - 5 YEAR FCAM WARRANTY - CUSTOM CHASSIS	1	
		$17,500 per email Phil to Byron 9-27-16		
W6-00-003M	>	PROPOSED - 5 YEAR WARRANTY - BASE WITH CUSTOM CHASSIS	1	KMEM
W6-00-0150		PROPOSED - 5 YEAR CUMMINS BASE WARRANTY	1	KMEM
W6-00-0210		PROPOSED - 5 YEAR ALLISON EVS TRANSMISSION WARRANTY	1	KMEM
W6-00-0220		PROPOSED - 3 YEAR COOLING SYSTEM WARRANTY - CUSTOM	1	KMEM
W6-00-0230		PROPOSED - LIFETIME FRAMERAIL WARRANTY	1	KMEM
W6-00-0242		PROPOSED - SHEPPARD STEERING GEAR STANDARD - THREE YEAR WARRANTY	1	KMEM
W6-00-0254		PROPOSED - 5 YEAR MERITOR FRONT AXLE - WARRANTY	1	KMEM
W6-00-0266		PROPOSED - 5 YEAR MERITOR 180 SERIES TANDEM AXLE REAR - WARRANTY	1	KMEM

PART NO	S		DESCRIPTION	QTY	ID
W6-00-0270			PROPOSED - 3 YEAR MERITOR ABS - WARRANTY	1	KMEM
W6-00-0320		>	PROPOSED - 10 YEAR CAB STRUCTURAL WARRANTY	1	KMEM
W6-00-0330			PROPOSED - 10 YEAR BODY STRUCTURAL WARRANTY	1	KMEM
W6-00-0390			PROPOSED - 10 YEAR CAB & BODY CORROSION WARRANTY	1	KMEM
W6-00-0410			PROPOSED - 10 YEAR BODY CORROSION WARRANTY, USE W/COMM CHASS	1	KMEM
W6-00-0450			PROPOSED - PAINT FINISH WARRANTY, TEN (10) YEAR	1	KMEM
W6-00-0470			PROPOSED - 5 YEAR LETTERING WARRANTY	1	KMEM
W6-00-0483			PROPOSED - 1 YEAR BRIGHTWORK WARRANTY	1	KMEM
W6-00-0490			PROPOSED - 10 YEAR STAINLESS STEEL PIPING WARRANTY	1	KMEM
W6-00-0535	**S**		PROPOSED - REAR SUSPENSION - HENDRICKSON AIR RIDE - TANDEM AXLE -THREE YEAR WA	1	KMEM
W6-00-0570			PROPOSED - SAFEGUARD TECHNOLOGY - 10 YEAR - RUNG COVERS	1	KMEM
W6-00-0590			PROPOSED - 20 YEAR AERIAL LADDER WARRANTY	1	KMEM
W6-00-0630		>	PROPOSED - FIVE (5) YEAR AERIAL WATERWAY SWIVEL WARRANTY - AMITY	1	KMEM
W6-00-0650		>	PROPOSED - TEN 10 YEAR AERIAL WATERWAY WARRANTY - AMITY	1	KMEM
W6-00-0670			PROPOSED - AERIAL DEVICE REPAIR POLICY AND LIABILITY DISCLAIMER	1	KMEM
W6-00-0695			PRO - AERIAL DEVICE HYDRAULIC COMPONENT WARRANTIES	1	KMEM
W6-00-0710			PROPOSED - LIFETIME POLY TANK WARRANTY - ALL TANKS	1	KMEM
W6-00-0820			PROPOSED - WATEROUS 5 YEAR PUMP WARRANTY (PARTS & LABOR)	1	KMEM
W6-00-0823	**X**		WATEROUS FCAM 5YR WARRANTY CORRECTION	1	
W6-00-1153	**S**		DEALER PROVIDES WARRANTY TRANSPORT PROP and REQ	1	DLR
W6-00-1330			PROPOSED - AKRON - 5 YEAR LIMITED WARRANTY	1	KMEM
W6-00-1340			PROPOSED - AKRON HEAVY DUTY VALVE - 10 YEAR WARRANTY	1	KMEM
W6-00-1530			PROPOSED - USSC SEATING 6 YEAR WARRANTY	1	KMEM
WA-00-0010			"AERIAL FIRE APPARATUS" NFPA 2016 STATEMENT OF EXCEPTIONS	1	KMEM

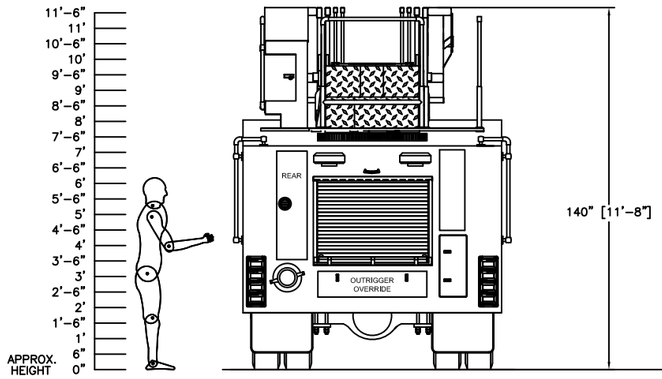

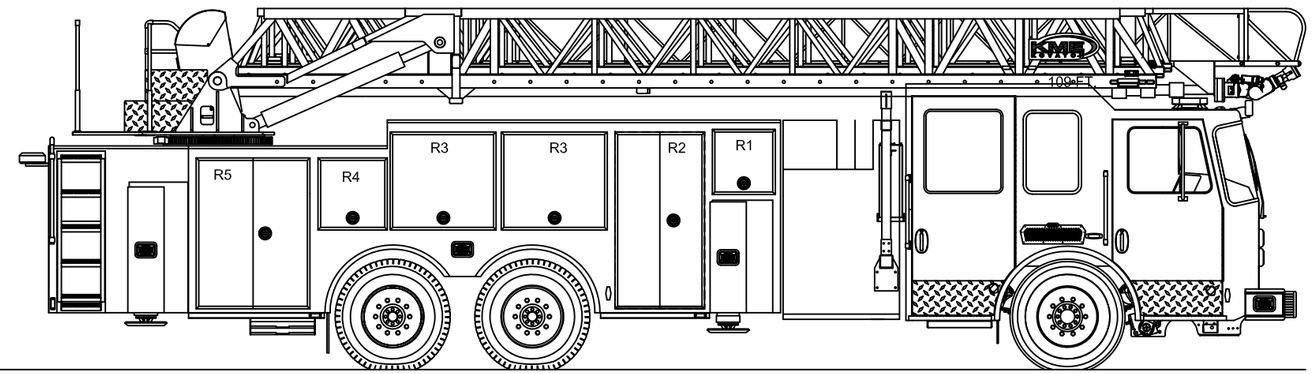

OFFICERS SIDE VIEW

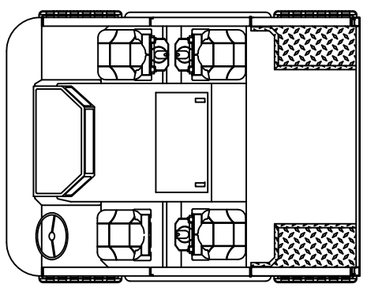

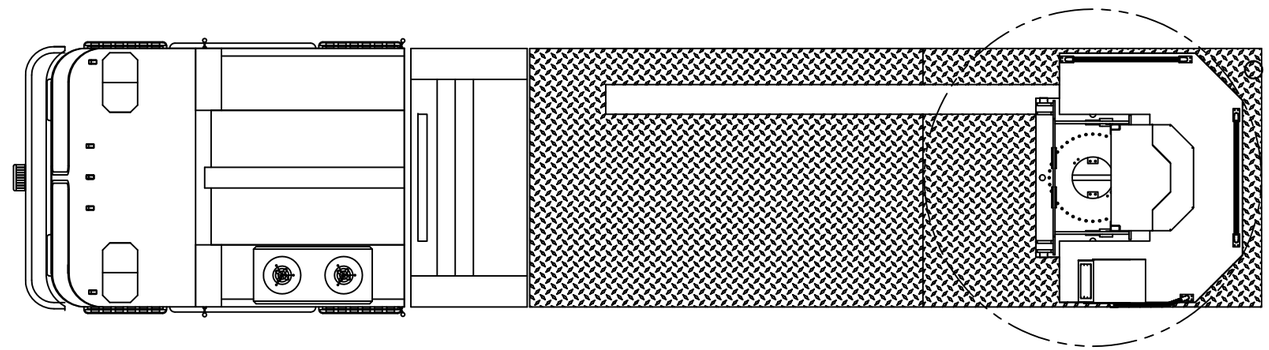

TOP VIEW

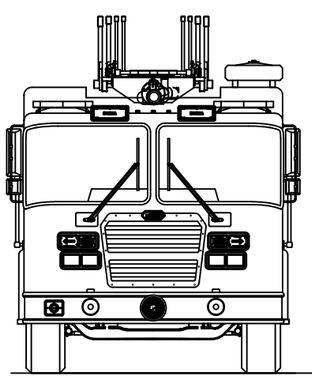

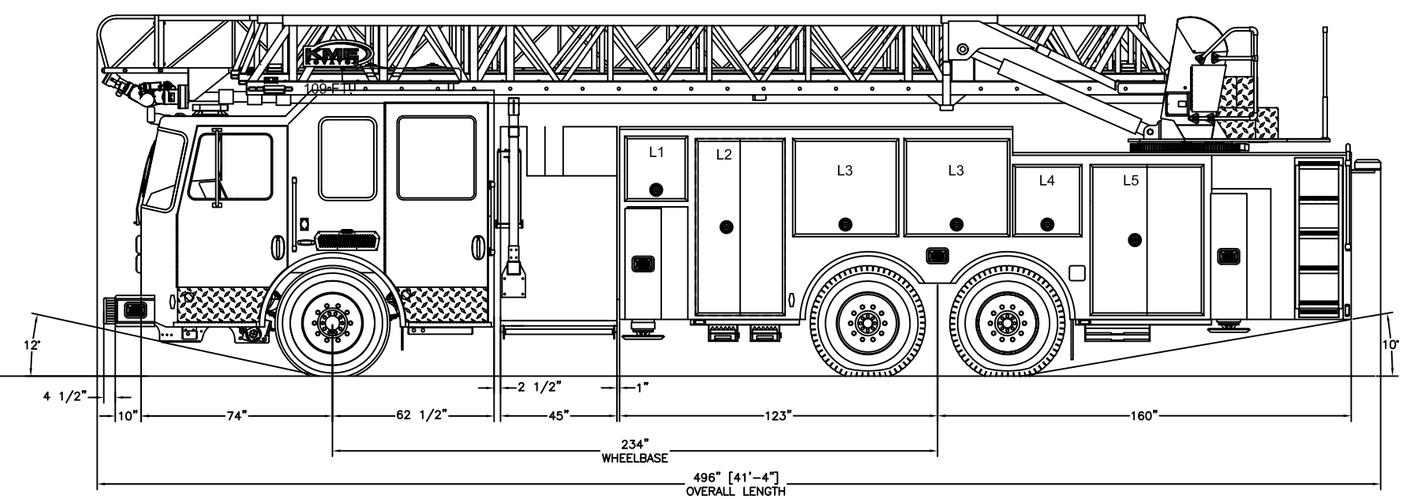

DRIVERS SIDE VIEW

CAB: 100"W PREDATOR MFD 10" RAISED ROOF
ENGINE & TRANS. CUMMINS ISX15 500 HP/ 4000 EVS
AXLES: 23,000# FRONT/54,000# REAR
PUMP: WATEROUS CSU-C20 2000 GPM SINGLE STAGE
WATER TANK: 300 GALLONS

THIS DRAWING IS A GENERAL CONFIGURATION AND MAY NOT NECESSARILY REFLECT ALL CONTRACTUAL REQUIREMENTS. CONTRACT SPECIFICATIONS SHALL PREVAIL OVER DRAWING.

CUSTOMER APPROVAL:

NAME:

TITLE:

DATE:

SYM	DATE	REVISION DESCRIPTION	APP'D

SALES ENGINEER : TBD

DIMENSIONS ARE APPROXIMATE & MAY VARY DUE TO BUILD ADJUSTMENTS

SCALE	DWG SIZE	DRAWN BY	Z.ZSCHUNKE	DATE
NONE	B	APPROVED BY	P.HOHERCHAK	9-29-16

109' REAR MOUNT LADDER

MAPC 8 HIGH END

PROPOSAL DRAWING

KME
ONE INDUSTRIAL COMPLEX - NESQUEHONING, PA 18240

KME

HIGH END FCAM 100 FOOT

MIDMOUNT AERIAL LADDER

“QUINT”

MAPC 9

Quote SO

MAPC/FCAM	MAPC 9 HIGH END 100' MID MOUNT AERIAL QUINT

Sales Rep:

Terms:

Drawing #:
Est. Delivery Date: / /
Customer PO #:
Customer #:
QPF #:

Penalty:

Quote No: 10170-0011
10/04/2016

PART NO	S	DESCRIPTION	QTY	ID
		== MID MOUNT LADDER - 713.016 07/13/16 ==	**1**	**KMEM**
		== LETTERING & STRIPING, 79' SA - 713.016 07/13/16 ==	**1**	**KMEM**
		== COMPARTMENT ACCESSORIES MIDMOUNT AERIAL - 713.016 07/13/16 ==	**1**	**KMEM**
		== MM WITH PUMP GEN/ELEC AC - 713.016 07/13/16 ==	**1**	**KMEM**
		== MISC AND LOOSE EQUIPMENT (AERIAL) - 713.016 07/13/16 ==	**1**	**KMEM**
		== AERIAL WARRANTY PACKAGE W/PUMP - 713.016 07/13/16 ==	**1**	**KMEM**
		DEALER ======= DEALER ======= DEALER	**1**	**DLR**
		QUOTE DATA VERSION: 0713.016 - 2016 DATA SET	**1**	**KMEM**
		INDEX OF PART NUMBERS	**1**	**KMEM**
		****** HEADER - CONTRACTS, PROPOSAL FORM, ETC @ FRONT OF SPECS**	**1**	**KMEM**
		****** PROPOSED - AERIAL SPEC BOILERPLATE**	**1**	**KMEM**
04-00-0000		PROPOSED - GENERAL INFORMATION - NFPA 1901	1	KMEM
04-00-0033		PROPOSED - COMPLETION INFO	1	KMEM
04-00-0040		PROPOSED - FMVSS CERTIFICATION	1	KMEM
04-00-0060		PROPOSED - RECORDS	1	KMEM
04-00-0075		PROPOSED - TOP OF THE LINE CHASSIS MULTIPLEX	1	KMEM
04-00-0107		PROPOSED - GENERAL CONSTRUCTION - AERIAL	1	KMEM
04-00-0120		PROPOSED - SINGLE LINE RESPONSIBILITY	1	KMEM
04-00-0130		PROPOSED - PRODUCT LIABILITY - $30,000,000.00	1	KMEM
04-00-0170		PROPOSED - CRITERIA & CODE CONFORMANCE - AERIAL	1	KMEM
04-00-0193		PROPOSED - PAINT PERFORMANCE CERTIFICATION	1	KMEM
04-00-0490		PROPOSED - PRICES & PAYMENTS	1	KMEM
04-00-0540		PROPOSED - BOND REQUIREMENTS	1	KMEM
04-00-0560		PROPOSED - PERFORMANCE BOND	1	KMEM
04-00-0580		PROPOSED - NON-COLLUSION AGREEMENT	1	KMEM
04-00-0630		PROPOSED - MATERIAL & WORKMANSHIP	1	KMEM
04-00-0660		PROPOSED - CONTRACT SPECIALIST	1	KMEM
04-00-0680		PROPOSED - APPROVAL DRAWING	1	KMEM
04-00-1200		PROPOSED - DELIVERY	1	KMEM
04-00-1215		PROPOSED - INSTRUCTION MANUALS, TWO (2) SETS - CD	1	KMEM
04-00-1215	**X**	POWERPOINT DELIVERY - PROPOSAL FCAM AERIAL	1	
04-00-1300		PROPOSED - VEHICLE FLUIDS PLATE	1	KMEM

PART NO	S	DESCRIPTION	QTY	ID
04-00-1500		PROPOSED - MANUFACTURE GENERATED EXACT BLUEPRINT WITH BID	1	KMEM
04-00-1521	X	PROPOSED - KME and BULLDOG FAMA MEMBERSHIP	1	
04-00-1540		PROPOSED - MANUFACTURED IN THE UNITED STATES	1	KMEM
04-00-1550		PROPOSED - ISO 9001 QUALITY MANAGEMENT SYSTEM	1	KMEM
04-00-1570		PROPOSED - NFPA TREAD PLATE CERTIFICATION	1	KMEM
04-00-1700		PROPOSED - COOPERATIVE PURCHASING	1	KMEM
04-00-2440		PROPOSED - UNDERWRITERS LABORATORIES (UL) TESTING - AERIAL	1	KMEM
07-00-0015		"AERIAL FIRE APPARATUS" NFPA 2016 CHAPTERS OF COMPLIANCE	1	KMEM
08-00-0000		VEHICLE DATA PLATE DESCRIPTION	1	KMEM
14-00-0000		NFPA ROLLOVER STABILITY GENERAL STATEMENT	1	KMEM
15-00-0010	>	PROPOSED - PRINCIPAL APPARATUS DIMENSIONS & GVWR	1	KMEM
15-00-0050		!!! CRITICAL OVERALL HEIGHT REQUIREMENT !!! - "NO"	1	KMEM
15-00-0150		!!! CRITICAL OVERALL LENGTH REQUIREMENT !!! - "NO"	1	KMEM
AA-00-002A		SERVICE CENTER - PROPOSAL FCAM	1	DLR
BA-00-0305		MM LADDERS	1	KMEM
BA-00-3000		SEAT AND SEAT BELT ANCHOR TESTING	1	KMEM
BA-01-1610		<1> 100'-4-MM-HD WITH PUMP	1	KMEM
BA-01-3950		<2> TRAVEL HEIGHT 115", 100-4-MM-HD LOW BODY (WITH PUMP)	1	KMEM
BA-02-0735		<3> MM-LAD PREDATOR - TANDEM AXLE	1	KMEM
BA-04-0205		AERIAL CHASSIS, MID-MOUNT LADDER -TANDEM AXLE (HEAVY)	1	KMEM
		****** HEADER - 100" PREDATOR CAB ******	**1**	**KMEM**
BA-04-0805		PREDATOR CAB - BASE, 100"	1	KMEM
BA-04-0850		PREDATOR CAB - BASE - ALUMINUM CONSTRUCTION	1	KMEM
BA-04-0990		PREDATOR 100" - CRASH TESTING	1	KMEM
BA-04-0995		PREDATOR 100" - 120,000# ROOF & SIDE TESTING	1	KMEM
BA-04-1300		PREDATOR 100" - MFD CAB LENGTH (DIM - 62 1/2")	1	KMEM
BA-04-1800		PREDATOR 100" - DIMENSIONS FRONT SEATING & ENGINE ENCLOSURE - WIDE	1	KMEM
BA-04-4000		10" RAISED ROOF - 100" PREDATOR	1	KMEM
BA-04-5000		CAB ROOF DRIP RAIL 100" PREDATOR/PANTHER	1	KMEM
BA-05-0260		BATTERY ACCESS DOORS - REAR STEP WELLS, EACH SIDE	1	KMEM
BA-05-0610		BARRIER HEIGHT CAB DOORS, 100" PREDATOR "MFD, LFD & X-LFD"	1	KMEM
BA-05-0650		CAST ANTI-SLIP ENTRY STEPS FOR REDUCED LENGTH CAB DOORS	1	KMEM
BA-05-0700		CAB DOORS - BOLT ON WEATHER STRIP	1	KMEM
BA-05-1015		PREDATOR DOOR LATCHES, HD LOOP STYLE LATCH - BARRIER HEIGHT DOORS	1	KMEM
BA-05-1035		LOCKING CAB DOOR , OUT + IN, LOOP STYLE LATCH	1	KMEM
BA-05-1037		KEY MODEL #2001	1	KMEM
BA-05-1120		ELECTRIC WINDOWS, FOUR (4) DOORS, MFD, X-MFD, LFD CAB	1	KMEM
BA-05-1130		DOOR WINDOW TRIM EXTRUSION, 4 - DOOR	1	KMEM
BA-05-1325		FULL HEIGHT INTERIOR DOOR PANELS - BRUSH ALUM, 4 - DOOR	1	KMEM
BA-05-1510		SCOTCHLITE MATERIAL ON INTERIOR OF DOOR PANEL 4-DOORS	1	KMEM
		****** HEADER - CAB EXTERIOR ACCESSORIES & OPT, 100" PREDATOR**	**1**	**KMEM**
BA-05-2410		WINDSHIELD, 100" PREDATOR CAB	1	KMEM
BA-05-2425		WINDSHIELD WIPERS & WASHERS - 100" PREDATOR	1	KMEM
BA-05-2450		SIDE VIEWING WINDOWS NON-SLIDING - PREDATOR	1	KMEM
BA-05-2500		DARK TINT WINDOWS, SIDE VIEWING, REAR DOORS & REAR WALL	1	KMEM
BA-05-2600		GRAB RAILS EXTERIOR, KNURLED ALUMINUM EXTRUSION	1	KMEM
BA-05-2668		PREDATOR INTERIOR GRAB HANDLES - WHEELABRATED	1	KMEM
BA-05-2692		INTERIOR "A" POST GRAB HANDLE "PREDATOR" - WHEELABRATED	1	KMEM
BA-05-2715		FRONT CAB GRILLE - FORMED STAINESS STEEL MIRROR FINISHED - 100" PREDATOR	1	KMEM
BA-05-2780		FRONT CAB GRILLE SCREEN - BLACK MESH - 100" PREDATOR/PANTHER	1	KMEM
BA-05-2815		SIDE CAB GRILLES - SHAPED BRIGHT FINISHED - 100" PREDATOR	1	KMEM
BA-05-2880		SIDE CAB GRILLE SCREEN - BLACK MESH - PREDATOR/PANTHER	1	KMEM
BA-05-2900		ALUMINUM CAB WHEEL LINERS	1	KMEM
BA-05-2915		STAINLESS STEEL CAB FENDERETTES	1	KMEM
BA-05-3000		FRONT MUD FLAPS	1	KMEM
BA-05-3500		VELVAC MIRRORS " WEST COAST" HEATED / REMOTE - W/CONVEX SPOT	1	KMEM
BA-05-3690		MIRROR CONTROL IN MULTIPLEX CONTROL SCREEN	1	KMEM

PART NO	S	DESCRIPTION	QTY	ID
BA-05-5115		INTERIOR TRIM, 100" PREDATOR	1	KMEM
BA-05-5180		CUSTOM CAB INTERIOR PAINT - TEXTURED GRAY	1	KMEM
BA-05-5200		PREDATOR REAR INTERIOR CAB WALL, GRAY DURAWEAR UPHOLSTERY	1	KMEM
BA-05-5335		TREAD PLATE KICK PLATE ON LOWER INTERIOR REAR WALL	1	KMEM
BA-05-5530	>	STORAGE COMPARTMENTS UNDER FRONT SEATS - 100" PREDATOR	1	KMEM
BA-05-5610		BARYFOL FLOORING	1	KMEM
BA-05-5650		1" ACOUSTICAL INSULATION	1	KMEM
BA-05-5820		ENGINE ENCLOSURE 100" PREDATOR (ABS VINYL)	1	KMEM
BA-05-5860		ENGINE ENCLOSURE MATERIAL - ALUMINUM CAB	1	KMEM
BA-05-7040		SUN VISORS, 100" PREDATOR CAB, PADDED VINYL	1	KMEM
BA-06-0500	>	TOP ROLLOVER PROTECTION SYSTEM W/SLAVE SENSOR - FIVE (5) OR MORE SEATS	1	KMEM
		****** HEADER - CAB SEATING & ACCESSORIES, 100" - PREDATOR MFD**	**1**	**KMEM**
		****** SEATING OPTIONS USSC, 100" - PREDATOR - MFD - ROLLTEK**	**1**	**KMEM**
BA-06-329J		DRIVERS SEAT, USSC AIR SUSPENSION, ABTS - SIDE CURTAIN AIRBAG	1	KMEM
BA-06-389N		OFFICERS SEAT, USSC - FIXED BASE, SCBA, ABTS - SIDE CURTAIN AIRBAG	1	KMEM
BA-06-3910		ZICO ULLH SCBA BOTTLE BRACKET - OFFICER'S SEAT	1	KMEM
		MFD CAB - REAR FACING USSC SEATS - ROLLTEK	**1**	**KMEM**
BA-06-414M		USSC SCBA ABTS REAR FACING, OUTBOARD, DS - SIDE CURTAIN AIRBAG	1	KMEM
BA-06-4180		ZICO ULLH SCBA BOTTLE BRACKET - OUTBOARD, DS	1	KMEM
BA-06-424M		USSC SCBA ABTS REAR FACING,OUTBOARD, OS - SIDE CURTAIN AIRBAG	1	KMEM
BA-06-4280		ZICO ULLH SCBA BOTTLE BRACKET - OUTBOARD, OS	1	KMEM
		MFD CAB - FORWARD FACING USSC SEATS - ROLLTEK	**1**	**KMEM**
BA-06-7200		**** DELETE FORWARD FACING SEAT RISER - NOT REQUIRED	1	KMEM
BA-06-8055		NO SCBA PARADE COVERS SUPPLIED	1	KMEM
BA-06-8150		USSC SEATING MATERIAL - BLACK CORDURA	1	KMEM
		****** HEADER - VEHICLE DATA RECORDER SYSTEMS**	**1**	**KMEM**
BA-06-9103	>	CLASS ONE SEAT BELT WARNING SYSTEM - UP TO 6 POSITIONS - ULTRAVIEW DISP	1	KMEM
BA-06-9115		FOUR (4) SEATING POSITIONS	1	KMEM
BA-06-9250	>	HELMET HOLDERS - IN CAB - ZICO	4	KMEM
BA-06-9310		CLASS ONE VEHICLE DATA RECORDER - MULTIPLEX	1	KMEM
		****** HEADER - CAB INTERIOR ACCESSORIES & OPTIONS, 100" PREDATOR**	**1**	**KMEM**
BA-07-7010	>	STANDARD #MATM RADIO ANTENNA INSTALLED	1	KMEM
		****** HEADER - INSTRUMENTATION & CONTROLS, 100" PREDATOR - WIDE**	**1**	**KMEM**
BA-08-0210		DASH & CENTER CONSOLE - 100" PREDATOR (ABS VINYL)	1	KMEM
BA-08-0273		INSTRUMENT PANEL, 100" PREDATOR - WIDE ABS	1	KMEM
BA-08-0300		INTER AXLE LOCK CONTROL SWITCH	1	KMEM
BA-08-0315		DIESEL EXHAUST FLUID LEVEL GAUGE	1	KMEM
BA-08-0320		ENGINE COMPRESSION BRAKE CONTROLS	1	KMEM
BA-08-0640		ULTRAVIEW 700 DISPLAY ON CAB DASH FOR ES-KEY SYSTEM	1	KMEM
BA-08-1220		INDICATOR CLUSTER, 100" PREDATOR	1	KMEM
BA-08-1225		"INTER AXLE LOCK" INDICATOR CLUSTER	1	KMEM
BA-08-1235		"ATC DISABLED" INDICATOR CLUSTER	1	KMEM
BA-08-1240		"ATC ACTIVE" INDICATOR CLUSTER	1	KMEM
BA-08-1265		"OUTRIGGERS NOT STOWED" INDICATOR ON DASH	1	KMEM
BA-08-1810	>	AUXILIARY SWITCH PANEL - LOWER DASH AREA	1	KMEM
BA-08-1900		PUMP SHIFT CONTROL ON LOWER LEFT DASH PANEL	1	KMEM
BA-08-1950		MULTIPLEX CONTROL PUMP SHIFT SWITCH - MULTIPLEX	1	KMEM
BA-08-2000		AERIAL LADDER, LADDER POWER/PTO SWITCHES IN CAB	1	KMEM
BA-08-2703		FLAT DASH IN FRONT OF OFFICER (ABS), 100" PREDATOR	1	KMEM
BA-08-2905		OVERHEAD ABS PANEL, FLAT FACED, 100" PREDATOR	1	KMEM
BA-08-3105		HEATER/DEFROSTER & ACCESS, PREDATOR 100" - 10" RAISED ROOF	1	KMEM
BA-08-6900		HVAC CONTROL SYSTEM - INCOPORATED INTO MULTIPLEX CONTROL DISPLAY	1	KMEM
BA-08-9000		CAB TILT SYSTEM & OPTIONS	1	KMEM
BA-08-9010	>	AUXILIARY - MANUAL CAB LIFT BACKUP SYSTEM	1	KMEM
BA-08-9110		PARKING BRAKE/CAB TILT INTERLOCK	1	KMEM
		FRAME & AXLE PACKAGE, MID-MOUNT TANDEM AXLE CHASSIS	**1**	**KMEM**
BA-09-5500		110,000 PSI FRAME: MID-MOUNT AERIAL CHASSIS, SPECIAL FRAME	1	KMEM

PART NO	S	DESCRIPTION	QTY	ID
		HEADER - FRONT BUMPER, EXTENSIONS & ACCESSORIES	**1**	**KMEM**
BA-10-0050	>	BUMPER 12" STAINLESS STEEL CONTOUR - ALL CABS	1	KMEM
BA-10-0097		**** REQ 10" EXT MIN, MECH SIREN SEMI RECES. IN BUMPER, CENTER ****	1	KMEM
BA-10-0110		10" FRONT BUMPER EXTENSION WITH TREAD PLATE GRAVEL SHIELD	1	KMEM
BA-10-0405		TREADPLATE GRAVEL SHIELD STANDARD INSTALLATION	1	KMEM
BA-10-2010		TWO (2) PAINTED TOW HOOKS BELOW FRONT BUMPER	1	KMEM
BA-14-0170		23,000# FRONT AXLE MERITOR MFS-20-133A-N	1	KMEM
BA-14-1110		MERITOR, EX-225 17" DISC BRAKES, FRONT AXLE, W/ AUTO SLACK ADJUSTMENT	1	KMEM
BA-14-2040		SUSPENSION FRONT - 23,000# AXLES	1	KMEM
BA-14-2110		FRONT AXLE SHOCK ABSORBERS - MONROE "MAGNUM - 70"	1	KMEM
BA-15-1060		58,000# TANDEM REAR AXLE MERITOR RT-58-185	1	KMEM
BA-15-1505		16.5" X 8.6" S-CAM BRAKES - MERITOR REAR TANDEM W/ AUTO SLACK ADJ.	1	KMEM
BA-15-2810		VEHICLE TOP SPEED - 2016 NFPA STATEMENT	1	KMEM
BA-15-4830	>	HENDRICKSON FIREMAAX, FMX-622 AIR RIDE- TA 62,000#	1	KMEM
		****** HEADER - BRAKE SYSTEM, TANDEM AXLE VEHICLE**	**1**	**KMEM**
BA-20-1005		BRAKE SYSTEM, TA CHASSIS	1	KMEM
BA-20-1110		ABS BRAKING FOR TANDEM REAR AXLE CHASSIS	1	KMEM
BA-20-1275	>	ELECTRONIC STABILITY CONTROL (ESC) WITH (ATC) - CUSTOM TA	1	KMEM
BA-20-1530		AIR RESERVOIRS 7100 CU IN TA, BASE	1	KMEM
BA-20-1810		STAINLESS STEEL AIR TANK BRACKETS - (4 TANKS)	1	KMEM
BA-20-2010		HEATED AUTOMATIC MOISTURE EJECTOR ON THE PRIMARY TANK	1	KMEM
BA-20-2025		1/4 TURN DRAIN VALVES ON ALL AIR TANKS	1	KMEM
BA-20-3000		AIR DRYER, HEATED - BENDIX AD-9 12VOLT	1	KMEM
BA-20-5005		COLOR CODED SYNFLEX BRAKE LINES W/QUICK RELEASE FITTINGS - TA	1	KMEM
BA-20-5500		AIR COMPRESSOR -WABCO 18.7 CFM- STD. FOR ALL CUMMINS ENGINES	1	KMEM
BA-20-5810		BRAKE TREADLE VALVE	1	KMEM
BA-20-6010		PARKING BRAKE CONTROL - NEAR DRIVER - ALL WHEEL LOCK	1	KMEM
		HEADER, TIRE AND WHEEL OPTIONS	**1**	**KMEM**
		HEADER, WHEELS, 23,000 FRONT AXLE - ALUMINUM	**1**	**KMEM**
BA-25-1040		FRONT WHEELS, POLISHED ALUMINUM, 22.5 X 13, 24,390#	1	KMEM
BA-25-1045		FRONT WHEELS, LUG AND HUB TRIM (ALUMINUM WHEELS)	1	KMEM
BA-25-2030	>	FRONT, GOODYEAR 425/65R22.5 L 24,400# G296 MSA MIXED - 68MPH	1	KMEM
BA-25-2400		GOODYEAR - FIRE SERVICE RATING - TIRE RESTRICTIONS	1	KMEM
		HEADER, TIRES & WHEELS, 58,000 TANDEM REAR AXLE	**1**	**KMEM**
BA-25-5090		REAR WHEELS, POLISHED ALUMINUM, 22.5 X 9, TA	1	KMEM
BA-25-5115		REAR WHEELS, LUG AND HUB TRIM, TA (ALUMINUM)	1	KMEM
BA-25-7055	>	REAR, GDYR 315/80R22.5 J 64,000# RHD II+ TRACTION - 75MPH, TA	1	KMEM
BA-25-7400		GOODYEAR - FIRE SERVICE RATING - TIRE RESTRICTIONS	1	KMEM
BA-25-9905		TIRE PRESSURE MONITORING - LED VALVE STEM CAPS - TEN TIRES	1	KMEM
		100" PREDATOR - ENGINE PACKAGE, MID-MOUNT TANDEM AXLE CHASSIS	**1**	**KMEM**
		****** 100" - HEADER, ENGINE & ENGINE COMPONENTS**	**1**	**KMEM**
BA-30-2215		CUMMINS ISX15 - 500 HP @ 1600 RPM TQ 1850 lb-ft @ 1200 - PREDATOR WIDE	1	KMEM
BA-30-9810		PROPOSED - ENGINE CERTIFICATION CUSTOM CHASSIS	1	KMEM
BA-32-0030		COOLING/RADIATOR, 100" PREDATOR - WIDE	1	KMEM
BA-32-0070		ENGINE COOLANT FILTER - CUMMINS ISC - ISX	1	KMEM
BA-32-0085		COOLING SYSTEM CRITERIA	1	KMEM
BA-32-0100		TRANSMISSION COOLER	1	KMEM
BA-32-0120		RADIATOR SKID PLATE	1	KMEM
BA-32-0180		CHARGED AIR COOLER (STACK MOUNT), 100" PREDATOR CAB	1	KMEM
BA-32-0250		COOLANT FAN, W/CLUTCH - CUMMINS ISX15	1	KMEM
BA-32-0340		HEATER AND COOLANT HOSES/PIPING	1	KMEM
BA-32-0420		LOW COOLANT INDICATOR LIGHT AND ALARM IN CAB	1	KMEM
BA-33-0020	>	SECONDARY BRAKING - ENGINE COMPRESSION BRAKE	1	KMEM
BA-33-0150		FAST IDLE CONTROL FOR ALL ELECTRONIC ENGINES - SMART WHEEL	1	KMEM
BA-33-0160		ENGINE AIR CLEANER	1	KMEM
BA-33-0180		SPARK ARRESTOR	1	KMEM
BA-33-0200		ACCELERATOR PEDAL - FLOOR MOUNT	1	KMEM

PART NO	S	DESCRIPTION	QTY	ID
BA-33-0250		REMOTE THROTTLE & INTERLOCK HARNESS	1	KMEM
BA-40-0300		ALLISON 4000EVS TRANS. - COMPRESSION BRAKE	1	KMEM
BA-40-0660		FIVE (5) SPEED AUTOMATIC TRANSMISSION - 4000 SERIES	1	KMEM
BA-40-0700		ALLISON TRANSMISSIONS, ELECTRONIC TOUCH PAD SHIFTER IN CAB	1	KMEM
BA-40-0855		TRANSMISSION OIL LEVEL SENSOR	1	KMEM
BA-40-0860		ALLISON PARK TO NEUTRAL	1	KMEM
BA-40-0910		ALLISON PRESELECT PROGRAMMING	1	KMEM
BA-40-0920		PRESELECT PROGRAMMED FOR 4TH GEAR	1	KMEM
BA-40-4750	>	TES 295 SYNTHETIC TRANS FLUID 4000EVS TRANSMISSION	1	KMEM
BA-45-0110		DRIVE LINES DANA-SPICER #1810 SERIES	1	KMEM
BA-49-0100		DIESEL EXHAUST FLUID TANK - 5 GALLON	1	KMEM
BA-50-0110		EXHAUST SYSTEM - DPF & SCR SYSTEM - INLINE SYSTEM	1	KMEM
BA-50-0155		ALUMINIZED STEEL EXHAUST TAILPIPE/OUTLET OS - DPF + SCR SYSTEM	1	KMEM
BA-50-2500		FUEL SYSTEM	1	KMEM
BA-50-2515	>	FUEL TANK - 65 GALLON, STEEL - ALL MID-MOUNTS	1	KMEM
BA-50-2600		STAINLESS STEEL FUEL TANK STRAPS IN LIEU OF STEEL	1	KMEM
BA-50-2625		FUEL LINES - FIBER REINFORCED HOSE	1	KMEM
BA-50-2635		FUEL LINE SHUT-OFF VALVE	1	KMEM
BA-50-2645	>	CUMMINS FUEL-WATER SEPARATOR	1	KMEM
BA-50-2670		FUEL PUMP SECONDARY ELECTRIC, REQ. ON 210" W-B OR LONGER	1	KMEM
BA-50-2700		FUEL POCKET, LEFT SIDE REAR WHEEL WELL PANEL	1	KMEM
BA-50-5050	>	STEERING - DUAL SHEPPARD POWER STEERING GEARS	1	KMEM
BA-50-7110		STEERING COLUMN - CLOCK SPRING	1	KMEM
BA-50-7150		18" STEERING WHEEL - 4 SPOKE	1	KMEM
BA-50-7170		SMART WHEEL CONTROLS ON STEERING WHEEL	1	KMEM
BA-50-7202	>	DELETE - 4FRONT - FRONTAL AIR BAG PROTECTION SYSTEM IN STEERING WHEEL	1	KMEM
BA-50-9000		ROAD SAFETY KITS	1	KMEM
		****** HEADER, MM LADDER CHASSIS ELECTRICAL, 100" PREDATOR (OPTIONS)**	**1**	**KMEM**
		****** HEADER, MM LADDER W/ PUMP BODY ELECTRICAL (OPTIONS)**	**1**	**KMEM**
BE-01-0005		PREDATOR CHASSIS ELECTRICAL SYSTEM DESCRIPTION	1	KMEM
BE-01-0105		PREDATOR CHASSIS WIRING INSTALLATION	1	KMEM
BE-01-0150		DIRECT BATTERY GROUNDING STRAP - PREDATOR	1	KMEM
BE-01-0153		EMI/RFI PROTECTION	1	KMEM
BE-01-0205		PREDATOR 12 VOLT ELECTRICAL SYSTEM TESTING	1	KMEM
BE-05-0353		CLASS-1 ES-KEY MULTI-PLEXED ELECTRICAL SYSTEM 100" PREDATOR	1	KMEM
BE-05-0460		CLASS-1 ES-KEY ULTRAVIEW 700 DISPLAY	1	KMEM
BE-05-0800		INTER-LOCK MODULE FOR MULTIPLEX SYSTEM	1	KMEM
BE-05-0810		WELDON SWIVEL MOUNTING BRACKET FOR CONTROL SCREEN	1	KMEM
BE-05-0900		CHASSIS DIAGNOSTICS SYSTEM	1	KMEM
BE-05-1160		VOLTAGE MONITORING SYSTEM - 12 VOLT	1	KMEM
BE-05-1165		INDICATOR LIGHT AND ALARM PROVE-OUT SYSTEM	1	KMEM
BE-05-1170		SEQUENCER	1	KMEM
BE-05-1175		ELECTRICAL HARNESS INSTALLATION - 12 VOLT	1	KMEM
BE-10-0487		DELCO REMY 40SI, 320 AMP BRUSHLESS ALTERNATOR	1	KMEM
BE-15-0730		BATTERIES - SIX (6) EXIDE GROUP 31, 925CCA	1	KMEM
BE-15-1105		PREDATOR BATTERY STORAGE, STEEL, MFD, XMFD, LFD, XLFD	1	KMEM
BE-15-1500		BATTERY DISCONNECT SWITCH, ALL UNITS	1	KMEM
BE-15-1555		COLE HERSEE BATTERY JUMPER STUDS, DS BATTERY BOX	1	KMEM
BE-20-1635		120 VOLT 20 AMP SUPER AUTO EJECT FOR BATT CHARGER - CUSTOM	1	KMEM
BE-20-1715		SHORELINE RECEPTACLE LABEL - NFPA	1	KMEM
BE-20-1720		RED COVER FOR KUSSMAUL AUTO-EJECT RECEPTACLE, #091-55RD	1	KMEM
BE-20-1750		SHORELINE LOCATION - ADJACENT TO DRIVER'S DOOR	1	KMEM
BE-20-2000		KUSSMAUL MODEL 1200, 40AMP, BATTERY CHARGER	1	KMEM
BE-30-2750		CONTROL SWITCHING THROUGH MULTIPLEX TOUCH SCREENS	1	KMEM
BF-00-0515		WELDON #8080-8000-13 WHITE/RED LED INTERIOR LIGHTS (4)	1	KMEM
BF-00-5000		DOOR OPEN INDICATOR W/ INTEGRAL AUDIBLE ALARM	1	KMEM
		****** HEADER, 12V POWER/ USB CHARGING/ POWER - GROUND CIRCUITS, CUSTOM ******	**1**	**KMEM**

PART NO	S	DESCRIPTION	QTY	ID
BF-01-1020	>	12 VOLT POWER PORT LOCATED IN CAB AS DIRECTED	1	KMEM
BF-01-4200	>	KUSSMAUL USB CHARGING PORT LOCATED IN CAB AS DIRECTED	1	KMEM
BF-01-6000		12 VOLT POWER AND GROUND CIRCUIT FOR ACCESSORIES IN DASH	1	KMEM
		****** HEADER, REAR/SIDE VISION CAMERA SYSTEMS ******	**1**	**KMEM**
BF-20-0045		DUAL HEADLIGHTS, LED, PREDATOR - J.W. SPEAKER - DUAL BEZELS	1	KMEM
BF-20-0320		DAYTIME RUNNING LIGHTS, ALL CABS	1	KMEM
BG-00-0055		DUAL MODULE w/ CODE 3 65STA LED TURN SIGNAL & REQ WARN LIGHT	1	KMEM
BG-00-0420		CUST MM LADDER CHASSIS LED MARKER LIGHTS	1	KMEM
BG-00-0520		CUST MM LADDER BODY LED MARKER LIGHTS	1	KMEM
BG-00-1200		WHELEN LED MARKER LIGHTS @ TOP FRONT ROOF EDGE OF CAB	1	KMEM
BG-00-1600		TRUCK-LITE MARKER LIGHTS @ EA SIDE OF CAB, ADJACENT TO DRIVER DOOR	1	KMEM
BG-00-1610		TRUCK-LITE MARKER/TURN LIGHTS @ EA SIDE OF BODY	1	KMEM
BG-00-1660		TRUCK-LITE MARKER LIGHTS @ REAR OF BODY	1	KMEM
BG-00-1800		TRUCK-LITE DOT AMBER REFLECTORS @ SIDE OF BODY	1	KMEM
BG-00-1810		TRUCK-LITE DOT RED REFLECTORS @ REAR OF BODY	1	KMEM
BG-00-2915		TECNIQ #L10 LED LICENSE PLATE LIGHT @ DS REAR OF BODY	1	KMEM
BG-02-2525		CODE 3, #65 LED BRAKE & TURN W/ HALOGEN REVERSE	1	KMEM
BH-04-1050		CAB STEP LIGHTS, TECNIQ EON 3 LED, ALL DEVICES	4	KMEM
BH-04-1130		BODY STEP LIGHTS, TECNIQ EON 3 LED, ALL DEVICES	4	KMEM
BH-05-2310		AERIAL ACCESS LADDER ILLUMINATION - WHELEN 3" LED - MM BODY	1	KMEM
	>	****** HEADER, HOSE BED LIGHTING ******	**1**	**KMEM**
BH-06-0100		UNITY HOSE BED LIGHTS, ALL DEVICES	1	KMEM
BH-06-2200		HOSE BED WORK LIGHT - SWITCH	1	KMEM
		****** HEADER, SCENE LIGHTS - MM / TDA**	**1**	**KMEM**
		****** HEADER, SCENE LIGHTS - MM PLATFORM W/ PUMP**	**1**	**KMEM**
BH-11-0500		NFPA (4) JW SPEAKER LED RECTANGLE GROUND LIGHTS, BELOW CAB DOORS	1	KMEM
BH-11-0540		GROUND LIGHTS, 2 LED UNDER FRONT BUMPER FACING FORWARD - RH	1	KMEM
BH-11-0560		GROUND LIGHTS, 2 LED BELOW PUMP PANEL RUNNING BOARD - RH	1	KMEM
BH-11-0585		GROUND LIGHTS, 2 LED, AT REAR BODY CORNERS - RH	1	KMEM
BH-11-3750		CAB AND BODY GROUND LIGHTS ACTIVATE WITH PARKING BRAKE	1	KMEM
BH-11-3765		CAB AND BODY GROUND LIGHTS - SWITCH @ IN CAB	1	KMEM
		****** HEADER, BROW AND CAB RADIUS LIGHTS - CUSTOM CHASSIS**	**1**	**KMEM**
		****** HEADER, TELESCOPING LIGHTS, REAR OF CAB - CUSTOM CHASSIS**	**1**	**KMEM**
BH-12-2200		FRC BROW LIGHT, SPECTRA LED, 155W12V, (1) ABOVE WINDSHIELD	1	KMEM
BH-14-0020		CONTROL SWITCH IN CAB FOR LIGHT(S) ABOVE WINDSHIELD	1	KMEM
BI-00-0200		AERIAL BODY ELECTRICAL SYSTEM	1	KMEM
BI-00-0205		AERIAL BODY ELECTRICAL JUNCTION COMPARTMENT	1	KMEM
BI-00-0215		MID-MOUNT, AERIAL DEVICE ELECTRICAL JUNCTION COMPARTMENT	1	KMEM
BI-00-0525		BODY ELECTRICAL HARNESS - ES-KEY	1	KMEM
BJ-00-5115		PUMP ENCLOSURE WORK LIGHTS - TECNIQ LED	1	KMEM
BJ-00-5165		ENGINE COMPARTMENT WORK LIGHTS - TECNIQ LED	1	KMEM
		COMPARTMENT LIGHTS - MID MOUNT TANDEM AXLE	**1**	**KMEM**
BJ-02-1055	>	COMPT. LIGHTS, TECNIQ E18 LED	11	KMEM
		****** CUSTOM MID MOUNT AERIAL NFPA WARNING LIGHT PACKAGE**	**1**	**KMEM**
BL-95-0000		NFPA COMPLIANT WARNING LIGHT PACKAGE - ALL UNITS	1	KMEM
BL-95-0100		LIGHT PACKAGE ACTUATION/CONTROLS - ALL UNITS	1	KMEM
BL-98-0000		WARNING LIGHT FLASH PATTERN - NFPA FLASH PATTERN	1	KMEM
BM-00-0204		CODE 3 UPPER PACKAGE - CUSTOM MID MOUNT AERIAL	1	KMEM
BM-01-0505	>	LIGHTBAR RISER FOR SCENE LIGHT CLEARANCE	1	KMEM
BM-02-0086	>	A-UPPER, CODE 3 LED 2780NFPA P1, RX 2700 80" PRIZM II BAR	1	KMEM
BM-02-1000		C-UPPER, CODE 3 HALOGEN 550 BEACONS, RED DRIVER, AMBER OFFICER	1	KMEM
BM-02-2000		B/D-UPPER REAR, COVERED BY LIGHTS IN ZONE C-UPPER	1	KMEM
BM-02-3000		B/D-UPPER FRONT, COVERED BY LIGHTS IN ZONE A-UPPER	1	KMEM
BM-07-0204		CODE 3 LOWER PACKAGE - CUSTOM MID MOUNT AERIAL	1	KMEM
BM-09-0018	>	A-LOWER FRONT, CODE 3 65 SERIES LED	1	KMEM
BM-09-0098		A-LOWER FRONT MOUNTING, CUSTOM CHASSIS	1	KMEM
BM-09-1014	>	C-LOWER REAR, CODE 3 65 SERIES LED	1	KMEM
BM-09-2006	>	B/D-LOWER FRONT, CODE 3 65 SERIES LED	1	KMEM

PART NO	S	DESCRIPTION	QTY	ID
BM-09-2098		B/D-LOWER FRONT MOUNTING, CUSTOM CHASSIS	1	KMEM
BM-09-3006	>	B/D-LOWER MID, CODE 3 65 SERIES LED	1	KMEM
BM-09-3506	>	B/D-LOWER SECONDARY MID, CODE 3 65 SERIES LED	1	KMEM
BM-09-4006	>	B/D-LOWER REAR, CODE 3 65 SERIES LED	1	KMEM
BM-15-0000		LIGHT PACKAGE NFPA CERTIFICATION - ALL UNITS	1	KMEM
		****** HEADER, OPTIONAL WARNING LIGHTS**	**1**	**KMEM**
		****** HEADER, AUDIBLE WARNING & COMMUNICATION EQUIPMENT**	**1**	**KMEM**
BW-00-0510		CHASSIS SINGLE ELECTRIC (DOT) HORN	1	KMEM
BW-00-0560		CODE 3, #CA278, BACK-UP ALARM - 87DBA	1	KMEM
BW-00-5000	>	DUAL CHROME AIR HORNS	1	KMEM
BW-00-5100		DUAL AIR HORNS RECESSED IN FRONT BUMPER, STD	1	KMEM
BW-00-5200		AIR HORN CTRL - FOOT FOR OFFICER & STEERING WHEEL FOR DRIVER	1	KMEM
BW-01-0120		SIREN, WHELEN # 295HFS2, 100W - FLUSH MOUNT	1	KMEM
BW-01-1000		ONE (1) WHELEN SP123BMC SPEAKER	1	KMEM
BW-02-0000	>	FEDERAL Q2B SIREN @ CAB FRONT	1	KMEM
BW-02-0035		Q2B MOUNT - SEMI-RECESSED INTO CENTER OF BUMPER	1	KMEM
BW-02-2000		SIREN CONTROL - FLOOR SWITCH, DRIVER AND OFFICER	1	KMEM
		****** HEADER, PUMP, TANK & ACC, 100' HD 4-SECT, MM**	**1**	**KMEM**
DC-00-2370		WATEROUS S100, 2000 GPM SINGLE STAGE PUMP - MID MOUNT	1	KMEM
DC-01-4630		WATEROUS S100 MECHANICAL PUMP SEAL	1	KMEM
DC-01-610A	>	*** ISX-15 ENGINE HAS HIGH TORQUE RATING - "K" GEARBOX IS REQUIRED W/HALE PUMP *	1	KMEM
DC-01-6211		WATEROUS "C20" DRIVE UNIT, WATEROUS MID-MOUNT (FRONT DRIVE)	1	KMEM
DC-01-6490		PUMP RATIO (HALE, WATEROUS OR DARLEY)	1	KMEM
DC-01-7140		WATEROUS AIR SHIFT	1	KMEM
DC-01-8590		PUMP SHIFT MANUAL OVERRIDE (HALE, WATEROUS OR DARLEY)	1	KMEM
DC-01-8615		WATEROUS PUMP SHIFT INDICATOR LIGHTS	1	KMEM
DC-01-9020		TRANSMISSION LOCK-UP (HALE, WATEROUS OR DARLEY)	1	KMEM
DC-02-1900		PUMP MOUNTS - MID-SHIP PUMPS	1	KMEM
DC-02-1990		PUMP INSTALLATION - CUSTOM	1	KMEM
DC-04-0120		MANIFOLD - DISCHARGE & SUCTION FOR 1250-2000 GPM INTERFACE PUMPING SYSTEM	1	KMEM
		****** HEADER, WATEROUS S100, PRESSURE CONTROL - MID MOUNT**	**1**	**KMEM**
DC-05-1226		FIRE RESEARCH "IN CONTROL" TGA-400 PRESSURE GOVERNOR	1	KMEM
DC-05-1280		AKRON STYLE #59 INTAKE RELIEF VALVE	1	KMEM
DC-05-2500		PUMP UL CERTIFICATION - 750 GPM & UP	1	KMEM
		WATEROUS, PUMP PRIMING PUMP AND CONTROLS	**1**	**KMEM**
DC-05-3690	>	TRIDENT "AUTOMATIC" AIR PRIMING SYSTEM	1	KMEM
		WATEROUS, DRAINS & ACCESSORES	**1**	**KMEM**
DC-05-5110		ROTARY MASTER DRAIN VALVE	1	KMEM
DC-05-5400		DRAINS/BLEEDER "INNOVATIVE CONTROLS" LIFT UP @ ALL 1-1/2" OR LARGER	1	KMEM
DC-05-5500		SYNFLEX SUCTION, DISCHARGE, PRESSURE AND CONTROL LINES	1	KMEM
DC-05-6225		WATEROUS ANODE BLOCKS - 4 TOTAL	1	KMEM
DC-10-2020		SIDE MOUNT PUMP MODULE, MM AERIAL	1	KMEM
DC-10-2500		PUMP MODULE - STEEL CONSTRUCTION	1	KMEM
DC-10-3315		TWO (2) HADES 20K BTU HOT WATER HEATERS FOR PUMP ENCLOSURE	1	KMEM
		****** HEADER, SUCTIONS - MIDMOUNT, SIDE MOUNT**	**1**	**KMEM**
DC-14-3350		WATEROUS MAIN SUCTION INLETS 6" NST, 2000 GPM S100 PUMP	1	KMEM
DC-14-5300		SHORT NECK MAIN PUMP SUCTION INLETS - DS & OS	1	KMEM
DC-14-5560	>	6" NST MAIN PUMP SUCTION PRESSURE VENTED CAPS (2)	1	KMEM
		HEADER - AUXILIARY SUCTION/S - AERIALS	**1**	**KMEM**
DC-20-1000		2 1/2" AUX. SIDE SUCTION @ DS PANEL TO REAR OF MAIN INLET	1	KMEM
DC-20-1100		2 1/2" AKRON #8800 S.S. BALL VALVE, DS REAR AUX SUCTION	1	KMEM
DC-20-1200		SWING CONTROL @ VALVE, DS REAR AUX SUCTION	1	KMEM
DC-20-9500		BEHIND PANEL MOUNT	1	KMEM
		****** HEADER - TANK TO PUMP - MID-MOUNTS**	**1**	**KMEM**
DC-25-1200		TANK TO PUMP - 3" VALVE - LADDERS & PLATFORMS	1	KMEM
DC-25-3110		3" AKRON #8800 SERIES - S.S. BALL, VALVE , TANK TO PUMP	1	KMEM
DC-25-5110		3" PUSH/PULL CONTROL FOR TANK TO PUMP	1	KMEM

PART NO	S	DESCRIPTION	QTY	ID
		****** HEADER - TANK FILL - MID-MOUNTS**	**1**	**KMEM**
DC-30-2100		TANK FILL LINE 2" FROM PUMP - SIDE MOUNT	1	KMEM
DC-30-2300		2" AKRON #8800 SERIES - S.S. BALL TANK FILL, SIDE MOUN	1	KMEM
DC-30-6500		PUSH/PULL CONTROL FOR TANK FILL	1	KMEM
		****** DISCHARGES & ACCESSORIES, MID MOUNT AERIAL - SIDE MOUNT**	**1**	**KMEM**
		DRIVER'S SIDE #1 MAIN DISCHARGE	**1**	**KMEM**
DC-35-0010		DS MAIN DISCHARGE #1 - SIDE MOUNT	1	KMEM
DC-35-0110		2 1/2" AKRON #8800 SERIES - S.S. BALL, DS #1, SIDE MOUNT	1	KMEM
DC-35-1815		DS #1 DISCH - 2 1/2" STRAIGHT NST & 30-DEGREE NST ELBOW	1	KMEM
DC-35-2010		2 1/2" NST PRESSURE VENTED CAP - DS DISCHARGE #1	1	KMEM
DC-35-2410		PUSH/PULL CONTROL FOR DS DISCHARGE #1 -SIDE MOUNT	1	KMEM
DC-35-3110		INNOVATIVE CONTROLS LIQUID FILLED 2 1/2" PRESS GAUGE SS- DS DISCHARGE #1	1	KMEM
		DRIVER'S SIDE #2 MAIN DISCHARGE	**1**	**KMEM**
DC-35-5010		DS MAIN DISCHARGE #2 - SIDE MOUNT	1	KMEM
DC-35-5110		2 1/2" AKRON #8800 SERIES - S.S. BALL, DS #2, SIDE MOUNT	1	KMEM
DC-35-6815		DS #2 DISCH - 2 1/2" STRAIGHT NST & 30-DEGREE NST ELBOW	1	KMEM
DC-35-7010		2 1/2" NST PRESSURE VENTED CAP - DS DISCHARGE #2	1	KMEM
DC-35-7410		PUSH/PULL CONTROL FOR DS DISCHARGE #2 -SIDE MOUNT	1	KMEM
DC-35-8110		INNOVATIVE CONTROLS LIQUID FILLED 2 1/2" PRESS GAUGE SS- DS DISCHARGE #2	1	KMEM
		OFFICER'S SIDE #1 MAIN DISCHARGE	**1**	**KMEM**
DC-39-0010	>	OS MAIN DISCHARGE #1 - SIDE MOUNT	1	KMEM
DC-39-0110		2 1/2" AKRON #8800 SERIES - S.S. BALL, OS #1, SIDE MOUNT	1	KMEM
DC-39-1815		OS #1 DISCH - 2 1/2" STRAIGHT NST & 30-DEGREE NST ELBOW	1	KMEM
DC-39-2010		2 1/2" NST PRESSURE VENTED CAP - OS DISCHARGE #1	1	KMEM
DC-39-2410		PUSH/PULL CONTROL FOR OS DISCHARGE #1 -SIDE MOUNT	1	KMEM
DC-39-3110		INNOVATIVE CONTROLS LIQUID FILLED 2 1/2" PRESS GAUGE SS- OS DISCHARGE #1	1	KMEM
		OFFICER'S SIDE #2 MAIN DISCHARGE	**1**	**KMEM**
DC-39-5010	>	OS MAIN DISCHARGE #2 - SIDE MOUNT	1	KMEM
DC-39-5130	>	4" AKRON #8840 VALVE, OS #2, SIDE MOUNT	1	KMEM
DC-39-6865	>	OS #2 DISCH - 4" STRAIGHT NST	1	KMEM
DC-39-7045		DELETE 4" NST CAP - OS DISCHARGE #2	1	KMEM
DC-39-7315		4" NSTF X 4" STORZ KOCHEK SKE-R 30° ADAPTER WITH CAP OS	1	KMEM
DC-39-7545		4" AKRON #9323 ELECTRIC VALVE CONTROL FOR OS DISCHARGE #2	1	KMEM
DC-39-8110		INNOVATIVE CONTROLS LIQUID FILLED 2 1/2" PRESS GAUGE SS- OS DISCHARGE #2	1	KMEM
		CROSSLAY #1 DISCHARGE	**1**	**KMEM**
DC-47-0400		CROSSLAY #1, 1 1/2" - AERIAL	1	KMEM
DC-47-1110		CROSSLAY #1 CAPACITY - 200' OF 1 3/4" HOSE	1	KMEM
DC-47-1410		CROSSLAY #1 - DOUBLE STACK HOSE DESIGN	1	KMEM
DC-47-1510		1 1/2" NST CHICKSAN SWIVEL - CROSSLAY #1	1	KMEM
DC-47-2110		CROSSLAY #1, PLUMBING, 2" STAINLESS STEEL PIPING	1	KMEM
DC-47-2210		2" AKRON #8800 SERIES - S.S. BALL, VALVE CROSSLAY #1, DISCH	1	KMEM
DC-47-2610		PUSH/PULL 1/4 TURN CONTROL CROSSLAY #1	1	KMEM
DC-47-3210		INNOVATIVE CONTROLS LIQUID FILLED 2 1/2" PRESS GAUGE SS - CROSSLAY #1	1	KMEM
		CROSSLAY #2 DISCHARGE	**1**	**KMEM**
DC-47-5400		CROSSLAY #2, 1 1/2" - AERIAL	1	KMEM
DC-47-6110		CROSSLAY #2 CAPACITY - 200' OF 1 3/4" HOSE	1	KMEM
DC-47-6410		CROSSLAY #2 - DOUBLE STACK HOSE DESIGN	1	KMEM
DC-47-6510		1 1/2" NST CHICKSAN SWIVEL - CROSSLAY #2	1	KMEM
DC-47-7110		CROSSLAY #2, PLUMBING, 2" STAINLESS STEEL PIPING	1	KMEM
DC-47-7210		2" AKRON #8800 SERIES - S.S. BALL, VALVE CROSSLAY #2,	1	KMEM
DC-47-7610		PUSH/PULL 1/4 TURN CONTROL CROSSLAY #2	1	KMEM
DC-47-8210		INNOVATIVE CONTROLS LIQUID FILLED 2 1/2" PRESS GAUGE SS - CROSSLAY #2	1	KMEM
		CROSSLAY OPTIONS - MM AERIAL	**1**	**KMEM**
DC-50-7015	>	VINYL CROSS LAY COVER	1	KMEM

PART NO	S	DESCRIPTION	QTY	ID
DC-50-7030		CROSSLAY COVER RED IN COLOR	1	KMEM
	>	**WATERWAY DISCHARGE**	**1**	**KMEM**
DC-62-0225		AERIAL WATERWAY DISCHARGE - MM AERIAL	1	KMEM
DC-62-1150		WATERWAY DISCHARGE, PLUMBING, 5" STAINLESS STEEL - MM	1	KMEM
DC-62-1240		4" AKRON #8840 SERIES VALVE, WATERWAY	1	KMEM
DC-62-1760		4" AKRON #9323 ELECTRIC VALVE CONTROL FOR WATERWAY	1	KMEM
DC-62-2405	>	FIRE RESEARCH FLOW/PRESS METER, INSIGHT ULTIMATE LIGHTED - WATERWAY	1	KMEM
		PUMP PANELS & ACCESSORIES	**1**	**KMEM**
DD-65-0510		SIDE MOUNT PUMP PANEL - MID-MOUNT	1	KMEM
DD-65-4125		SIDE MOUNT PANELS - BLACK LINE-X COATED	1	KMEM
DD-65-4715		HORIZONTALLY HINGED GAUGE PANEL - MID-MOUNT	1	KMEM
DD-65-4810		OFFICER SIDE VERTICALLY HINGED PUMP ACCESS DOOR - SIDE MOUNT	1	KMEM
DD-65-4820		PUMP ACCESS DOORS - MID-MOUNT	1	KMEM
DD-65-5150		PANEL FASTENERS	1	KMEM
DD-65-5510		CAPS AND ADAPTERS SAFETY TETHER - BALL CHAIN	1	KMEM
DD-65-8820		PUMP PANEL DISCH./SUCTION TRIM PLATES, HIGH POLISHED	1	KMEM
DD-65-9000		DISCHARGE GAUGE TRIM BEZELS	1	KMEM
DD-65-9110		IDENTIFICATION PLATES	1	KMEM
DD-66-0300		PUMP OPERATOR'S PANEL LIGHT SHIELD - MID-MOUNT	1	KMEM
DD-66-0340		TECNIQ E18 LED LIGHTS - MID-MOUNT	1	KMEM
DD-66-2100		OS PUMP PANEL LIGHTING	1	KMEM
DD-66-2130		TECNIQ EON 3 LED LIGHTS - OS PUMP PANEL	1	KMEM
		PUMP OPERATOR'S PANEL - SIDE MOUNT, AERIAL - MID MOUNT	**1**	**KMEM**
DD-70-2150		AIR HORN CONTROL BUTTON ON PUMP PANEL	1	KMEM
DD-70-2230		AERIAL COMMUNICATION SUSTEM AT PUMP OPERATOR'S PANEL	1	KMEM
DD-70-2290		3/4" PUMP BY-PASS COOLER ON PUMP PANEL	1	KMEM
DD-70-2300		AIR INLET/OUTLET ON RIGHT SIDE PUMP PANEL	1	KMEM
DD-70-2335		FIRE RESEARCH "IN CONTROL" PRESSURE GOVERNOR CONTROL @ PANEL	1	KMEM
DD-70-2410		PUMP PRESSURE & VACUUM TEST PORTS @ PANEL	1	KMEM
DD-70-4120		MASTER PRESSURE & COMPOUND GAUGES - 4" NOMINAL GAUGES	1	KMEM
DD-70-4130		**** CONSIDER DELETING MASTER GAUGES - IN GOVERNOR DISPLAY ****	1	KMEM
DD-70-4220		4" INNOVATIVE CONTROLS MASTER PRESSURE AND COMPOUND GAUGES	1	KMEM
DD-70-4680		PRESSURE & COMPOUND GAUGE RANGES - SINGLE STAGE	1	KMEM
DD-70-4900		AUXILIARY ENGINE COOLER	1	KMEM
		WATER TANK LEVEL GAUGE - AERIAL, MID-MOUNT	**1**	**KMEM**
DD-72-0410		FIRE RES - TANK VISION #WLA300-A00 LED WATER TANK GAUGE - PRIMARY	1	KMEM
DD-72-1300	>	FIRE RES WATER LEVEL - 1/4" NPT PRESS TRANS @ BOTTOM TANK	1	KMEM
DD-80-0110		SLIDE-OUT STEP @ DRIVER'S PUMP OPERATOR'S PANEL	1	KMEM
DE-00-1060	>	**** HEADER, MM LADDERS, WATER TANK	1	KMEM
		WATER TANKS/OPTIONS AERIALS	**1**	**KMEM**
DE-05-1700	>	UPF POLYIIE TANK, 300 GAL. - AERIAL	1	KMEM
DE-05-6000		TANK DESCRIPT, CONSTR AND MOUNT, UPF POLY IIE TANK	1	KMEM
JA-00-0100		BODY AND COMPARTMENT HEADER (ALL AERIAL DEVICES)	1	KMEM
JA-00-5040		GENERAL BODY DESCRIPTION, MID-MOUNT, 100' LADDERS	1	KMEM
TF-08-0800	>	ANY MID-MOUNT, TURNTABLE COMPTS, LH & RH SIDE, LOW BODY	1	KMEM
TF-08-2000	>	COMPARTMENTATION, 100-4-HD-MM STYLE #1H-LO	1	KMEM
		****** HEADER, MM BODY OPTIONS (WITH PUMP)**	**1**	**KMEM**
TF-10-0100		BEVELED OVERLAPPING DOORS, ALL COMPARTMENTS, ALL DEVICES	1	KMEM
TF-10-1900		BRUSHED FINISHED DOOR PANS - 2" THICK DOORS	1	KMEM
TF-10-2700		DOOR HINGE FOR BEVELED OVERLAPPING HINGED DOORS	1	KMEM
TF-10-2800		DOOR SEAL FOR BEVELED OVERLAPPING HINGED DOORS	1	KMEM
TF-10-2940		ROTARY LATCHES WITH D-RING HANDLES	1	KMEM
TF-10-3150		GAS SHOCK ON HORIZONTALLY & VERTICALLY HINGED DOORS	1	KMEM
TF-10-6000		COMPARTMENT FLOORS (AERIALS ONLY)	1	KMEM
TF-11-0500		COMPARTMENT GENERAL DESCRIPTION, ALL LADDERS & PLATFORMS	1	KMEM
TF-11-1460		PAINTED REAR BODY PANEL, MID-MOUNTS	1	KMEM
TF-11-2285		1/2 WIDTH S. S. OUTRIGGER COVER PANELS, FOUR RIGGER DEVICES	1	KMEM

PART NO	S	DESCRIPTION	QTY	ID
TF-11-3000		BODY RUB RAILS, 1" X 1" EXTRUSION	1	KMEM
TF-12-1000		RUNNING BOARD STEPS (AERIALS ONLY)	1	KMEM
TF-13-3080		TURNTABLE BODY MODULE, MID MOUNT LADDERS	1	KMEM
TF-13-3200		MID-MOUNT, TURNTABLE LADDERS	1	KMEM
TF-13-5030		MID-MOUNT LADDER, BODY HANDRAILS, EXTRUDED ALUMINUM	1	KMEM
TF-14-1000		ALUMINUM WHEEL WELL LINERS	1	KMEM
TF-14-1740		POLISHED STAINLESS STEEL FENDERETTES,TANDEM AXLE BODIES	1	KMEM
TF-14-3010		SIX (6) SCBA BOTTLE STORAGE COMPARTMENTS, TANDEM BODIES	1	KMEM
TF-14-5000		REAR MUD FLAPS	1	KMEM
TF-14-6500		PAINTED REAR TOW EYES, THROUGH REAR SHEET	1	KMEM
TF-15-1150		HOSE BED, MID-MOUNT AERIALS	1	KMEM
TF-15-1900		ALUMINUM HOSE BED FLOORING - AERIAL	1	KMEM
TF-15-3110		HOSE BED COVER, VINYL WITH QTR TURNS	1	KMEM
TF-15-3190		HYPALON MATERIAL RED IN COLOR	1	KMEM
		****** HEADER, COMPARTMENT ACCESSORIES - MIDMOUNTS**	**1**	**KMEM**
TJ-05-1005		ADJUSTABLE SHELF DESCRIPTION - MIDMOUNT	1	KMEM
TJ-05-2000	>	(AUTO QTY) ADJUSTABLE SHELF(S), MOUNTED AS DIRECTED	8	KMEM
TJ-10-1005		250#, FLOOR MOUNTED, ROLLOUT TRAY DESCRIPTION - MIDMOUNT	1	KMEM
TJ-10-1105	>	(AUTO QTY) ROLLOUT TRAY(S), MOUNTED AS DIRECTED	4	KMEM
TJ-55-1010		SWING OUT TOOL BOARD, PAC TRAC DOUBLE FACED EXTRUSION - MIDMOUNT	1	KMEM
TJ-55-1200	>	(AUTO QTY) SWING OUT TOOL BOARD(S), MOUNTED AS DIRECTED	1	KMEM
		****** HEADER, MM WITH PUMP 120/240 VOLT AC ELEC & GEN**	**1**	**KMEM**
TL-03-0000		120/240 VOLT ELECTRICAL SYSTEM TESTING	1	KMEM
TL-09-0025		**** PICK GENERATOR LOCATION - MM WITH PUMP ****	1	KMEM
TL-15-1000		120 & 240 VOLT WIRING METHODS	1	KMEM
	>	**"NOTE" READ THIS BEFORE ADDING ANY ADDITIONAL GROUND LADDERS**	**1**	**KMEM**
		****** HEADER, 100-4-MM-HD GROUND LADDERS**	**1**	**KMEM**
TN-00-5065	>	CENTER LADDER STORAGE, 100-4-MM-HD	1	KMEM
TN-00-7030		HINGED PAINTED DOORS, LADDER STORAGE, MID-MOUNTS ONLY	1	KMEM
TN-01-0740		ALCO-LITE LADDER COMP, 100-4-MM-HD	1	KMEM
TN-02-1150		ALCO-LITE PEL-35 35' 2-SECTION EXTENSION LADDER (ALUM)	1	KMEM
TN-02-1170		ALCO-LITE PEL-24 24' 2-SECTION EXTENSION LADDER (ALUM)	1	KMEM
TN-02-2510		ALCO-LITE PRL-16 16' ROOF LADDER W/FOLDING HOOKS (ALUM)	2	KMEM
TN-02-7000		ALCO-LITE AEL-14 14' ATTIC EXTENSION LADDER (ALUM)	1	KMEM
TN-02-8010		ALCO-LITE FL-10 10' FOLDING ATTIC LADDER (ALUM)	1	KMEM
		****** HEADER, PIKE POLES & HOLDERS - AERIALS**	**1**	**KMEM**
TN-10-0500	>	PIKE POLE TUBE(S) - AERIALS	6	KMEM
TN-10-2030		FIRE HOOKS UNLIMITED PIKE POLES 2-6', 2-8', & 2-12' WITH FIB	1	KMEM
TN-20-0000		ADDITIONAL ITEMS SHIPPED WITH VEHICLE, ALL AERIAL DEVICES	1	KMEM
		****** HEADER, LOOSE EQUIPMENT - AERIAL**	**1**	**KMEM**
TN-35-1015		TWO (2) ZICO #SAC-44 FOLDING WHEEL CHOCKS, (2) MTD DRIVER SIDE	1	KMEM
		****** HEADER, 100' H.D. LADDER, MID-MOUNT 4-SECTION - 14**	**1**	**KMEM**
TQ-00-1600		100' H.D. LADDER, MID-MOUNT 4-SECT. GEN, INTENT & DESIGN STD - 14	1	KMEM
TQ-00-3005		MOUNTING OF AERIAL, MID-MOUNTS	1	KMEM
TQ-00-3460		HEIGHT AND REACH, 100' 4-SECT. HD MM LADDER - 14	1	KMEM
TQ-00-4000		MATERIAL STANDARDS, ALL DEVICES	1	KMEM
TQ-00-5065		100' H.D. LADDER, MID-MOUNT 4-SECT. HYDRAULIC SYSTEM	1	KMEM
TQ-00-5130		PARKER HOSE KIT - 4 JACK UNIT MID MOUNT	1	KMEM
TQ-00-6120		HYDRAULIC PUMP - PRESSURE COMPENSATED	1	KMEM
TQ-00-7030		HYDRAULIC RESERVOIR - MID MOUNT	1	KMEM
TQ-00-7070		HYDRAULIC OIL - REGULAR - A/W 46 - 120 GAL	1	KMEM
TQ-00-7115		DIVERTER VALVE, MID-MOUNT DEVICES	1	KMEM
TQ-00-7230		OUTRIGGER HYDRAULIC CONTROL VALVE - MM, PROPORTIONAL	1	KMEM
TQ-00-7450		ELECTRIC TURNTABLE HYDRAULIC CONTROL VALVE, MM LADDERS	1	KMEM
TQ-00-7505		HYDRAULIC SYSTEM FILTRATION	1	KMEM
TQ-00-8560		MID-MOUNT LADDER, "IQAN" MOTION CONTROL SYSTEM - ELECTRIC CONTROLS @ TT	1	KMEM
TQ-00-8700		HYDRAULIC PUMP PRESSURE - DISPLAY	1	KMEM
TQ-00-8710		ELEVATION ANGLE OF LADDER - DISPLAY	1	KMEM

PART NO	S	DESCRIPTION	QTY	ID
TQ-00-8715		VERTICAL HEIGHT OF LADDER - DISPLAY	1	KMEM
TQ-00-8725		DEGREE OF ROTATION FROM VEHICLE CENTERLINE - DISPLAY	1	KMEM
TQ-00-8730		E-ZONE CAB & BODY AVOIDANCE WARNING - DISPLAY	1	KMEM
TQ-00-8735		E-ZONE SHORT JACK WARNING - DISPLAY	1	KMEM
TQ-00-8740		CRADLE ALIGNMENT MESSAGE - DISPLAY	1	KMEM
TQ-00-8750		DEVICE LOAD MONITORING - DISPLAY	1	KMEM
TQ-00-8760		E-SPEED LADDER TIP SPEED CONTROL - DISPLAY	1	KMEM
TQ-00-8765		E-CUSH RAMP CONTROL FOR ELEVATION - DISPLAY	1	KMEM
TQ-00-8770		E-CUSH RAMP CONTROL FOR EXTENSION & RETRACTION - DISPLAY	1	KMEM
TQ-00-8890		WARNING MESSAGES - TURNTABLE ONLY	1	KMEM
TQ-00-9565		100'H.D. LADDER, MID-MOUNT 4-SECT. EMERG HYD. PUMP, EPU	1	KMEM
TQ-01-1000		HOT SHIFT PTO W/CONTROLS IN CAB	1	KMEM
TQ-01-1100		FAST IDLE CONTROL FOR ALL AERIAL DEVICES	1	KMEM
TQ-02-0235		100' H.D. LADDER, MID-MOUNT 4-SECTION TORQUE BOX	1	KMEM
TQ-02-1235		100' H.D. LADDER, MID-MOUNT 4-SECTION OUTRIGGERS	1	KMEM
TQ-02-1735		100' H.D. LADDER, MM 4-SECT OUTRIGGERS - HORIZONTAL CYLINDER	1	KMEM
TQ-02-1935		100' H.D. LADDER, MM 4-SECT OUTRIGGERS - VERTICAL CYLINDERS	1	KMEM
TQ-02-2100		IQAN - OUTRIGGER STRING POTENTIOMETER - TWO (2) OUTRIGGERS	1	KMEM
TQ-02-2200		OUTRIGGER/JACK FOOT PADS, FOUR (4) JACK DEVICES	1	KMEM
TQ-02-2350		AUXILARY JACK PADS, FOUR (4) 24" X 24" x 1" POLY	1	KMEM
TQ-02-2500		OUTRIGGER INTERLOCK SYSTEM & ALARM, ALL DEVICES	1	KMEM
		****** HEADER - OUTRIGGER LIGHTING, FOUR (4) OUTRIGGERS**	**1**	**KMEM**
TQ-02-5145		AKRON LED OUTRIGGER LAMPS, 4-OUTRIGGERS	1	KMEM
TQ-02-5225		LED OUTRIGGER GROUND LIGHTS - GROTE WHITELIGHT, 4-OUTRIGGERS	1	KMEM
TQ-02-5275		OUTRIGGER WARNING LIGHTS FROM LIGHT PACKAGE	1	KMEM
TQ-02-6005		OUTRIGGER WARNING LIGHT ACTIVATION, PRIMARY WARNING	1	KMEM
TQ-02-6800		OUTRIGGER SCOTCHLITE, WHITE	1	KMEM
TQ-02-7420		LADDER, MID-MOUNT TETHER OUTRIGGER CONTROLS	1	KMEM
TQ-02-8100		AUTO-LEVEL CONTROLS ON TETHER OUTRIGGER CONTROL	1	KMEM
TQ-02-9120		"AUTO-LEVEL" MID-MOUNTS ONLY	1	KMEM
TQ-02-9220		OUTRIGGER LEVELS MID-MOUNT DEVICES; TWO (2)	1	KMEM
TQ-03-1500		100' H.D. LADDER, MID-MOUNT 4-SECTION TURNTABLE	1	KMEM
TQ-03-3010		TURNTABLE DECK - ALUMINUM TREADPLATE	1	KMEM
TQ-04-1852		HEEL PIN STEP ON TURNTABLE, 79', 103', 109' & 123' & 100' M.M. LADDERS	1	KMEM
TQ-04-1860		TURNTABLE HANDRAILS, KNURLED ALUMINUM, MID-MOUNTS	1	KMEM
TQ-04-2135		HEEL PINS - 75' & 100' M.M. LADDER	1	KMEM
TQ-04-2300		STAINLESS STEEL CRADLE ALIGNMENT ARROWS ON TURNTABLE	1	KMEM
TQ-04-2810		SAFETY CHAINS BETWEEN TURNTABLE HANDRAIL, MID-MOUNTS	1	KMEM
TQ-04-7600		100' H.D. LADDER, MID-MOUNT 4-SECTION TURNTABLE SWIVEL	1	KMEM
TQ-04-9000		IQAN - SWIVEL ROTATION ENCODER	1	KMEM
TQ-06-0520		100' H.D. LADDER, MID-MOUNT 4-SECT, LADDER CONSTRUCTION	1	KMEM
TQ-06-1950		100' H.D. 4-SECTION MM, LADDER DIMENSIONS - 14	1	KMEM
TQ-06-3000		RUNG COVERS - PHOTOLUMINESCENT, ALL DEVICES	1	KMEM
TQ-06-4000		*** MUST UPGRADE TO DUAL STEPS - CREEPER CONTROLS SELECTED ***	1	KMEM
TQ-06-4015		DUAL FOLDING STEPS @ LADDER TIP, ALL DEVICES	1	KMEM
TQ-06-4100		RED SCOTCHLITE MATERIAL ON LAST 6' OF LADDER TIP	1	KMEM
TQ-06-4200		4' FIRE HOOKS UNLIMITED PIKE POLE MOUNTED IN FLY SECTION OF LADDER	1	KMEM
TQ-06-4240	>	PIKE POLE MOUNTED ON LEFT SIDE OF FLY SECTION	1	KMEM
TQ-06-4250		6 LB. PICKHEAD AXE MOUNTED IN FLY SECTION, INCLUDES AXE	1	KMEM
TQ-06-4260	>	AXE MOUNTED ON LEFT SIDE OF FLY SECTION	1	KMEM
TQ-06-6500		RESCUE EYELET ON LAST RUNG OF LADDER TIP	1	KMEM
TQ-06-9000		AERIAL TRAVEL SUPPORT, ALL DEVICES	1	KMEM
TQ-06-9020		CRADLE ILLUMINATION LIGHTS - HALOGEN LIGHTS	1	KMEM
TQ-07-1600		100' H.D. LADDER, MID-MOUNT 4-SECT, ELEVATION SYSTEM - 14	1	KMEM
TQ-07-2800		IQAN - INCLINOMETER	1	KMEM
TQ-07-2801		IQAN - MOMENT LOAD INDICATOR	1	KMEM
TQ-07-2805		IQAN - E-CUSH CONTROL, ELEVATION SYSTEM - LADDER	1	KMEM
TQ-08-1600		100' H.D. LADDER, MID-MOUNT 4-SECT, ROTATION SYSTEM - 14	1	KMEM
TQ-08-2800		ROTATION MOTOR AND BRAKE - 41" EXTERNAL BEARINGS	1	KMEM

PART NO	S	DESCRIPTION	QTY	ID
TQ-08-2950		SWING DRIVE ADJUSTMENT	1	KMEM
TQ-08-3000		IQAN - "E-SPEED" SAFETY SYSTEM, LADDERS	1	KMEM
TQ-08-3100		IQAN - "E-ZONE" ROTATION SAFETY SYSTEM, 2-OUTRIGGERS	1	KMEM
TQ-08-3650		IQAN - "E-ZONE" CAB & BODY PROXIMITY SYSTEM - LADDERS	1	KMEM
TQ-09-1600		100' H.D. LADDER, MID-MOUNT 4-SECT, EXTENSION/RETRACTION SYSTEM - 14	1	KMEM
TQ-09-2350		EXTENSION CYLINDERS PAINTED LADDER PAINT COLOR	1	KMEM
TQ-09-2800		IQAN - EXTENSION SYSTEM STRING POTENTIOMETER	1	KMEM
TQ-09-2810		IQAN - "E-CUSH" EXTENSION/RETRACTION SYSTEM - LADDERS	1	KMEM
TQ-09-3048		LADDER SLIDE PADS, 100' & 101' LADDER	1	KMEM
		LADDER EXTENSION NUMBERS, ALL DEVICES	**1**	**KMEM**
TQ-09-3150		LADDER LEVEL INDICATOR (BASE SECTION) - LIGHTED	1	KMEM
TQ-09-3220		LADDER, CABLE/HOSE/WIRE ROUTING, 4-SECTIONS	1	KMEM
		****** HEADER - LADDER, 120 VOLT ELECTRICAL SYSTEM & ACCESSORIES**	**1**	**KMEM**
TQ-10-0100		LADDER, 120 VOLT ELECTRICAL SYSTEM	1	KMEM
TQ-10-0125		DELETE LADDER TIP RECEPTACLE	1	KMEM
		****** HEADER - LADDER, 12 VOLT ELECTRICAL SYSTEM & ACCESSORIES**	**1**	**KMEM**
TQ-10-1018		HEEL PIN STEP LIGHTS - TECNIQ EON 3 LED LIGHTS	1	KMEM
TQ-10-1040		TURNTABLE CONTROL CONSOLE LIGHTING - LUMA BAR LED H2O	1	KMEM
TQ-10-1060		TURNTABLE CONSOLE STEP LIGHT - TECNIQ EON 3 LED	1	KMEM
TQ-10-1115		TWO (2) UNITY LED SPOTS @ LADDER BASE SECTION	1	KMEM
TQ-10-1242		TWO (2) UNITY LED SPOT LIGHTS @ LADDER TIP	1	KMEM
TQ-10-2805		LADDER WALKWAY ILLUMINATION LIGHTS, 4-SECT LADDER	1	KMEM
TQ-10-2850		RED - LADDER ILLUMINATION LIGHTS	1	KMEM
TQ-12-0010		LADDER, CONTROL STATION	1	KMEM
TQ-12-0040		MM LADDERS, CONSOLE LOCATED @ LH SIDE OF TURNTABLE, STD	1	KMEM
TQ-12-0085		PAINTED ALUMINUM TURNTABLE CONSOLE - MATCH LADDER COLOR	1	KMEM
TQ-12-1700		100' H.D. LADDER, MID-MT. 4-SECT. TURNTABLE CONTROL STATION	1	KMEM
TQ-12-2525		FIRE RESEARCH INSIGHT ULTIMATE @ TURNTABLE CONSOLE	1	KMEM
TQ-12-2595		TURNTABLE CONSOLE COVER - PAINTED RADIUS	1	KMEM
TQ-12-3000		IQAN - "CREEPER CONTROLS" @ LADDER TIP	1	KMEM
TQ-14-1210		LADDER, FIRE RESEARCH ACT 3-WAY COMMUNICATION SYSTEM - LOWER CONTROL	1	KMEM
TQ-14-1215		LADDER, FIRE RESEARCH ACT 3-WAY COMMUNICATION SYSTEM - UPPER SPEAKER/MIC	1	KMEM
TQ-18-0650		100' H.D. LADDER, M-M, 4-SECTION LADDER WATERWAY - 14	1	KMEM
TQ-18-1050		100' H.D. 4-SECTION LADDER, LADDER WATERWAY	1	KMEM
TQ-18-2520		4" HEEL PIN SWIVEL - 100'	1	KMEM
TQ-18-2600		AUTOMATIC WATER DRAIN/VENT	1	KMEM
TQ-18-3000		ALL DEVICES, WATERWAY RELIEF VALVE	1	KMEM
TQ-18-3020		MID-MOUNT AERIAL WATERWAY DRAIN, 1 1/2" VALVE	1	KMEM
TQ-18-4130	>	LADDER, AKRON #3480 "STREAMMASTER II" MONITOR	1	KMEM
TQ-18-4210	>	LADDER, AKRON #5178 NOZZLE	1	KMEM
TQ-18-4300		LADDER, AKRON MONITOR CONTROLS W/ AUTO STOW	1	KMEM
TQ-18-4505		LADDER, ELECTRIC SELECTABLE WATERWAY TROLLEY - NEW	1	KMEM
TQ-18-4615		LADDER, AKRON 3499 TRIPLE STACKED TIPS (PYROLITE)	1	KMEM
TQ-18-4617	>	LADDER, AKRON 3485 STREAM SHAPER - 3 1/2"	1	KMEM
		LADDER MANUAL TFT VALVE UNDER MONITOR	**1**	**KMEM**
TQ-18-4775		2.5" NH MALE THREAD - C1- VALVE UNDER MONITOR	1	KMEM
TQ-18-4795		2-1/2" x 1-1/2" REDUCER WITH CAP, FOR V ALVE UNDER MONITOR DISCHARGES	1	KMEM
TQ-18-4950		"STORE FRONT BLITZ" DESCRIPTION	1	KMEM
TQ-20-1600		100' H.D. LADDER, MID-MOUNT 4-SECTION LADDER CAPACITIES - 14	1	KMEM
TQ-50-0100		FIRE DEPT AERIAL FAMILIARIZATION - PROVIDED BY FACTORY	1	KMEM
TQ-50-0140		FACTORY FAMILIARIZATION - FOUR (4) DAYS	1	KMEM
TQ-50-0600		AERIAL SERVICE, ALL DEVICES	1	KMEM
TQ-50-0700		WARNING DECALS, ALL DEVICES	1	KMEM
TQ-52-0100		AERIAL LADDER, MANUALS, TWO (2) SETS	1	KMEM
TQ-70-1600		100' H.D. LADDER MID-MOUNT, 4-SECTION CERT. & TESTING	1	KMEM
		****** HEADER - PAINT SECTION - ALL UNITS ******	**1**	**KMEM**

PART NO	S	DESCRIPTION	QTY	ID
UA-00-1100		GENERAL PAINT DESCRIPTION - ALL	1	KMEM
UA-00-1200		GENERAL PRIMER & PREP DESCRIPTION - LADDER/PLATFORM	1	KMEM
UA-00-1400		GENERAL FINISH PAINT DESCRIPTION - LADDER/PLATFORM	1	KMEM
UA-00-2700		BODY BUFFING & FINISH - LADDER/PLATFORM	1	KMEM
		****** HEADER - LADDER/PLATFORM BODY PAINT ******	**1**	**KMEM**
UA-03-0200		INSIDE/UNDERSIDE BODY PAINTED JOB COLOR - LADDER/PLATFORM	1	KMEM
UA-03-0400		CMPT INT W/ MULTISPEC, WHITE MARBLE STONE - LADDER/PLATFORM	1	KMEM
UA-03-0900		SINGLE COLOR BODY PAINT SCHEME - LADDER/PLATFORM	1	KMEM
UA-03-2200		PUMPHOUSE & PLUMBING PAINTED JOB COLOR - LADDER/PLATFORM	1	KMEM
		****** HEADER - TANDEM AXLE CUSTOM CHASSIS PAINT (AERIAL)**	**1**	**KMEM**
UA-05-0050		CUSTOM CAB PRIMER & PREP	1	KMEM
UA-05-0070		CUSTOM FINISH PAINT & PREP	1	KMEM
UA-05-0200		TWO TONE CUSTOM CAB PAINT SCHEME	1	KMEM
UA-05-0350		CUSTOM CAB BUFFING & FINISH	1	KMEM
UA-05-0360		CUSTOM CAB INTERIOR PAINT - TEXTURED GRAY	1	KMEM
UA-05-0405		CUSTOM CHASSIS JOB COLOR FRAME RAILS	1	KMEM
UA-05-0505		CUSTOM CHASSIS WHEEL AND HUB PAINT - TANDEM AXLE	1	KMEM
UA-06-0200		LADDER, PAINTING, ALL DEVICES, WHITE #91528	1	KMEM
UA-06-0450		EXTENSION CYLINDERS PAINTED TO MATCH LADDER COLOR	1	KMEM
UA-06-0900		TORQUEBOX PAINT - JOB COLOR	1	KMEM
UA-06-1100		OUTRIGER PAINT - SILVER URETHABOND 104	1	KMEM
UA-06-1205		TURNTABLE PAINT - LADDER COLOR	1	KMEM
UA-06-1215		TURNTABLE CONSOLE PAINT - LADDER COLOR	1	KMEM
UA-06-1225		LIFT CYLINDERS CONSOLE PAINT - LADDER COLOR	1	KMEM
UA-06-1500		LADDER RUST INHIBITOR - ALL DEVICES	1	KMEM
UA-06-2120	>	PAINT CODES, TWO-TONE COLORS, FILL IN BLANKS	1	KMEM
UA-06-2130		PAINT CODES, AERIAL DEVICE - WHITE #91528	1	KMEM
UA-06-2200		PINT OF TOUCH-UP PAINT	1	KMEM
UA-06-2510		FINALIZATION & DETAILING - LADDER/PLATFORM	1	KMEM
UA-06-2850		RUSTPROOFING WARRANTY, TEN (10) YEAR	1	KMEM
		****** HEADER, LETTERING & STRIPING - 79-SA-RM**	**1**	**KMEM**
UA-12-0100		COMPUTER GENERATED LETTERING	1	KMEM
UA-12-1220		GOLDLEAF W/ DUAL DROP SHADOW LETTERING ON FRONT CAB DOORS	1	KMEM
UA-12-1245		3" LETTERING ON FRONT CAB DOORS	1	KMEM
UA-12-1760		GOLDLEAF W/ DUAL DROP SHADOW LETTERING ON CREW CAB DOORS	1	KMEM
UA-12-1785		3" LETTERING ON CREW CAB DOORS	1	KMEM
UA-12-2720		GOLDLEAF W/ DUAL DROP SHADOW LETTERING ON FRONT OF CAB	1	KMEM
UA-12-2745		3" LETTERING ON FRONT OF CAB	1	KMEM
UA-12-3120		GOLDLEAF W/ DUAL DROP SHADOW LETTERING ON CAB SIDE PANEL	1	KMEM
UA-12-3145		3" LETTERING ON CAB SIDE PANEL	1	KMEM
UA-13-0100		LETTERING FONT - BASIC BLOCK TYPE FONT	1	KMEM
UA-14-1310		LARGE CUSTOM FIRE DEPARTMENT LOGO	1	KMEM
UA-14-1320		SCOTCH-LITE W/ TWO COLORS - LARGE LOGO	1	KMEM
UA-14-1335	>	LOCATION - LARGE CUSTOM LOGO	1	KMEM
UA-16-1000		ACCENT STRIPING & SCROLL OPTIONS	1	KMEM
UA-16-1200		1/2" ACCENT STRIPE ON BODY UPPER & LOWER AREAS OF BODY	1	KMEM
UA-16-1210		GOLD LEAF ACCENT MATERIAL - UPPER & LOWER AREAS OF BODY	1	KMEM
UA-16-1500		1/2" ACCENT STRIPE ON CAB PAINT BREAK LINE	1	KMEM
UA-16-1510		GOLD LEAF ACCENT MATERIAL - CAB PAINT BREAK LINE	1	KMEM
UA-20-0100		19" X 144" LETTERING PANELS ON BASE SECTION	1	KMEM
UA-20-0200		SIGN PANELS TO PAINTED TO MATCH AERIAL DEVICE COLOR	1	KMEM
UA-20-0525		SCOTCH-LITE W/ DUAL DROP SHADOW LETTERING FOR AERIAL	1	KMEM
UA-50-0100		NFPA REQUIRED SCOTCH-LITE STRIPING - SA AERIAL	1	KMEM
UA-50-0120		8" SCOTCH-LITE STRIPE ON CAB AND BODY - SA AERIAL	1	KMEM
UA-58-5100		WHITE SCOTCH-LITE	1	KMEM
UA-80-6000		REAR CHEVRON STRIPING	1	KMEM
UA-80-6002		50% VERTICAL SURFACE	1	KMEM
UA-80-6030		6" REAR SCOTCH-LITE CHEVRON STRIPING	1	KMEM
UA-80-6070		RUBY RED & LEMON YELLOW SCOTCH-LITE	1	KMEM
		****** PROPOSED - AERIAL WARRANTY PKG, W/PUMP @ REAR OF SPEC**	**1**	**KMEM**

PART NO	S		DESCRIPTION	QTY	ID
W6-00-000J			PROPOSED - KME WARRANTY, STARTING ON DELIVERY DATE	1	KMEM
W6-00-0010	X	<	PROPOSED - 5 YEAR FCAM WARRANTY - CUSTOM CHASSIS	1	
			$16,500 per email Phil to BB 9/27/16		
W6-00-003M		>	PROPOSED - 5 YEAR WARRANTY - BASE WITH CUSTOM CHASSIS	1	KMEM
W6-00-0150			PROPOSED - 5 YEAR CUMMINS BASE WARRANTY	1	KMEM
W6-00-0210			PROPOSED - 5 YEAR ALLISON EVS TRANSMISSION WARRANTY	1	KMEM
W6-00-0220			PROPOSED - 3 YEAR COOLING SYSTEM WARRANTY - CUSTOM	1	KMEM
W6-00-0230			PROPOSED - LIFETIME FRAMERAIL WARRANTY	1	KMEM
W6-00-0242			PROPOSED - SHEPPARD STEERING GEAR STANDARD - THREE YEAR WARRANTY	1	KMEM
W6-00-0254			PROPOSED - 5 YEAR MERITOR FRONT AXLE - WARRANTY	1	KMEM
W6-00-0266			PROPOSED - 5 YEAR MERITOR 180 SERIES TANDEM AXLE REAR - WARRANTY	1	KMEM
W6-00-0270			PROPOSED - 3 YEAR MERITOR ABS - WARRANTY	1	KMEM
W6-00-0320		>	PROPOSED - 10 YEAR CAB STRUCTURAL WARRANTY	1	KMEM
W6-00-0330			PROPOSED - 10 YEAR BODY STRUCTURAL WARRANTY	1	KMEM
W6-00-0390			PROPOSED - 10 YEAR CAB & BODY CORROSION WARRANTY	1	KMEM
W6-00-0450			PROPOSED - PAINT FINISH WARRANTY, TEN (10) YEAR	1	KMEM
W6-00-0470			PROPOSED - 5 YEAR LETTERING WARRANTY	1	KMEM
W6-00-0483			PROPOSED - 1 YEAR BRIGHTWORK WARRANTY	1	KMEM
W6-00-0490			PROPOSED - 10 YEAR STAINLESS STEEL PIPING WARRANTY	1	KMEM
W6-00-0535			PROPOSED - REAR SUSPENSION - HENDRICKSOON AIR RIDE - TANDEM AXLE -THREE YEAR WA	1	KMEM
W6-00-0570			PROPOSED - SAFEGUARD TECHNOLOGY - 10 YEAR - RUNG COVERS	1	KMEM
W6-00-0590			PROPOSED - 20 YEAR AERIAL LADDER WARRANTY	1	KMEM
W6-00-0630		>	PROPOSED - FIVE (5) YEAR AERIAL WATERWAY SWIVEL WARRANTY - AMITY	1	KMEM
W6-00-0650		>	PROPOSED - TEN 10 YEAR AERIAL WATERWAY WARRANTY - AMITY	1	KMEM
W6-00-0710			PROPOSED - LIFETIME POLY TANK WARRANTY - ALL TANKS	1	KMEM
W6-00-0820			PROPOSED - WATEROUS 5 YEAR PUMP WARRANTY (PARTS & LABOR)	1	KMEM
W6-00-0823	X		WATEROUS FCAM 5YR WARRANTY CORRECTION	1	
W6-00-1153	S		DEALER PROVIDES WARRANTY TRANSPORT PROP and REQ	1	DLR
W6-00-1330			PROPOSED - AKRON - 5 YEAR LIMITED WARRANTY	1	KMEM
W6-00-1340			PROPOSED - AKRON HEAVY DUTY VALVE - 10 YEAR WARRANTY	1	KMEM
W6-00-1530			PROPOSED - USSC SEATING 6 YEAR WARRANTY	1	KMEM
WA-00-0010			"AERIAL FIRE APPARATUS" NFPA 2016 STATEMENT OF EXCEPTIONS	1	KMEM

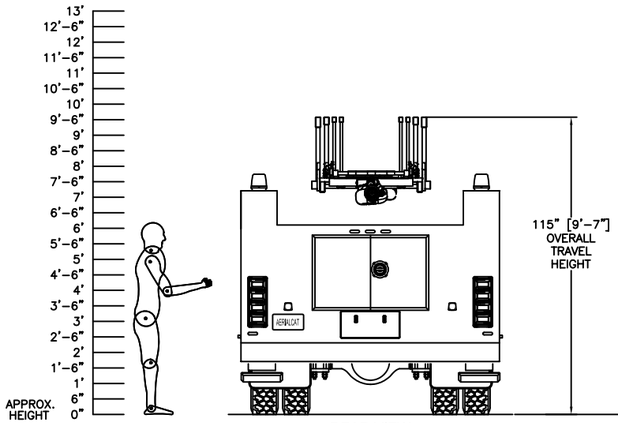

REAR VIEW

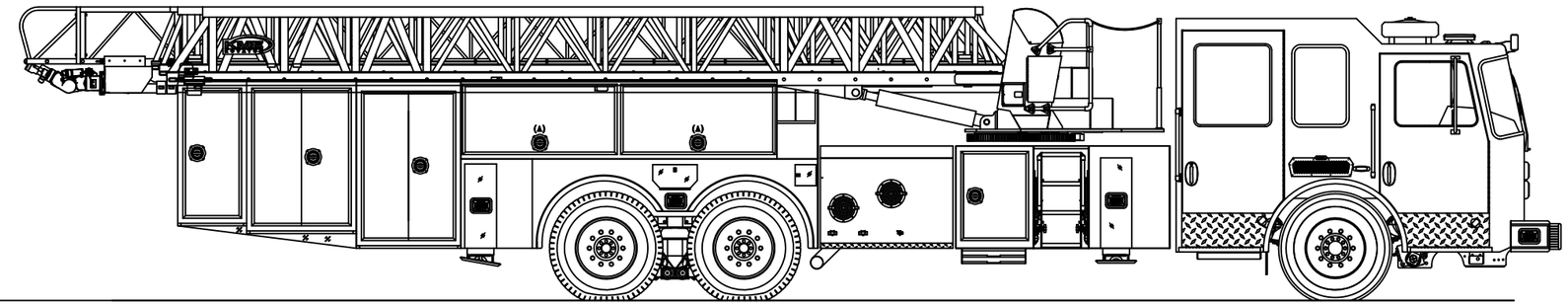

OFFICERS SIDE VIEW

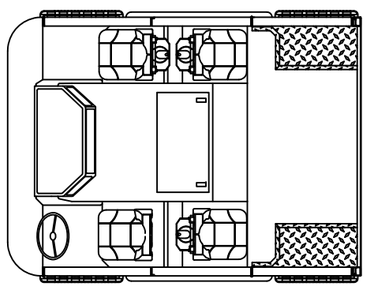

CAB INTERIOR LAYOUT

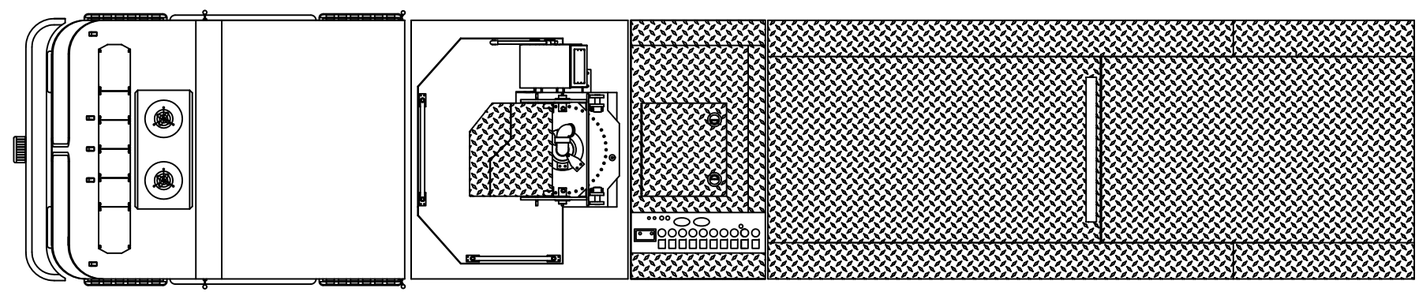

TOP VIEW

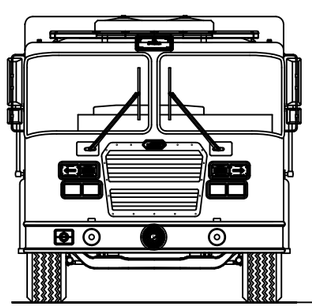

FRONT VIEW

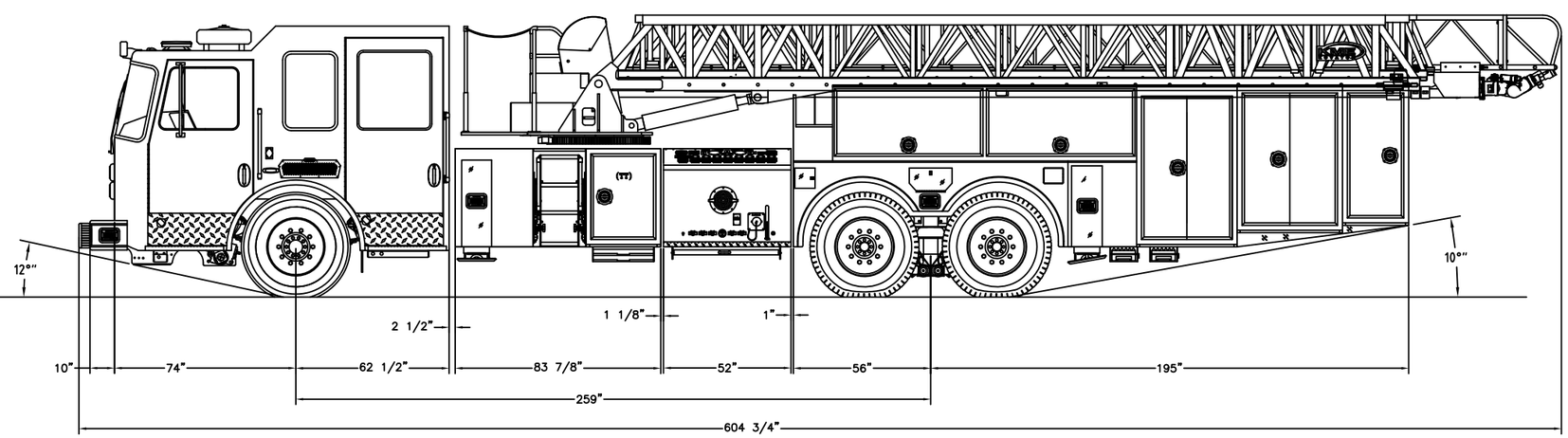

DRIVERS SIDE VIEW

CAB: 100"W PREDATOR MFD 10" RAISED ROOF
ENGINE & TRANS. CUMMINS ISX15 500 HP/ 4000 EVS
AXLES: 23,000# FRONT/58,000# REAR
PUMP: WATEROUS S100 2,000 GPM SINGLE STAGE
WATER TANK: 300 GALLONS

THIS DRAWING IS A GENERAL CONFIGURATION AND MAY NOT NECESSARILY REFLECT ALL CONTRACTUAL REQUIREMENTS. CONTRACT SPECIFICATIONS SHALL PREVAIL OVER DRAWING.

CUSTOMER APPROVAL:

NAME:

TITLE:

DATE:

SYM	DATE	REVISION DESCRIPTION	APP'D

SALES ENGINEER : TBD

DIMENSIONS ARE APPROXIMATE & MAY VARY DUE TO BUILD ADJUSTMENTS

SCALE	DWG SIZE	DRAWN BY	Z.ZSCHUNKE	DATE
NONE	B	APPROVED BY	P.HOHERCHAK	10-3-16

100' MID-MOUNT LADDER

MAPC 9 HIGH END

PROPOSAL DRAWING

KME
ONE INDUSTRIAL COMPLEX - NESQUEHONING, PA 18240

KME

HIGH END FCAM 100 FOOT

TRACTOR DRAWN AERIAL

LADDER

“QUINT”

MAPC 10

Quote SO

MAPC/FCAM

MAPC 10 HIGH END 101' TRACTOR DRAWN AERIAL

Sales Rep:

Terms:

Drawing #:
Est. Delivery Date: / /
Customer PO #:
Customer #:
QPF #:

Penalty:

Quote No: 10505-0011
10/04/2016

PART NO	S	DESCRIPTION	QTY	ID
		== TRACTOR DRAWN AERIALCAT (TDA) - 713.016 07/13/16 ==	**1**	**KMEM**
		== LETTERING & STRIPING, 100' TDA - 713.016 07/13/16 ==	**1**	**KMEM**
		== COMPARTMENT ACCESSORIES TDA - 713.016 07/13/16 ==	**1**	**KMEM**
		== TDA WITH PUMP GEN/ELEC AC - 713.016 07/13/16 ==	**1**	**KMEM**
		== MISC AND LOOSE EQUIPMENT (AERIAL) - 713.016 07/13/16 ==	**1**	**KMEM**
		== AERIAL WARRANTY PACKAGE W/PUMP - 713.016 07/13/16 ==	**1**	**KMEM**
		DEALER ======= DEALER ======= DEALER	**1**	**DLR**
		QUOTE DATA VERSION: 0713.016 - 2016 DATA SET	**1**	**KMEM**
		INDEX OF PART NUMBERS	**1**	**KMEM**
		****** HEADER - CONTRACTS, PROPOSAL FORM, ETC @ FRONT OF SPECS**	**1**	**KMEM**
		****** PROPOSED - AERIAL SPEC BOILERPLATE**	**1**	**KMEM**
04-00-0000		PROPOSED - GENERAL INFORMATION - NFPA 1901	1	KMEM
04-00-0033		PROPOSED - COMPLETION INFO	1	KMEM
04-00-0040		PROPOSED - FMVSS CERTIFICATION	1	KMEM
04-00-0060		PROPOSED - RECORDS	1	KMEM
04-00-0075		PROPOSED - TOP OF THE LINE CHASSIS MULTIPLEX	1	KMEM
04-00-0107		PROPOSED - GENERAL CONSTRUCTION - AERIAL	1	KMEM
04-00-0120		PROPOSED - SINGLE LINE RESPONSIBILITY	1	KMEM
04-00-0130		PROPOSED - PRODUCT LIABILITY - $30,000,000.00	1	KMEM
04-00-0170		PROPOSED - CRITERIA & CODE CONFORMANCE - AERIAL	1	KMEM
04-00-0193		PROPOSED - PAINT PERFORMANCE CERTIFICATION	1	KMEM
04-00-0490		PROPOSED - PRICES & PAYMENTS	1	KMEM
04-00-0540		PROPOSED - BOND REQUIREMENTS	1	KMEM
04-00-0560		PROPOSED - PERFORMANCE BOND	1	KMEM
04-00-0580		PROPOSED - NON-COLLUSION AGREEMENT	1	KMEM
04-00-0630		PROPOSED - MATERIAL & WORKMANSHIP	1	KMEM
04-00-0660		PROPOSED - CONTRACT SPECIALIST	1	KMEM
04-00-0680		PROPOSED - APPROVAL DRAWING	1	KMEM
04-00-1200		PROPOSED - DELIVERY	1	KMEM
04-00-1215		PROPOSED - INSTRUCTION MANUALS, TWO (2) SETS - CD	1	KMEM
04-00-1215	**X**	POWERPOINT DELIVERY - PROPOSAL FCAM AERIAL	1	
04-00-1300		PROPOSED - VEHICLE FLUIDS PLATE	1	KMEM
04-00-1500		PROPOSED - MANUFACTURE GENERATED EXACT BLUEPRINT WITH BID	1	KMEM

PART NO	S	DESCRIPTION	QTY	ID
04-00-1521	X	PROPOSED - KME and BULLDOG FAMA MEMBERSHIP	1	
04-00-1540		PROPOSED - MANUFACTURED IN THE UNITED STATES	1	KMEM
04-00-1550		PROPOSED - ISO 9001 QUALITY MANAGEMENT SYSTEM	1	KMEM
04-00-1570		PROPOSED - NFPA TREAD PLATE CERTIFICATION	1	KMEM
04-00-1605		PROPOSED - AMP DRAW REPORT	1	KMEM
04-00-2440		PROPOSED - UNDERWRITERS LABORATORIES (UL) TESTING - AERIAL	1	KMEM
07-00-0015		"AERIAL FIRE APPARATUS" NFPA 2016 CHAPTERS OF COMPLIANCE	1	KMEM
08-00-0000		VEHICLE DATA PLATE DESCRIPTION	1	KMEM
14-00-0000		NFPA ROLLOVER STABILITY GENERAL STATEMENT	1	KMEM
15-00-0010	>	PROPOSED - PRINCIPAL APPARATUS DIMENSIONS & GVWR	1	KMEM
15-00-0050		!!! CRITICAL OVERALL HEIGHT REQUIREMENT !!! - "NO"	1	KMEM
15-00-0150		!!! CRITICAL OVERALL LENGTH REQUIREMENT !!! - "NO"	1	KMEM
AA-00-002A		SERVICE CENTER - PROPOSAL FCAM	1	DLR
BA-00-0355		TILLERS	1	KMEM
BA-00-3000		SEAT AND SEAT BELT ANCHOR TESTING	1	KMEM
BA-01-2010		<1> 101' TILLER WITH PUMP	1	KMEM
BA-01-2105		<2> CHASSIS, SINGLE AXLE TILLER	1	KMEM
BA-02-0815		<3> TDA PREDATOR - SINGLE AXLE	1	KMEM
		****** HEADER - 100" PREDATOR CAB ******	**1**	**KMEM**
BA-04-0805		PREDATOR CAB - BASE, 100"	1	KMEM
BA-04-0850		PREDATOR CAB - BASE - ALUMINUM CONSTRUCTION	1	KMEM
BA-04-0990		PREDATOR 100" - CRASH TESTING	1	KMEM
BA-04-0995		PREDATOR 100" - 120,000# ROOF & SIDE TESTING	1	KMEM
BA-04-1300		PREDATOR 100" - MFD CAB LENGTH (DIM - 62 1/2")	1	KMEM
BA-04-1800		PREDATOR 100" - DIMENSIONS FRONT SEATING & ENGINE ENCLOSURE - WIDE	1	KMEM
BA-04-4000		10" RAISED ROOF - 100" PREDATOR	1	KMEM
BA-04-5000		CAB ROOF DRIP RAIL 100" PREDATOR/PANTHER	1	KMEM
BA-05-0260		BATTERY ACCESS DOORS - REAR STEP WELLS, EACH SIDE	1	KMEM
BA-05-0610		BARRIER HEIGHT CAB DOORS, 100" PREDATOR "MFD, LFD & X-LFD"	1	KMEM
BA-05-0650		CAST ANTI-SLIP ENTRY STEPS FOR REDUCED LENGTH CAB DOORS	1	KMEM
BA-05-0700		CAB DOORS - BOLT ON WEATHER STRIP	1	KMEM
BA-05-1015		PREDATOR DOOR LATCHES, HD LOOP STYLE LATCH - BARRIER HEIGHT DOORS	1	KMEM
BA-05-1035		LOCKING CAB DOOR , OUT + IN, LOOP STYLE LATCH	1	KMEM
BA-05-1037		KEY MODEL #2001	1	KMEM
BA-05-1120		ELECTRIC WINDOWS, FOUR (4) DOORS, MFD, X-MFD, LFD CAB	1	KMEM
BA-05-1130		DOOR WINDOW TRIM EXTRUSION, 4 - DOOR	1	KMEM
BA-05-1325		FULL HEIGHT INTERIOR DOOR PANELS - BRUSH ALUM, 4 - DOOR	1	KMEM
BA-05-1510		SCOTCHLITE MATERIAL ON INTERIOR OF DOOR PANEL 4-DOORS	1	KMEM
		****** HEADER - CAB EXTERIOR ACCESSORIES & OPT, 100" PREDATOR**	**1**	**KMEM**
BA-05-2410		WINDSHIELD, 100" PREDATOR CAB	1	KMEM
BA-05-2425		WINDSHIELD WIPERS & WASHERS - 100" PREDATOR	1	KMEM
BA-05-2450		SIDE VIEWING WINDOWS NON-SLIDING - PREDATOR	1	KMEM
BA-05-2500		DARK TINT WINDOWS, SIDE VIEWING, REAR DOORS & REAR WALL	1	KMEM
BA-05-2600		GRAB RAILS EXTERIOR, KNURLED ALUMINUM EXTRUSION	1	KMEM
BA-05-2668		PREDATOR INTERIOR GRAB HANDLES - WHEELABRATED	1	KMEM
BA-05-2692		INTERIOR "A" POST GRAB HANDLE "PREDATOR" - WHEELABRATED	1	KMEM
BA-05-2715		FRONT CAB GRILLE - FORMED STAINESS STEEL MIRROR FINISHED - 100" PREDATOR	1	KMEM
BA-05-2780		FRONT CAB GRILLE SCREEN - BLACK MESH - 100" PREDATOR/PANTHER	1	KMEM
BA-05-2815		SIDE CAB GRILLES - SHAPED BRIGHT FINISHED - 100" PREDATOR	1	KMEM
BA-05-2880		SIDE CAB GRILLE SCREEN - BLACK MESH - PREDATOR/PANTHER	1	KMEM
BA-05-2900		ALUMINUM CAB WHEEL LINERS	1	KMEM
BA-05-2915		STAINLESS STEEL CAB FENDERETTES	1	KMEM
BA-05-3000		FRONT MUD FLAPS	1	KMEM
BA-05-3500		VELVAC MIRRORS " WEST COAST" HEATED / REMOTE - W/CONVEX SPOT	1	KMEM
BA-05-3690		MIRROR CONTROL IN MULTIPLEX CONTROL SCREEN	1	KMEM
BA-05-5115		INTERIOR TRIM, 100" PREDATOR	1	KMEM
BA-05-5180		CUSTOM CAB INTERIOR PAINT - TEXTURED GRAY	1	KMEM

PART NO	S	DESCRIPTION	QTY	ID
BA-05-5200		PREDATOR REAR INTERIOR CAB WALL, GRAY DURAWEAR UPHOLSTERY	1	KMEM
BA-05-5335		TREAD PLATE KICK PLATE ON LOWER INTERIOR REAR WALL	1	KMEM
BA-05-5530	>	STORAGE COMPARTMENTS UNDER FRONT SEATS - 100" PREDATOR	1	KMEM
BA-05-5610		BARYFOL FLOORING	1	KMEM
BA-05-5650		1" ACOUSTICAL INSULATION	1	KMEM
BA-05-5820		ENGINE ENCLOSURE 100" PREDATOR (ABS VINYL)	1	KMEM
BA-05-5860		ENGINE ENCLOSURE MATERIAL - ALUMINUM CAB	1	KMEM
BA-05-7040		SUN VISORS, 100" PREDATOR CAB, PADDED VINYL	1	KMEM
BA-06-0500	>	TOP ROLLOVER PROTECTION SYSTEM W/SLAVE SENSOR - FIVE (5) OR MORE SEATS	1	KMEM
		****** HEADER - CAB SEATING & ACCESSORIES, 100" - PREDATOR MFD**	**1**	**KMEM**
		****** SEATING OPTIONS USSC, 100" - PREDATOR - MFD - ROLLTEK**	**1**	**KMEM**
BA-06-329J		DRIVERS SEAT, USSC AIR SUSPENSION, ABTS - SIDE CURTAIN AIRBAG	1	KMEM
BA-06-389N		OFFICERS SEAT, USSC - FIXED BASE, SCBA, ABTS - SIDE CURTAIN AIRBAG	1	KMEM
BA-06-3910		ZICO ULLH SCBA BOTTLE BRACKET - OFFICER'S SEAT	1	KMEM
		MFD CAB - REAR FACING USSC SEATS - ROLLTEK	**1**	**KMEM**
BA-06-414M		USSC SCBA ABTS REAR FACING, OUTBOARD, DS - SIDE CURTAIN AIRBAG	1	KMEM
BA-06-4180		ZICO ULLH SCBA BOTTLE BRACKET - OUTBOARD, DS	1	KMEM
BA-06-424M		USSC SCBA ABTS REAR FACING,OUTBOARD, OS - SIDE CURTAIN AIRBAG	1	KMEM
BA-06-4280		ZICO ULLH SCBA BOTTLE BRACKET - OUTBOARD, OS	1	KMEM
		MFD CAB - FORWARD FACING USSC SEATS - ROLLTEK	**1**	**KMEM**
BA-06-7200		**** DELETE FORWARD FACING SEAT RISER - NOT REQUIRED	1	KMEM
BA-06-8055		NO SCBA PARADE COVERS SUPPLIED	1	KMEM
BA-06-8150		USSC SEATING MATERIAL - BLACK CORDURA	1	KMEM
		****** HEADER - VEHICLE DATA RECORDER SYSTEMS**	**1**	**KMEM**
BA-06-9103	>	CLASS ONE SEAT BELT WARNING SYSTEM - UP TO 6 POSITIONS - ULTRAVIEW DISP	1	KMEM
BA-06-9120		FIVE (5) SEATING POSITIONS	1	KMEM
BA-06-9250	>	HELMET HOLDERS - IN CAB - ZICO	4	KMEM
BA-06-9310		CLASS ONE VEHICLE DATA RECORDER - MULTIPLEX	1	KMEM
		****** HEADER - CAB INTERIOR ACCESSORIES & OPTIONS, 100" PREDATOR**	**1**	**KMEM**
BA-07-7010	>	STANDARD #MATM RADIO ANTENNA INSTALLED	1	KMEM
		****** HEADER - INSTRUMENTATION & CONTROLS, 100" PREDATOR - WIDE**	**1**	**KMEM**
BA-08-0210		DASH & CENTER CONSOLE - 100" PREDATOR (ABS VINYL)	1	KMEM
BA-08-0273		INSTRUMENT PANEL, 100" PREDATOR - WIDE ABS	1	KMEM
BA-08-0315		DIESEL EXHAUST FLUID LEVEL GAUGE	1	KMEM
BA-08-0320		ENGINE COMPRESSION BRAKE CONTROLS	1	KMEM
BA-08-0640		ULTRAVIEW 700 DISPLAY ON CAB DASH FOR ES-KEY SYSTEM	1	KMEM
BA-08-1220		INDICATOR CLUSTER, 100" PREDATOR	1	KMEM
BA-08-1235		"ATC DISABLED" INDICATOR CLUSTER	1	KMEM
BA-08-1240		"ATC ACTIVE" INDICATOR CLUSTER	1	KMEM
BA-08-1265		"OUTRIGGERS NOT STOWED" INDICATOR ON DASH	1	KMEM
BA-08-1810	>	AUXILIARY SWITCH PANEL - LOWER DASH AREA	1	KMEM
BA-08-1900		PUMP SHIFT CONTROL ON LOWER LEFT DASH PANEL	1	KMEM
BA-08-1950		MULTIPLEX CONTROL PUMP SHIFT SWITCH - MULTIPLEX	1	KMEM
BA-08-2005		AERIAL LADDER, LADDER POWER SWITCHES CAB (TDA)	1	KMEM
BA-08-2703		FLAT DASH IN FRONT OF OFFICER (ABS), 100" PREDATOR	1	KMEM
BA-08-2905		OVERHEAD ABS PANEL, FLAT FACED, 100" PREDATOR	1	KMEM
BA-08-3105		HEATER/DEFROSTER & ACCESS, PREDATOR 100" - 10" RAISED ROOF	1	KMEM
BA-08-6900		HVAC CONTROL SYSTEM - INCOPORATED INTO MULTIPLEX CONTROL DISPLAY	1	KMEM
BA-08-9000		CAB TILT SYSTEM & OPTIONS	1	KMEM
BA-08-9010	>	AUXILIARY - MANUAL CAB LIFT BACKUP SYSTEM	1	KMEM
BA-08-9110		PARKING BRAKE/CAB TILT INTERLOCK	1	KMEM
		FRAME & AXLE PACKAGE, TILLER SINGLE AXLE CHASSIS	**1**	**KMEM**
BA-09-5000	>	110,000 PSI FRAME: SINGLE MAIN RAIL	1	KMEM
		HEADER - FRONT BUMPER, EXTENSIONS & ACCESSORIES	**1**	**KMEM**
BA-10-0050	>	BUMPER 12" STAINLESS STEEL CONTOUR - ALL CABS	1	KMEM
BA-10-0097		**** REQ 10" EXT MIN, MECH SIREN SEMI RECES. IN BUMPER, CENTER ****	1	KMEM
BA-10-0110		10" FRONT BUMPER EXTENSION WITH TREAD PLATE GRAVEL SHIELD	1	KMEM

PART NO	S	DESCRIPTION	QTY	ID
BA-10-0405		TREADPLATE GRAVEL SHIELD STANDARD INSTALLATION	1	KMEM
BA-10-2010		TWO (2) PAINTED TOW HOOKS BELOW FRONT BUMPER	1	KMEM
BA-14-0150		21,500# FRONT AXLE MERITOR MFS-20-133A-N	1	KMEM
BA-14-1100		MERITOR "S" CAM BRAKES 16.5" X 6" FRONT AXLE, W/AUTO SLACK ADJUSTERS	1	KMEM
BA-14-2030		SUSPENSION FRONT - 21,500# RATING	1	KMEM
BA-14-2110		FRONT AXLE SHOCK ABSORBERS - MONROE "MAGNUM - 70"	1	KMEM
BA-14-5140		31,000# REAR AXLE MERITOR RS-30-185	1	KMEM
BA-14-6515		16.5" X 8.6" S-CAM BRAKES - MERITOR REAR AXLE, W/ AUTO SLACK	1	KMEM
BA-15-2810		VEHICLE TOP SPEED - 2016 NFPA STATEMENT	1	KMEM
BA-15-4820	>	HENDRICKSON FIREMAAX, FMX-312 AIR RIDE- SA 31,000#	1	KMEM
		****** HEADER - BRAKE SYSTEM, SINGLE AXLE VEHICLE**	**1**	**KMEM**
BA-20-1000		BRAKE SYSTEM, SA CHASSIS	1	KMEM
BA-20-1100		ABS BRAKING FOR SINGLE REAR AXLE CHASSIS	1	KMEM
BA-20-1200	>	AUTO TRACTION CONTROL (ATC) FOR ABS SYSTEM SINGLE REAR AXLE	1	KMEM
BA-20-1500		AIR RESERVOIRS 4700 CU IN SA, BASE	1	KMEM
BA-20-1800		STAINLESS STEEL AIR TANK BRACKETS - (3 TANKS)	1	KMEM
BA-20-2025		1/4 TURN DRAIN VALVES ON ALL AIR TANKS	1	KMEM
BA-20-3000		AIR DRYER, HEATED - BENDIX AD-9 12VOLT	1	KMEM
BA-20-5000		COLOR CODED SYNFLEX BRAKE LINES W/QUICK RELEASE FITTINGS - SA	1	KMEM
BA-20-5500		AIR COMPRESSOR -WABCO 18.7 CFM- STD. FOR ALL CUMMINS ENGINES	1	KMEM
BA-20-5810		BRAKE TREADLE VALVE	1	KMEM
BA-20-6010		PARKING BRAKE CONTROL - NEAR DRIVER - ALL WHEEL LOCK	1	KMEM
		HEADER, TIRE AND WHEEL OPTIONS	**1**	**KMEM**
		HEADER, WHEELS, 21,500 FRONT AXLE - ALUMINUM - 22.5 X 12.25	**1**	**KMEM**
BA-25-1035		FRONT WHEELS, POLISHED ALUMINUM, 22.5 X 12.25, 22,500#	1	KMEM
BA-25-1045		FRONT WHEELS, LUG AND HUB TRIM (ALUMINUM WHEELS)	1	KMEM
BA-25-2030	>	FRONT, GOODYEAR 425/65R22.5 L 24,400# G296 MSA MIXED - 68MPH	1	KMEM
BA-25-2400		GOODYEAR - FIRE SERVICE RATING - TIRE RESTRICTIONS	1	KMEM
		HEADER, TIRES & WHEELS, 31,000 SINGLE REAR AXLE	**1**	**KMEM**
BA-25-5080		REAR WHEELS, POLISHED ALUMINUM, 22.5 X 9, SA	1	KMEM
BA-25-5110		REAR WHEELS, LUG AND HUB TRIM, SA (ALUMINUM)	1	KMEM
BA-25-6085	>	REAR, GDYR 315/80R22.5 J 32,000# RHD II+ TRACTION - 75, SA	1	KMEM
BA-25-7400		GOODYEAR - FIRE SERVICE RATING - TIRE RESTRICTIONS	1	KMEM
BA-25-9900		TIRE PRESSURE MONITORING - LED VALVE STEM CAPS - SIX TIRES	1	KMEM
BA-26-5000		**** TIRE PRESSURE SYSTEMS MUST MATCH ON CHASSIS AND TRAILER ****	1	KMEM
		100" PREDATOR - ENGINE PACKAGE, TILLER SINGLE AXLE CHASSIS	**1**	**KMEM**
		****** 100" - HEADER, ENGINE & ENGINE COMPONENTS**	**1**	**KMEM**
BA-30-2215		CUMMINS ISX15 - 500 HP @ 1600 RPM TQ 1850 lb-ft @ 1200 - PREDATOR WIDE	1	KMEM
BA-30-9810		PROPOSED - ENGINE CERTIFICATION CUSTOM CHASSIS	1	KMEM
BA-32-0030		COOLING/RADIATOR, 100" PREDATOR - WIDE	1	KMEM
BA-32-0070		ENGINE COOLANT FILTER - CUMMINS ISC - ISX	1	KMEM
BA-32-0085		COOLING SYSTEM CRITERIA	1	KMEM
BA-32-0100		TRANSMISSION COOLER	1	KMEM
BA-32-0120		RADIATOR SKID PLATE	1	KMEM
BA-32-0180		CHARGED AIR COOLER (STACK MOUNT), 100" PREDATOR CAB	1	KMEM
BA-32-0250		COOLANT FAN, W/CLUTCH - CUMMINS ISX15	1	KMEM
BA-32-0340		HEATER AND COOLANT HOSES/PIPING	1	KMEM
BA-32-0420		LOW COOLANT INDICATOR LIGHT AND ALARM IN CAB	1	KMEM
BA-33-0020	>	SECONDARY BRAKING - ENGINE COMPRESSION BRAKE	1	KMEM
BA-33-0150		FAST IDLE CONTROL FOR ALL ELECTRONIC ENGINES - SMART WHEEL	1	KMEM
BA-33-0160		ENGINE AIR CLEANER	1	KMEM
BA-33-0180		SPARK ARRESTOR	1	KMEM
BA-33-0200		ACCELERATOR PEDAL - FLOOR MOUNT	1	KMEM
BA-33-0250		REMOTE THROTTLE & INTERLOCK HARNESS	1	KMEM
BA-40-0300		ALLISON 4000EVS TRANS. - COMPRESSION BRAKE	1	KMEM
BA-40-0660		FIVE (5) SPEED AUTOMATIC TRANSMISSION - 4000 SERIES	1	KMEM
BA-40-0700		ALLISON TRANSMISSIONS, ELECTRONIC TOUCH PAD SHIFTER IN CAB	1	KMEM

PART NO	S	DESCRIPTION	QTY	ID
BA-40-0855		TRANSMISSION OIL LEVEL SENSOR	1	KMEM
BA-40-0860		ALLISON PARK TO NEUTRAL	1	KMEM
BA-40-0910		ALLISON PRESELECT PROGRAMMING	1	KMEM
BA-40-0920		PRESELECT PROGRAMMED FOR 4TH GEAR	1	KMEM
BA-40-4750	>	TES 295 SYNTHETIC TRANS FLUID 4000EVS TRANSMISSION	1	KMEM
BA-45-0110		DRIVE LINES DANA-SPICER #1810 SERIES	1	KMEM
BA-49-0100		DIESEL EXHAUST FLUID TANK - 5 GALLON	1	KMEM
BA-50-0110		EXHAUST SYSTEM - DPF & SCR SYSTEM - INLINE SYSTEM	1	KMEM
BA-50-0155		ALUMINIZED STEEL EXHAUST TAILPIPE/OUTLET OS - DPF + SCR SYSTEM	1	KMEM
BA-50-2500		FUEL SYSTEM	1	KMEM
BA-50-2505		FUEL TANK - 50 GALLON, STEEL	1	KMEM
BA-50-2600		STAINLESS STEEL FUEL TANK STRAPS IN LIEU OF STEEL	1	KMEM
BA-50-2625		FUEL LINES - FIBER REINFORCED HOSE	1	KMEM
BA-50-2635		FUEL LINE SHUT-OFF VALVE	1	KMEM
BA-50-2645	>	CUMMINS FUEL-WATER SEPARATOR	1	KMEM
BA-50-2670		FUEL PUMP SECONDARY ELECTRIC, REQ. ON 210" W-B OR LONGER	1	KMEM
BA-50-2700		FUEL POCKET, LEFT SIDE REAR WHEEL WELL PANEL	1	KMEM
BA-50-5050	>	STEERING - DUAL SHEPPARD POWER STEERING GEARS	1	KMEM
BA-50-5150	>	SECONDARY POWER STEERING PUMP FOR TRAILER STEERING - ISX ENGINE ONLY	1	KMEM
BA-50-7110		STEERING COLUMN - CLOCK SPRING	1	KMEM
BA-50-7150		18" STEERING WHEEL - 4 SPOKE	1	KMEM
BA-50-7170		SMART WHEEL CONTROLS ON STEERING WHEEL	1	KMEM
BA-50-7202	>	DELETE - 4FRONT - FRONTAL AIR BAG PROTECTION SYSTEM IN STEERING WHEEL	1	KMEM
BA-50-9000		ROAD SAFETY KITS	1	KMEM
		****** HEADER, TILLER CHASSIS ELECTRICAL, 100" PREDATOR (OPTIONS)**	**1**	**KMEM**
		****** HEADER, TILLER W/ PUMP BODY ELECTRICAL (OPTIONS)**	**1**	**KMEM**
BE-01-0005		PREDATOR CHASSIS ELECTRICAL SYSTEM DESCRIPTION	1	KMEM
BE-01-0105		PREDATOR CHASSIS WIRING INSTALLATION	1	KMEM
BE-01-0150		DIRECT BATTERY GROUNDING STRAP - PREDATOR	1	KMEM
BE-01-0153		EMI/RFI PROTECTION	1	KMEM
BE-01-0205		PREDATOR 12 VOLT ELECTRICAL SYSTEM TESTING	1	KMEM
BE-05-0353		CLASS-1 ES-KEY MULTI-PLEXED ELECTRICAL SYSTEM 100" PREDATOR	1	KMEM
BE-05-0460		CLASS-1 ES-KEY ULTRAVIEW 700 DISPLAY	1	KMEM
BE-05-0800		INTER-LOCK MODULE FOR MULTIPLEX SYSTEM	1	KMEM
BE-05-0810		WELDON SWIVEL MOUNTING BRACKET FOR CONTROL SCREEN	1	KMEM
BE-05-0900		CHASSIS DIAGNOSTICS SYSTEM	1	KMEM
BE-05-1160		VOLTAGE MONITORING SYSTEM - 12 VOLT	1	KMEM
BE-05-1165		INDICATOR LIGHT AND ALARM PROVE-OUT SYSTEM	1	KMEM
BE-05-1170		SEQUENCER	1	KMEM
BE-05-1175		ELECTRICAL HARNESS INSTALLATION - 12 VOLT	1	KMEM
BE-10-0487		DELCO REMY 40SI, 320 AMP BRUSHLESS ALTERNATOR	1	KMEM
BE-15-0730		BATTERIES - SIX (6) EXIDE GROUP 31, 925CCA	1	KMEM
BE-15-1105		PREDATOR BATTERY STORAGE, STEEL, MFD, XMFD, LFD, XLFD	1	KMEM
BE-15-1500		BATTERY DISCONNECT SWITCH, ALL UNITS	1	KMEM
BE-15-1555		COLE HERSEE BATTERY JUMPER STUDS, DS BATTERY BOX	1	KMEM
BE-20-1635		120 VOLT 20 AMP SUPER AUTO EJECT FOR BATT CHARGER - CUSTOM	1	KMEM
BE-20-1715		SHORELINE RECEPTACLE LABEL - NFPA	1	KMEM
BE-20-1720		RED COVER FOR KUSSMAUL AUTO-EJECT RECEPTACLE, #091-55RD	1	KMEM
BE-20-1750		SHORELINE LOCATION - ADJACENT TO DRIVER'S DOOR	1	KMEM
BE-20-2000		KUSSMAUL MODEL 1200, 40AMP, BATTERY CHARGER	1	KMEM
BE-30-2750		CONTROL SWITCHING THROUGH MULTIPLEX TOUCH SCREENS	1	KMEM
BF-00-0515		WELDON #8080-8000-13 WHITE/RED LED INTERIOR LIGHTS (4)	1	KMEM
BF-00-5000		DOOR OPEN INDICATOR W/ INTEGRAL AUDIBLE ALARM	1	KMEM
		****** HEADER, 12V POWER/ USB CHARGING/ POWER - GROUND CIRCUITS, CUSTOM ******	**1**	**KMEM**
BF-01-1020	>	12 VOLT POWER PORT LOCATED IN CAB AS DIRECTED	1	KMEM
BF-01-4200	>	KUSSMAUL USB CHARGING PORT LOCATED IN CAB AS DIRECTED	1	KMEM
BF-01-6000		12 VOLT POWER AND GROUND CIRCUIT FOR ACCESSORIES IN DASH	1	KMEM

PART NO	S	DESCRIPTION	QTY	ID
		****** HEADER, REAR/SIDE VISION CAMERA SYSTEMS ******	**1**	**KMEM**
BF-20-0040		DUAL HEADLIGHTS, LED, PREDATOR - J.W. SPEAKER - DUAL BEZELS	1	KMEM
BF-20-0320		DAYTIME RUNNING LIGHTS, ALL CABS	1	KMEM
BG-00-0055		DUAL MODULE w/ CODE 3 65STA LED TURN SIGNAL & REQ WARN LIGHT	1	KMEM
BG-00-0460		CUST TILLER CHASSIS LED MARKER LIGHTS	1	KMEM
BG-00-0560		CUST TILLER BODY LED MARKER LIGHTS	1	KMEM
BG-00-1200		WHELEN LED MARKER LIGHTS @ TOP FRONT ROOF EDGE OF CAB	1	KMEM
BG-00-1620		TRUCK-LITE MARKER/TURN LIGHTS @ EA SIDE OF BODY - TDA	1	KMEM
BG-00-1660		TRUCK-LITE MARKER LIGHTS @ REAR OF BODY	1	KMEM
BG-00-1800		TRUCK-LITE DOT AMBER REFLECTORS @ SIDE OF BODY	1	KMEM
BG-00-1810		TRUCK-LITE DOT RED REFLECTORS @ REAR OF BODY	1	KMEM
BG-00-2915		TECNIQ #L10 LED LICENSE PLATE LIGHT @ DS REAR OF BODY	1	KMEM
BG-02-2520		CODE 3, #65 LED BRAKE, REVERSE, & TURN	1	KMEM
BH-04-1050		CAB STEP LIGHTS, TECNIQ EON 3 LED, ALL DEVICES	4	KMEM
BH-04-1130		BODY STEP LIGHTS, TECNIQ EON 3 LED, ALL DEVICES	4	KMEM
		****** HEADER, SCENE LIGHTS - MM / TDA**	**1**	**KMEM**
		****** HEADER, SCENE LIGHTS - LADDER/PLATFORM W/ PUMP**	**1**	**KMEM**
BH-11-0500		NFPA (4) JW SPEAKER LED RECTANGLE GROUND LIGHTS, BELOW CAB DOORS	1	KMEM
BH-11-0540		GROUND LIGHTS, 2 LED UNDER FRONT BUMPER FACING FORWARD - RH	1	KMEM
BH-11-0560		GROUND LIGHTS, 2 LED BELOW PUMP PANEL RUNNING BOARD - RH	1	KMEM
BH-11-0585		GROUND LIGHTS, 2 LED, AT REAR BODY CORNERS - RH	1	KMEM
BH-11-3750		CAB AND BODY GROUND LIGHTS ACTIVATE WITH PARKING BRAKE	1	KMEM
BH-11-3765		CAB AND BODY GROUND LIGHTS - SWITCH @ IN CAB	1	KMEM
		****** HEADER, BROW AND CAB RADIUS LIGHTS - CUSTOM CHASSIS**	**1**	**KMEM**
		****** HEADER, TELESCOPING LIGHTS, REAR OF CAB - CUSTOM CHASSIS**	**1**	**KMEM**
BH-12-2200		FRC BROW LIGHT, SPECTRA LED, 155W12V, (1) ABOVE WINDSHIELD	1	KMEM
BH-14-0020		CONTROL SWITCH IN CAB FOR LIGHT(S) ABOVE WINDSHIELD	1	KMEM
BI-00-0200		AERIAL BODY ELECTRICAL SYSTEM	1	KMEM
BI-00-0205		AERIAL BODY ELECTRICAL JUNCTION COMPARTMENT	1	KMEM
BI-00-0220		TILLERS, AERIAL DEVICE ELECTRICAL JUNCTION COMPARTMENT	1	KMEM
BI-00-0525		BODY ELECTRICAL HARNESS - ES-KEY	1	KMEM
BJ-00-5115		PUMP ENCLOSURE WORK LIGHTS - TECNIQ LED	1	KMEM
BJ-00-5165		ENGINE COMPARTMENT WORK LIGHTS - TECNIQ LED	1	KMEM
BJ-00-7110		TRACTOR ALIGNMENT LIGHT ON TRACTOR CAB ROOF HELLA MARINE NAVILED®360	1	KMEM
		COMPARTMENT LIGHTS - TDA	**1**	**KMEM**
BJ-02-1055	>	COMPT. LIGHTS, TECNIQ E18 LED	17	KMEM
		****** CUSTOM TDA NFPA WARNING LIGHT PACKAGE**	**1**	**KMEM**
BL-95-0000		NFPA COMPLIANT WARNING LIGHT PACKAGE - ALL UNITS	1	KMEM
BL-95-0100		LIGHT PACKAGE ACTUATION/CONTROLS - ALL UNITS	1	KMEM
BL-98-0000		WARNING LIGHT FLASH PATTERN - NFPA FLASH PATTERN	1	KMEM
BM-00-0206		CODE 3 UPPER PACKAGE - CUSTOM TDA	1	KMEM
BM-01-0505	>	LIGHTBAR RISER FOR SCENE LIGHT CLEARANCE	1	KMEM
BM-02-0100		A-UPPER, CODE 3 LED DF82ANFPA1, DEFENDER 82" TRICORE BAR	1	KMEM
BM-02-1038		C-UPPER, CODE 3 LED 10" PRIZM II, DUOBEAM II - CLEAR LENS	1	KMEM
BM-02-2000		B/D-UPPER REAR, COVERED BY LIGHTS IN ZONE C-UPPER	1	KMEM
BM-02-3000		B/D-UPPER FRONT, COVERED BY LIGHTS IN ZONE A-UPPER	1	KMEM
BM-07-0206		CODE 3 LOWER PACKAGE - CUSTOM TDA	1	KMEM
BM-09-0018	>	A-LOWER FRONT, CODE 3 65 SERIES LED	1	KMEM
BM-09-0098		A-LOWER FRONT MOUNTING, CUSTOM CHASSIS	1	KMEM
BM-09-1014	>	C-LOWER REAR, CODE 3 65 SERIES LED	1	KMEM
BM-09-2006	>	B/D-LOWER FRONT, CODE 3 65 SERIES LED	1	KMEM
BM-09-2098		B/D-LOWER FRONT MOUNTING, CUSTOM CHASSIS	1	KMEM
BM-09-3006	>	B/D-LOWER MID, CODE 3 65 SERIES LED	1	KMEM
BM-09-3506	>	B/D-LOWER SECONDARY MID, CODE 3 65 SERIES LED	1	KMEM
BM-09-4006	>	B/D-LOWER REAR, CODE 3 65 SERIES LED	1	KMEM
BM-15-0000		LIGHT PACKAGE NFPA CERTIFICATION - ALL UNITS	1	KMEM
		****** HEADER, OPTIONAL WARNING LIGHTS**	**1**	**KMEM**
		****** HEADER, AUDIBLE WARNING & COMMUNICATION EQUIPMENT**	**1**	**KMEM**

PART NO	S	DESCRIPTION	QTY	ID
BW-00-0510		CHASSIS SINGLE ELECTRIC (DOT) HORN	1	KMEM
BW-00-0560		CODE 3, #CA278, BACK-UP ALARM - 87DBA	1	KMEM
BW-00-5000	>	DUAL CHROME AIR HORNS	1	KMEM
BW-00-5100		DUAL AIR HORNS RECESSED IN FRONT BUMPER, STD	1	KMEM
BW-00-5200		AIR HORN CTRL - FOOT FOR OFFICER & STEERING WHEEL FOR DRIVER	1	KMEM
BW-01-0120		SIREN, WHELEN # 295HFS2, 100W - FLUSH MOUNT	1	KMEM
BW-01-1000		ONE (1) WHELEN SP123BMC SPEAKER	1	KMEM
BW-02-0000	>	FEDERAL Q2B SIREN @ CAB FRONT	1	KMEM
BW-02-0035		Q2B MOUNT - SEMI-RECESSED INTO CENTER OF BUMPER	1	KMEM
BW-02-2000		SIREN CONTROL - FLOOR SWITCH, DRIVER AND OFFICER	1	KMEM
		****** HEADER, PUMP, TANK & ACCESSORIES, 100' & 101' TILLER**	**1**	**KMEM**
		BASE PUMP, ALL TILLERS	**1**	**KMEM**
DC-00-2345		WATEROUS CSU-C20-2000 SINGLE STAGE PUMP	1	KMEM
DC-01-4600		WATEROUS PUMP PACKING	1	KMEM
DC-01-610A	>	*** ISX-15 ENGINE HAS HIGH TORQUE RATING - "K" GEARBOX IS REQUIRED W/HALE PUMP *	1	KMEM
DC-01-6210		WATEROUS "C20" PUMP DRIVE UNIT, ALL WATEROUS MID-SHIP PUMPS	1	KMEM
DC-01-6490		PUMP RATIO (HALE, WATEROUS OR DARLEY)	1	KMEM
DC-01-7140		WATEROUS AIR SHIFT	1	KMEM
DC-01-8590		PUMP SHIFT MANUAL OVERRIDE (HALE, WATEROUS OR DARLEY)	1	KMEM
DC-01-8615		WATEROUS PUMP SHIFT INDICATOR LIGHTS	1	KMEM
DC-01-9020		TRANSMISSION LOCK-UP (HALE, WATEROUS OR DARLEY)	1	KMEM
DC-02-1900		PUMP MOUNTS - MID-SHIP PUMPS	1	KMEM
DC-02-1990		PUMP INSTALLATION - CUSTOM	1	KMEM
		****** HEADER, WATEROUS CSU, CMU, PRESSURE CONTROL**	**1**	**KMEM**
DC-05-1226		FIRE RESEARCH "IN CONTROL" TGA-400 PRESSURE GOVERNOR	1	KMEM
DC-05-1295		TASK FORCE TIPS #A18 SERIES INTAKE RELIEF VALVE	1	KMEM
DC-05-2500		PUMP UL CERTIFICATION - 750 GPM & UP	1	KMEM
		WATEROUS, PUMP PRIMING PUMP AND CONTROLS	**1**	**KMEM**
DC-05-3680	>	TRIDENT "MANUAL" AIR PRIMING SYSTEM	1	KMEM
		WATEROUS, DRAINS & ACCESSORES	**1**	**KMEM**
DC-05-5110		ROTARY MASTER DRAIN VALVE	1	KMEM
DC-05-5400		DRAINS/BLEEDER "INNOVATIVE CONTROLS" LIFT UP @ ALL 1-1/2" OR LARGER	1	KMEM
DC-05-5500		SYNFLEX SUCTION, DISCHARGE, PRESSURE AND CONTROL LINES	1	KMEM
DC-05-6220		WATEROUS ANODE BLOCKS - 2 TOTAL	1	KMEM
DC-10-2025		SIDE MOUNT PUMP MODULE, TILLER AERIAL	1	KMEM
DC-10-2500		PUMP MODULE - STEEL CONSTRUCTION	1	KMEM
		****** HEADER, SUCTIONS - TDA, SIDE MOUNT**	**1**	**KMEM**
DC-14-3230		WATEROUS MAIN SUCTION INLETS 6" NST, 2000 GPM CSU PUMP	1	KMEM
DC-14-5300		SHORT NECK MAIN PUMP SUCTION INLETS - DS & OS	1	KMEM
DC-14-5560	>	6" NST MAIN PUMP SUCTION PRESSURE VENTED CAPS (2)	1	KMEM
		HEADER - AUXILIARY SUCTION/S - AERIALS	**1**	**KMEM**
DC-20-1000		2 1/2" AUX. SIDE SUCTION @ DS PANEL TO REAR OF MAIN INLET	1	KMEM
DC-20-1100		2 1/2" AKRON #8800 S.S. BALL VALVE, DS REAR AUX SUCTION	1	KMEM
DC-20-1200		SWING CONTROL @ VALVE, DS REAR AUX SUCTION	1	KMEM
DC-20-9500		BEHIND PANEL MOUNT	1	KMEM
		****** HEADER - TANK TO PUMP - TILLERS**	**1**	**KMEM**
DC-25-1200		TANK TO PUMP - 3" VALVE - LADDERS & PLATFORMS	1	KMEM
DC-25-3110		3" AKRON #8800 SERIES - S.S. BALL, VALVE , TANK TO PUMP	1	KMEM
DC-25-5110		3" PUSH/PULL CONTROL FOR TANK TO PUMP	1	KMEM
		****** HEADER - TANK FILL - TILLERS**	**1**	**KMEM**
DC-30-2100		TANK FILL LINE 2" FROM PUMP - SIDE MOUNT	1	KMEM
DC-30-2300		2" AKRON #8800 SERIES - S.S. BALL TANK FILL, SIDE MOUN	1	KMEM
DC-30-6500		PUSH/PULL CONTROL FOR TANK FILL	1	KMEM
		****** DISCHARGES & ACCESSORIES, TILLER - SIDE MOUNT**	**1**	**KMEM**
		DRIVER'S SIDE #1 MAIN DISCHARGE	**1**	**KMEM**
DC-35-0010		DS MAIN DISCHARGE #1 - SIDE MOUNT	1	KMEM
DC-35-0110		2 1/2" AKRON #8800 SERIES - S.S. BALL, DS #1, SIDE MOUNT	1	KMEM
DC-35-1815		DS #1 DISCH - 2 1/2" STRAIGHT NST & 30-DEGREE NST ELBOW	1	KMEM

PART NO	S	DESCRIPTION	QTY	ID
DC-35-2010		2 1/2" NST PRESSURE VENTED CAP - DS DISCHARGE #1	1	KMEM
DC-35-2410		PUSH/PULL CONTROL FOR DS DISCHARGE #1 -SIDE MOUNT	1	KMEM
DC-35-3110		INNOVATIVE CONTROLS LIQUID FILLED 2 1/2" PRESS GAUGE SS- DS DISCHARGE #1	1	KMEM
		DRIVER'S SIDE #2 MAIN DISCHARGE	**1**	**KMEM**
DC-35-5010		DS MAIN DISCHARGE #2 - SIDE MOUNT	1	KMEM
DC-35-5110		2 1/2" AKRON #8800 SERIES - S.S. BALL, DS #2, SIDE MOUNT	1	KMEM
DC-35-6815		DS #2 DISCH - 2 1/2" STRAIGHT NST & 30-DEGREE NST ELBOW	1	KMEM
DC-35-7010		2 1/2" NST PRESSURE VENTED CAP - DS DISCHARGE #2	1	KMEM
DC-35-7410		PUSH/PULL CONTROL FOR DS DISCHARGE #2 -SIDE MOUNT	1	KMEM
DC-35-8110		INNOVATIVE CONTROLS LIQUID FILLED 2 1/2" PRESS GAUGE SS- DS DISCHARGE #2	1	KMEM
		OFFICER'S SIDE #1 MAIN DISCHARGE	**1**	**KMEM**
DC-39-0010	>	OS MAIN DISCHARGE #1 - SIDE MOUNT	1	KMEM
DC-39-0110		2 1/2" AKRON #8800 SERIES - S.S. BALL, OS #1, SIDE MOUNT	1	KMEM
DC-39-1815		OS #1 DISCH - 2 1/2" STRAIGHT NST & 30-DEGREE NST ELBOW	1	KMEM
DC-39-2010		2 1/2" NST PRESSURE VENTED CAP - OS DISCHARGE #1	1	KMEM
DC-39-2410		PUSH/PULL CONTROL FOR OS DISCHARGE #1 -SIDE MOUNT	1	KMEM
DC-39-3110		INNOVATIVE CONTROLS LIQUID FILLED 2 1/2" PRESS GAUGE SS- OS DISCHARGE #1	1	KMEM
		OFFICER'S SIDE #2 MAIN DISCHARGE	**1**	**KMEM**
DC-39-5010	>	OS MAIN DISCHARGE #2 - SIDE MOUNT	1	KMEM
DC-39-5080	>	**** WATEROUS PUMP LDH DISCHARGE PORT ****	1	KMEM
DC-39-5130	>	4" AKRON #8840 VALVE, OS #2, SIDE MOUNT	1	KMEM
DC-39-6860		OS #2 DISCH - 4" STRAIGHT NST & 30-DEGREE NST ELBOW	1	KMEM
DC-39-7045		DELETE 4" NST CAP - OS DISCHARGE #2	1	KMEM
DC-39-7310		4" NSTF X 4" STORZ STRAIGHT KOCHEK S37S ADAPTER WITH CAP OS DIS	1	KMEM
DC-39-7810	>	AKRON HANDWHEEL GEAR VALVE CONTROL, OS DISCHARGE #2	1	KMEM
DC-39-8110		INNOVATIVE CONTROLS LIQUID FILLED 2 1/2" PRESS GAUGE SS- OS DISCHARGE #2	1	KMEM
		CROSSLAY #1 DISCHARGE	**1**	**KMEM**
DC-47-0400		CROSSLAY #1, 1 1/2" - AERIAL	1	KMEM
DC-47-1110		CROSSLAY #1 CAPACITY - 200' OF 1 3/4" HOSE	1	KMEM
DC-47-1410		CROSSLAY #1 - DOUBLE STACK HOSE DESIGN	1	KMEM
DC-47-1510		1 1/2" NST CHICKSAN SWIVEL - CROSSLAY #1	1	KMEM
DC-47-2110		CROSSLAY #1, PLUMBING, 2" STAINLESS STEEL PIPING	1	KMEM
DC-47-2210		2" AKRON #8800 SERIES - S.S. BALL, VALVE CROSSLAY #1, DISCH	1	KMEM
DC-47-2610		PUSH/PULL 1/4 TURN CONTROL CROSSLAY #1	1	KMEM
DC-47-3210		INNOVATIVE CONTROLS LIQUID FILLED 2 1/2" PRESS GAUGE SS - CROSSLAY #1	1	KMEM
		CROSSLAY #2 DISCHARGE	**1**	**KMEM**
DC-47-5400		CROSSLAY #2, 1 1/2" - AERIAL	1	KMEM
DC-47-6110		CROSSLAY #2 CAPACITY - 200' OF 1 3/4" HOSE	1	KMEM
DC-47-6410		CROSSLAY #2 - DOUBLE STACK HOSE DESIGN	1	KMEM
DC-47-6510		1 1/2" NST CHICKSAN SWIVEL - CROSSLAY #2	1	KMEM
DC-47-7110		CROSSLAY #2, PLUMBING, 2" STAINLESS STEEL PIPING	1	KMEM
DC-47-7210		2" AKRON #8800 SERIES - S.S. BALL, VALVE CROSSLAY #2,	1	KMEM
DC-47-7610		PUSH/PULL 1/4 TURN CONTROL CROSSLAY #2	1	KMEM
DC-47-8210		INNOVATIVE CONTROLS LIQUID FILLED 2 1/2" PRESS GAUGE SS - CROSSLAY #2	1	KMEM
		CROSSLAY & SPEEDLAY OPTIONS - RM AERIAL	**1**	**KMEM**
DC-50-7015	>	VINYL CROSS LAY COVER	1	KMEM
DC-50-7030		CROSSLAY COVER RED IN COLOR	1	KMEM
		PUMP PANELS & ACCESSORIES	**1**	**KMEM**
DD-65-0515		SIDE MOUNT PUMP PANEL - TDA	1	KMEM
DD-65-4115		SIDE MOUNT PANELS - 12 GAUGE BRUSHED STAINLESS STEEL	1	KMEM
DD-65-4710		VERTICALLY HINGED GAUGE PANEL - SIDE MOUNT	1	KMEM
DD-65-4810		OFFICER SIDE VERTICALLY HINGED PUMP ACCESS DOOR - SIDE MOUNT	1	KMEM
DD-65-5150		PANEL FASTENERS	1	KMEM
DD-65-5510		CAPS AND ADAPTERS SAFETY TETHER - BALL CHAIN	1	KMEM

PART NO	S	DESCRIPTION	QTY	ID
DD-65-8820		PUMP PANEL DISCH./SUCTION TRIM PLATES, HIGH POLISHED	1	KMEM
DD-65-9000		DISCHARGE GAUGE TRIM BEZELS	1	KMEM
DD-65-9110		IDENTIFICATION PLATES	1	KMEM
DD-66-0100		PUMP OPERATOR'S PANEL LIGHT SHIELD	1	KMEM
DD-66-0135		TECNIQ E18 LED LIGHTS - LIGHT SHIELD	1	KMEM
DD-66-2100		OS PUMP PANEL LIGHTING	1	KMEM
DD-66-2130		TECNIQ EON 3 LED LIGHTS - OS PUMP PANEL	1	KMEM
		PUMP OPERATOR'S PANEL - SIDE MOUNT, AERIAL	**1**	**KMEM**
DD-70-2150		AIR HORN CONTROL BUTTON ON PUMP PANEL	1	KMEM
DD-70-2290		3/4" PUMP BY-PASS COOLER ON PUMP PANEL	1	KMEM
DD-70-2335		FIRE RESEARCH "IN CONTROL" PRESSURE GOVERNOR CONTROL @ PANEL	1	KMEM
DD-70-2410		PUMP PRESSURE & VACUUM TEST PORTS @ PANEL	1	KMEM
DD-70-4125	>	DELETE - MASTER PRESSURE & COMPOUND GAUGES	1	KMEM
DD-70-4130		**** CONSIDER DELETING MASTER GAUGES - IN GOVERNOR DISPLAY ****	1	KMEM
DD-70-4680		PRESSURE & COMPOUND GAUGE RANGES - SINGLE STAGE	1	KMEM
DD-70-4900		AUXILIARY ENGINE COOLER	1	KMEM
		WATER TANK LEVEL GAUGE - AERIAL	**1**	**KMEM**
DD-72-0410		FIRE RES - TANK VISION #WLA300-A00 LED WATER TANK GAUGE - PRIMARY	1	KMEM
DD-72-1300	>	FIRE RES WATER LEVEL - 1/4" NPT PRESS TRANS @ BOTTOM TANK	1	KMEM
DD-80-0110		SLIDE-OUT STEP @ DRIVER'S PUMP OPERATOR'S PANEL	1	KMEM
DE-00-1080	>	**** HEADER, 100' & 101' TDA, WATER TANK	1	KMEM
		WATER TANKS/OPTIONS AERIALS	**1**	**KMEM**
DE-05-1500	>	UPF POLYIIE TANK, 250 GAL. - AERIAL	1	KMEM
DE-05-6000		TANK DESCRIPT, CONSTR AND MOUNT, UPF POLY IIE TANK	1	KMEM
JA-00-0100		BODY AND COMPARTMENT HEADER (ALL AERIAL DEVICES)	1	KMEM
JA-00-5090		GENERAL ALUMINUM BODY DESCRIPTION FOR 100' TILLER AERIALS	1	KMEM
TF-00-8850		TILLER, T-T ACCESS LADDER TRACTOR CAB, DRIVER SIDE - PUMP (SWITCH BACK)	1	KMEM
TF-00-8950		TILLER TRACTOR, DS ACCESS LADDER FORWARD OF FENDER (SWITCH BACK)	1	KMEM
TF-09-0300	>	COMPARTMENTATION, 101-TIL STYLE #1H	1	KMEM
		****** HEADER, TDA BODY OPTIONS**	**1**	**KMEM**
TF-10-0100		BEVELED OVERLAPPING DOORS, ALL COMPARTMENTS, ALL DEVICES	1	KMEM
TF-10-1900		BRUSHED FINISHED DOOR PANS - 2" THICK DOORS	1	KMEM
TF-10-2700		DOOR HINGE FOR BEVELED OVERLAPPING HINGED DOORS	1	KMEM
TF-10-2800		DOOR SEAL FOR BEVELED OVERLAPPING HINGED DOORS	1	KMEM
TF-10-2940		ROTARY LATCHES WITH D-RING HANDLES	1	KMEM
TF-10-3150		GAS SHOCK ON HORIZONTALLY & VERTICALLY HINGED DOORS	1	KMEM
TF-10-6000		COMPARTMENT FLOORS (AERIALS ONLY)	1	KMEM
TF-11-0500		COMPARTMENT GENERAL DESCRIPTION, ALL LADDERS & PLATFORMS	1	KMEM
TF-11-1470		PAINTED REAR BODY PANEL, TILLERS	1	KMEM
TF-11-2265		PAINTED 1/2 WIDTH OUTRIGGER COVER PANEL, TILLER DEVICES	1	KMEM
TF-11-3030		BODY RUB RAILS, TREAD PLATE	1	KMEM
TF-12-1000		RUNNING BOARD STEPS (AERIALS ONLY)	1	KMEM
TF-13-3500		TILLER, TILLER CAB ACCESS LADDERS	1	KMEM
TF-13-5060		TILLER, BODY HANDRAILS	1	KMEM
TF-14-1100		ALUMINUM WHEEL WELL LINERS, TILLER TRAILER	1	KMEM
TF-14-1705		POLISHED ALUMINUM FENDERETTES, TILLER TRAILER AXLE	1	KMEM
TF-14-2000		TILLER TRACTOR, REAR WHEEL WELLS & FENDERS - ROLLED TREADPLATE	1	KMEM
TF-14-2070		TILLER TRACTOR, POLISHED ALUMINUM FENDERETTES	1	KMEM
TF-14-5005		REAR MUD FLAPS, TILLER ONLY	1	KMEM
TF-14-6500		PAINTED REAR TOW EYES, THROUGH REAR SHEET	1	KMEM
		****** HEADER, COMPARTMENT ACCESSORIES - TDA**	**1**	**KMEM**
TJ-05-1010		ADJUSTABLE SHELF DESCRIPTION - TDA	1	KMEM
TJ-05-2000	>	(AUTO QTY) ADJUSTABLE SHELF(S), MOUNTED AS DIRECTED	8	KMEM
TJ-10-1010		250#, FLOOR MOUNTED, ROLLOUT TRAY DESCRIPTION - TDA	1	KMEM
TJ-10-1105	>	(AUTO QTY) ROLLOUT TRAY(S), MOUNTED AS DIRECTED	4	KMEM

PART NO	S	DESCRIPTION	QTY	ID
TJ-55-1020		SWING OUT TOOL BOARD, PAC TRAC DOUBLE FACED EXTRUSION - TDA	1	KMEM
TJ-55-1200	>	(AUTO QTY) SWING OUT TOOL BOARD(S), MOUNTED AS DIRECTED	1	KMEM
		****** HEADER, TDA WITH PUMP 120/240 VOLT AC ELEC & GEN**	**1**	**KMEM**
TL-03-0000		120/240 VOLT ELECTRICAL SYSTEM TESTING	1	KMEM
TL-09-0035		**** PICK GENERATOR LOCATION - TDA WITH PUMP ****	1	KMEM
TL-15-1000		120 & 240 VOLT WIRING METHODS	1	KMEM
	>	**"NOTE" READ THIS BEFORE ADDING ANY ADDITIONAL GROUND LADDERS**	**1**	**KMEM**
		****** HEADER, 101 TDA GROUND LADDERS**	**1**	**KMEM**
TN-00-5100	>	CENTER LADDER STORAGE, 101' LADDER, TILLER	1	KMEM
TN-00-7050		HINGED PAINTED ALUM DOOR, LADDER STORAGE, TILLER ONLY	1	KMEM
TN-01-1040		ALCO-LITE LADDER COMP, 101' TILLER, 115 FEET COMP	1	KMEM
TN-02-1150		ALCO-LITE PEL-35 35' 2-SECTION EXTENSION LADDER (ALUM)	1	KMEM
TN-02-1170		ALCO-LITE PEL-24 24' 2-SECTION EXTENSION LADDER (ALUM)	1	KMEM
TN-02-2510		ALCO-LITE PRL-16 16' ROOF LADDER W/FOLDING HOOKS (ALUM)	2	KMEM
TN-02-7000		ALCO-LITE AEL-14 14' ATTIC EXTENSION LADDER (ALUM)	1	KMEM
TN-02-8010		ALCO-LITE FL-10 10' FOLDING ATTIC LADDER (ALUM)	1	KMEM
		****** HEADER, PIKE POLES & HOLDERS - AERIALS**	**1**	**KMEM**
TN-10-0500	>	PIKE POLE TUBE(S) - AERIALS	6	KMEM
TN-10-2020		FIRE HOOKS UNLIMITED PIKE POLES 2-6', 2-8', & 2-10' WITH FIB	1	KMEM
TN-20-0000		ADDITIONAL ITEMS SHIPPED WITH VEHICLE, ALL AERIAL DEVICES	1	KMEM
		****** HEADER, LOOSE EQUIPMENT - AERIAL**	**1**	**KMEM**
TN-35-1015		TWO (2) ZICO #SAC-44 FOLDING WHEEL CHOCKS, (2) MTD DRIVER SIDE	1	KMEM
		****** HEADER, 101' TILLER TRAILER**	**1**	**KMEM**
TP-00-0450		TILLER TRAILER FRAME ASSEMBLY, 101' LADDER	1	KMEM
TP-00-0480		TILLER TRAILER WHEELBASE - 343"	1	KMEM
TP-00-0505		TRAILER, STEERING AXLE, MERITOR MFS-20-133A-N, 23,000	1	KMEM
TP-00-0550		TRAILER, MERITOR STEER AXLE EX-225 DISK BRAKES	1	KMEM
TP-00-0600		TILLER TRAILER, SUSPENSION, RIDEWELL RAS-227 AIR RIDE	1	KMEM
TP-00-0700	>	TILLER TRAILER, STEERING AXLE POLISHED ALUMINUM WHEELS	1	KMEM
TP-00-0750		TILLER TRAILER, GOODYEAR G296 MSA TIRES 425/65R X 22.5, 24,400#	1	KMEM
TP-00-0800		TIRE PRESSURE MONITORING - VALVE STEM CAPS - TDA TIRES	1	KMEM
TP-00-0830		**** TIRE PRESSURE SYSTEMS MUST MATCH ON CHASSIS AND TRAILER ****	1	KMEM
TP-00-0850		TILLER TRAILER, STEERING SYSTEM, ROSS TA-70	1	KMEM
TP-00-0875		TILLER TRAILER, STEERING PUMP - DIRECT DRIVE ON CUMMIN ISX ENGINE	1	KMEM
TP-00-0950		TILLER TRAILER, 100' & 101' LADDER, FIFTH WHEEL PIVOT	1	KMEM
		****** HEADER, TILLER CAB & OPTIONS**	**1**	**KMEM**
TP-50-1000		TILLER CAB, GENERAL DESCRIPTION	1	KMEM
TP-50-1100		TILLER CAB, INTERIOR	1	KMEM
TP-50-1150		TILLER CAB, INTERIOR PAINT - JOB COLOR	1	KMEM
TP-50-1220	>	TILLER CAB SEAT, USSC	1	KMEM
TP-50-1490		USSC SEATING MATERIAL - BLACK CORDURA	1	KMEM
TP-50-1520		TILLER CAB SEAT, RED LAP SEAT BELT	1	KMEM
TP-50-1550		TILLER CAB WIND/GLASS, "NO POST VISION", SLIDING DOORS	1	KMEM
TP-50-1600		TILLER CAB, WINDSHIELD WIPERS, SINGLE PANOGRAPHIC	1	KMEM
TP-50-1610		TILLER CAB, STEERING WHEEL/COLUMN	1	KMEM
TP-50-1650		TILLER CAB, LEXAN SUNVISOR	1	KMEM
TP-50-1800		TILLER CAB, ALUMINUM KNURLED GRAB RAILS, EACH SIDE	1	KMEM
TP-50-1910		TILLER CAB, VELVAC # 708164-5, 6-1/2" x 6" CONVEX MIRROR FRONT CORNER OF CAB	1	KMEM
TP-50-2000		TILLER CAB, SLIDING DOORS	1	KMEM
TP-50-5000		TILLER CAB, INSTRUMENT & SWITCH PANEL	1	KMEM
TP-50-5010		TILLER CAB, TURNSIGNAL INDICATORS, WELDON #9186-1500-20, AMBER, DASH MOUNTED	1	KMEM
TP-50-5025		TILLER CAB, WELDON 8080-8000-13 WHITE/RED LED INTERIOR LIGHTS	1	KMEM
TP-50-5200		TILLER CAB, PARK BRAKE INTERLOCK WARNING - CENTER WHEEL BUTTON	1	KMEM
TP-50-5210		TILLER CAB, SAFETY START SYSTEM - TILLER CAB STEERING COLUMN (HIGH BEAM SWITCH)	1	KMEM

PART NO	S	DESCRIPTION	QTY	ID
TP-50-5300		TILLER CAB, BUZZER - LINEMASTER #491-S FOOT SWITCHES	1	KMEM
TP-50-6050		TILLER CAB, HEATER - BUS AIR 12VDC - 1100 BTU	1	KMEM
		****** HEADER, 101' TILLER LADDER**	**1**	**KMEM**
TQ-00-2100		101' LADDER, TILLER GEN, INTENT & DESIGN STANDARDS	1	KMEM
TQ-00-3050		MOUNTING OF AERIAL, TILLERS	1	KMEM
TQ-00-3520		HEIGHT AND REACH, 101' TILLER	1	KMEM
TQ-00-4000		MATERIAL STANDARDS, ALL DEVICES	1	KMEM
TQ-00-5080		100' & 101' LADDER, TILLER. HYDRAULIC SYSTEM	1	KMEM
TQ-00-5140		PARKER HOSE KIT - 2 JACK UNIT TDA	1	KMEM
TQ-00-6150		HYDRAULIC PUMP - PRESSURE COMPENSATED (TDA)	1	KMEM
TQ-00-7040		HYDRAULIC RESERVOIR - TDA	1	KMEM
TQ-00-7065		HYDRAULIC OIL - REGULAR - A/W 46 - 60 GAL	1	KMEM
TQ-00-7120		DIVERTER VALVE, TDA	1	KMEM
TQ-00-7240		ELECTRIC OUTRIGGER HYDRAULIC CONTROL VALVE - TDA, BANG BANG	1	KMEM
TQ-00-7480		ELECTRIC TURNTABLE HYDRAULIC CONTROL VALVE, TDA LADDERS	1	KMEM
TQ-00-7510		HYDRAULIC SYSTEM FILTRATION, TDA	1	KMEM
TQ-00-8580		TRACTOR DRAWN LADDER, "IQAN" MOTION CONTROL SYSTEM - ELECTRIC CONTROLS @ TT	1	KMEM
TQ-00-8700		HYDRAULIC PUMP PRESSURE - DISPLAY	1	KMEM
TQ-00-8710		ELEVATION ANGLE OF LADDER - DISPLAY	1	KMEM
TQ-00-8715		VERTICAL HEIGHT OF LADDER - DISPLAY	1	KMEM
TQ-00-8725		DEGREE OF ROTATION FROM VEHICLE CENTERLINE - DISPLAY	1	KMEM
TQ-00-8735		E-ZONE SHORT JACK WARNING - DISPLAY	1	KMEM
TQ-00-8740		CRADLE ALIGNMENT MESSAGE - DISPLAY	1	KMEM
TQ-00-8750		DEVICE LOAD MONITORING - DISPLAY	1	KMEM
TQ-00-8760		E-SPEED LADDER TIP SPEED CONTROL - DISPLAY	1	KMEM
TQ-00-8765		E-CUSH RAMP CONTROL FOR ELEVATION - DISPLAY	1	KMEM
TQ-00-8770		E-CUSH RAMP CONTROL FOR EXTENSION & RETRACTION - DISPLAY	1	KMEM
TQ-00-8890		WARNING MESSAGES - TURNTABLE ONLY	1	KMEM
TQ-00-9580		100' & 101' LADDER, TILLER. EMERG HYD. PUMP, EPU	1	KMEM
TQ-01-1010		PTO CONTROLS IN CAB FOR ALL TILLER AERIAL DEVICES	1	KMEM
TQ-01-1100		FAST IDLE CONTROL FOR ALL AERIAL DEVICES	1	KMEM
TQ-02-0315		101' LADDER, TILLER TORQUE BOX	1	KMEM
TQ-02-1315		101' LADDER, TILLER OUTRIGGERS, 16'	1	KMEM
TQ-02-1785		101' LADDER, TILLER OUTRIGGERS - HORIZONTAL CYLINDERS	1	KMEM
TQ-02-1985		101' LADDER, TILLER OUTRIGGERS - VERTICAL CYLINDERS	1	KMEM
TQ-02-2100		IQAN - OUTRIGGER STRING POTENTIOMETER - TWO (2) OUTRIGGERS	1	KMEM
TQ-02-2260		OVERSIZED OUTRIGGER/JACK FOOT PADS, TILLER DEVICES	1	KMEM
TQ-02-2500		OUTRIGGER INTERLOCK SYSTEM & ALARM, ALL DEVICES	1	KMEM
		****** HEADER - OUTRIGGER LIGHTING, TWO (2) OUTRIGGERS**	**1**	**KMEM**
TQ-02-5125		AKRON LED OUTRIGGER LAMPS, 2-OUTRIGGERS	1	KMEM
TQ-02-5205		LED OUTRIGGER GROUND LIGHTS - GROTE WHITELIGHT, 2-OUTRIGGERS	1	KMEM
TQ-02-5310		CODE 3 45 SERIES, LED LIGHTS ON (2) OUTRIGGER PANELS	1	KMEM
TQ-02-6005		OUTRIGGER WARNING LIGHT ACTIVATION, PRIMARY WARNING	1	KMEM
TQ-02-6830		OUTRIGGER SCOTCHLITE - DIAMOND GRADE, RED/YELLOW CHEVRON	1	KMEM
TQ-02-7520		100' & 101' LADDER, TILLER ELECTRIC OUTRIGGER CONTROLS	1	KMEM
TQ-02-9230		OUTRIGGER LEVEL SIDE TO SIDE, ALL TILLER DEVICES	1	KMEM
TQ-03-1650		101' LADDER, TILLER TURNTABLE	1	KMEM
TQ-03-3010		TURNTABLE DECK - ALUMINUM TREADPLATE	1	KMEM
TQ-03-3500		TDA NOTICE!!! TURNTABLE DECK	1	KMEM
TQ-04-1852		HEEL PIN STEP ON TURNTABLE, 79', 103', 109' & 123' & 100' M.M. LADDERS	1	KMEM
TQ-04-1855		TURNTABLE HANDRAILS, KNURLED ALUMINUM, 3-SIDES	1	KMEM
TQ-04-2145		HEEL PINS - 100' & 101' TDA	1	KMEM
TQ-04-2300		STAINLESS STEEL CRADLE ALIGNMENT ARROWS ON TURNTABLE	1	KMEM
TQ-04-2820		FIRE RESEARCH "MAN SAVER" BARS @ TURNTABLE OPENINGS	1	KMEM
TQ-04-7900		101' LADDER, TILLER TURNTABLE SWIVEL	1	KMEM
TQ-04-9000		IQAN - SWIVEL ROTATION ENCODER	1	KMEM
TQ-06-0750		101' LADDER, TILLER, LADDER CONSTRUCTION	1	KMEM
TQ-06-0900		STAINLESS STEEL EGRESS W/TIP SKID GAURDS	1	KMEM
TQ-06-2080		101' H.D. 4-SECTION TILLER, LADDER DIMENSIONS	1	KMEM

PART NO	S	DESCRIPTION	QTY	ID
TQ-06-3000		RUNG COVERS - PHOTOLUMINESCENT, ALL DEVICES	1	KMEM
TQ-06-4005		SINGLE PAIR FOLDING STEPS @ LADDER TIP	1	KMEM
TQ-06-4100		RED SCOTCHLITE MATERIAL ON LAST 6' OF LADDER TIP	1	KMEM
TQ-06-4200		4' FIRE HOOKS UNLIMITED PIKE POLE MOUNTED IN FLY SECTION OF LADDER	1	KMEM
TQ-06-4240	>	PIKE POLE MOUNTED ON LEFT SIDE OF FLY SECTION	1	KMEM
TQ-06-4250		6 LB. PICKHEAD AXE MOUNTED IN FLY SECTION, INCLUDES AXE	1	KMEM
TQ-06-4260	>	AXE MOUNTED ON LEFT SIDE OF FLY SECTION	1	KMEM
TQ-06-6500		RESCUE EYELET ON LAST RUNG OF LADDER TIP	1	KMEM
TQ-06-9000		AERIAL TRAVEL SUPPORT, ALL DEVICES	1	KMEM
TQ-06-9035		CRADLE ILLUMINATION LIGHTS - GROTE WHITELIGHT LED	1	KMEM
TQ-07-2100		101' LADDER, TILLER, ELEVATION SYSTEM	1	KMEM
TQ-07-2800		IQAN - INCLINOMETER	1	KMEM
TQ-07-2801		IQAN - MOMENT LOAD INDICATOR	1	KMEM
TQ-07-2805		IQAN - E-CUSH CONTROL, ELEVATION SYSTEM - LADDER	1	KMEM
TQ-08-2100		101' LADDER, TILLER, ROTATION SYSTEM	1	KMEM
TQ-08-2800		ROTATION MOTOR AND BRAKE - 41" EXTERNAL BEARINGS	1	KMEM
TQ-08-2950		SWING DRIVE ADJUSTMENT	1	KMEM
TQ-08-3000		IQAN - "E-SPEED" SAFETY SYSTEM, LADDERS	1	KMEM
TQ-08-3100		IQAN - "E-ZONE" ROTATION SAFETY SYSTEM, 2-OUTRIGGERS	1	KMEM
TQ-09-2100		101' LADDER, TILLER, EXTENSION/RETRACTION SYSTEM	1	KMEM
TQ-09-2350		EXTENSION CYLINDERS PAINTED LADDER PAINT COLOR	1	KMEM
TQ-09-2800		IQAN - EXTENSION SYSTEM STRING POTENTIOMETER	1	KMEM
TQ-09-2810		IQAN - "E-CUSH" EXTENSION/RETRACTION SYSTEM - LADDERS	1	KMEM
TQ-09-3048		LADDER SLIDE PADS, 100' & 101' LADDER	1	KMEM
		LADDER EXTENSION NUMBERS, ALL DEVICES	**1**	**KMEM**
TQ-09-3150		LADDER LEVEL INDICATOR (BASE SECTION) - LIGHTED	1	KMEM
TQ-09-3250		LADDER, CABLE/HOSE/WIRE ROUTING, 101' LADDER	1	KMEM
		****** HEADER - LADDER, 120 VOLT ELECTRICAL SYSTEM & ACCESSORIES**	**1**	**KMEM**
TQ-10-0100		LADDER, 120 VOLT ELECTRICAL SYSTEM	1	KMEM
TQ-10-0125		DELETE LADDER TIP RECEPTACLE	1	KMEM
		****** HEADER - LADDER, 12 VOLT ELECTRICAL SYSTEM & ACCESSORIES**	**1**	**KMEM**
TQ-10-1018		HEEL PIN STEP LIGHTS - TECNIQ EON 3 LED LIGHTS	1	KMEM
TQ-10-1040		TURNTABLE CONTROL CONSOLE LIGHTING - LUMA BAR LED H2O	1	KMEM
TQ-10-1060		TURNTABLE CONSOLE STEP LIGHT - TECNIQ EON 3 LED	1	KMEM
TQ-10-1110		TWO (2) UNITY SPOTS @ LADDER BASE SECTION	1	KMEM
TQ-10-1210		ONE (1) UNITY SPOT & ONE (1) FLOOD @ LADDER TIP	1	KMEM
TQ-12-0010		LADDER, CONTROL STATION	1	KMEM
TQ-12-0060		TDA LADDERS, CONSOLE LOCATED @ LH SIDE OF TURNTABLE, STD	1	KMEM
TQ-12-0085		PAINTED ALUMINUM TURNTABLE CONSOLE - MATCH LADDER COLOR	1	KMEM
TQ-12-2100		101' LADDER, TILLER TURNTABLE CONTROL STATION	1	KMEM
TQ-12-2520		FIRE RESEARCH INSIGHT FLOWMETER @ TURNTABLE CONSOLE	1	KMEM
TQ-12-2595		TURNTABLE CONSOLE COVER - PAINTED RADIUS	1	KMEM
TQ-14-1200		LADDER, FIRE RESEARCH ACT -2 WAY COMMUNICATION SYSTEM - LOWER CONTROL	1	KMEM
TQ-14-1205		LADDER, FIRE RESEARCH ACT 2-WAY COMMUNICATION SYSTEM - UPPER SPEAKER/MIC	1	KMEM
TQ-18-0800		101' LADDER, TILLER LADDER WATERWAY SYSTEM	1	KMEM
TQ-18-1420		101' LADDER, TILLER LADDER WATERWAY	1	KMEM
TQ-18-2520		4" HEEL PIN SWIVEL - 100'	1	KMEM
TQ-18-2600		AUTOMATIC WATER DRAIN/VENT	1	KMEM
TQ-18-3000		ALL DEVICES, WATERWAY RELIEF VALVE	1	KMEM
TQ-18-3025		TILLER AERIAL WATERWAY DRAIN, 1 1/2" VALVE	1	KMEM
TQ-18-3600		TILLERS, SIDE INLETS 4" NST ADAPTERS W/CAPS	1	KMEM
TQ-18-3810		INNOVATIVE CONTROLS 2 1/2" GAUGE FOR AERIAL INLET, TILLERS	1	KMEM
TQ-18-4130	>	LADDER, AKRON #3480 "STREAMMASTER II" MONITOR	1	KMEM
TQ-18-4210	>	LADDER, AKRON #5178 NOZZLE	1	KMEM
TQ-18-4300		LADDER, AKRON MONITOR CONTROLS W/ AUTO STOW	1	KMEM
TQ-18-4505		LADDER, ELECTRIC SELECTABLE WATERWAY TROLLEY - NEW	1	KMEM
TQ-18-4950		"STORE FRONT BLITZ" DESCRIPTION	1	KMEM

PART NO	S	DESCRIPTION	QTY	ID
TQ-20-2100		101' LADDER, TILLER LADDER CAPACITIES	1	KMEM
TQ-50-0100		FIRE DEPT AERIAL FAMILIARIZATION - PROVIDED BY FACTORY	1	KMEM
TQ-50-0140		FACTORY FAMILIARIZATION - FOUR (4) DAYS	1	KMEM
TQ-50-0600		AERIAL SERVICE, ALL DEVICES	1	KMEM
TQ-50-0700		WARNING DECALS, ALL DEVICES	1	KMEM
TQ-52-0100		AERIAL LADDER, MANUALS, TWO (2) SETS	1	KMEM
TQ-70-2100		101' LADDER, TILLER CERT. & TESTING	1	KMEM
		****** HEADER - PAINT SECTION - ALL UNITS ******	**1**	**KMEM**
UA-00-1100		GENERAL PAINT DESCRIPTION - ALL	1	KMEM
UA-00-1205		GENERAL PRIMER & PREP DESCRIPTION - TDA	1	KMEM
UA-00-1405		GENERAL FINISH PAINT DESCRIPTION - TDA	1	KMEM
UA-00-2705		BODY BUFFING & FINISH - TDA	1	KMEM
		****** HEADER - TDA BODY PAINT ******	**1**	**KMEM**
UA-03-0205		INSIDE/UNDERSIDE BODY PAINTED JOB COLOR - TDA	1	KMEM
UA-03-0405		CMPT INT W/ MULTISPEC, WHITE MARBLE STONE - TDA	1	KMEM
UA-03-0905		SINGLE COLOR BODY PAINT SCHEME - TDA	1	KMEM
UA-03-2205		PUMPHOUSE & PLUMBING PAINTED JOB COLOR - TDA	1	KMEM
		****** HEADER - SINGLE AXLE CUSTOM CHASSIS PAINT (AERIAL)**	**1**	**KMEM**
UA-05-0050		CUSTOM CAB PRIMER & PREP	1	KMEM
UA-05-0070		CUSTOM FINISH PAINT & PREP	1	KMEM
UA-05-0200		TWO TONE CUSTOM CAB PAINT SCHEME	1	KMEM
UA-05-0350		CUSTOM CAB BUFFING & FINISH	1	KMEM
UA-05-0360		CUSTOM CAB INTERIOR PAINT - TEXTURED GRAY	1	KMEM
UA-05-0405		CUSTOM CHASSIS JOB COLOR FRAME RAILS	1	KMEM
UA-05-0500		CUSTOM CHASSIS WHEEL AND HUB PAINT - SINGLE AXLE	1	KMEM
UA-06-0200		LADDER, PAINTING, ALL DEVICES, WHITE #91528	1	KMEM
UA-06-0450		EXTENSION CYLINDERS PAINTED TO MATCH LADDER COLOR	1	KMEM
UA-06-0900		TORQUEBOX PAINT - JOB COLOR	1	KMEM
UA-06-1100		OUTRIGER PAINT - SILVER URETHABOND 104	1	KMEM
UA-06-1205		TURNTABLE PAINT - LADDER COLOR	1	KMEM
UA-06-1215		TURNTABLE CONSOLE PAINT - LADDER COLOR	1	KMEM
UA-06-1225		LIFT CYLINDERS CONSOLE PAINT - LADDER COLOR	1	KMEM
UA-06-1500		LADDER RUST INHIBITOR - ALL DEVICES	1	KMEM
UA-06-2120	>	PAINT CODES, TWO-TONE COLORS, FILL IN BLANKS	1	KMEM
UA-06-2130		PAINT CODES, AERIAL DEVICE - WHITE #91528	1	KMEM
UA-06-2200		PINT OF TOUCH-UP PAINT	1	KMEM
UA-06-2515		FINALIZATION & DETAILING - TDA	1	KMEM
UA-06-2850		RUSTPROOFING WARRANTY, TEN (10) YEAR	1	KMEM
		****** HEADER, LETTERING & STRIPING - 100-TDA**	**1**	**KMEM**
UA-12-0100		COMPUTER GENERATED LETTERING	1	KMEM
UA-12-1220		GOLDLEAF W/ DUAL DROP SHADOW LETTERING ON FRONT CAB DOORS	1	KMEM
UA-12-1245		3" LETTERING ON FRONT CAB DOORS	1	KMEM
UA-12-1760		GOLDLEAF W/ DUAL DROP SHADOW LETTERING ON CREW CAB DOORS	1	KMEM
UA-12-1785		3" LETTERING ON CREW CAB DOORS	1	KMEM
UA-12-2720		GOLDLEAF W/ DUAL DROP SHADOW LETTERING ON FRONT OF CAB	1	KMEM
UA-12-2745		3" LETTERING ON FRONT OF CAB	1	KMEM
UA-12-3120		GOLDLEAF W/ DUAL DROP SHADOW LETTERING ON CAB SIDE PANEL	1	KMEM
UA-12-3145		3" LETTERING ON CAB SIDE PANEL	1	KMEM
UA-12-3720		GOLDLEAF W/ DUAL DROP SHADOW LETTERING ON REAR BODY PANEL	1	KMEM
UA-12-3745		3" LETTERING ON REAR BODY	1	KMEM
UA-13-0100		LETTERING FONT - BASIC BLOCK TYPE FONT	1	KMEM
UA-14-1310		LARGE CUSTOM FIRE DEPARTMENT LOGO	1	KMEM
UA-14-1320		SCOTCH-LITE W/ TWO COLORS - LARGE LOGO	1	KMEM
UA-14-1335	>	LOCATION - LARGE CUSTOM LOGO	1	KMEM
UA-16-1000		ACCENT STRIPING & SCROLL OPTIONS	1	KMEM
UA-16-1200		1/2" ACCENT STRIPE ON BODY UPPER & LOWER AREAS OF BODY	1	KMEM
UA-16-1210		GOLD LEAF ACCENT MATERIAL - UPPER & LOWER AREAS OF BODY	1	KMEM
UA-16-1500		1/2" ACCENT STRIPE ON CAB PAINT BREAK LINE	1	KMEM
UA-16-1510		GOLD LEAF ACCENT MATERIAL - CAB PAINT BREAK LINE	1	KMEM
UA-20-0100		19" X 144" LETTERING PANELS ON BASE SECTION	1	KMEM

PART NO	S		DESCRIPTION	QTY	ID
UA-20-0200			SIGN PANELS TO PAINTED TO MATCH AERIAL DEVICE COLOR	1	KMEM
UA-20-0520			SCOTCH-LITE W/ DROP SHADOW LETTERING FOR AERIAL	1	KMEM
UA-50-0300			NFPA REQUIRED SCOTCH-LITE STRIPINGSTRIPING - TDA AERIAL	1	KMEM
UA-50-0320			8" SCOTCH-LITE STRIPE ON CAB AND BODY - TDA AERIAL	1	KMEM
UA-58-5100			WHITE SCOTCH-LITE	1	KMEM
UA-80-6000			REAR CHEVRON STRIPING	1	KMEM
UA-80-6002			50% VERTICAL SURFACE	1	KMEM
UA-80-6030			6" REAR SCOTCH-LITE CHEVRON STRIPING	1	KMEM
UA-80-6070			RUBY RED & LEMON YELLOW SCOTCH-LITE	1	KMEM
			****** PROPOSED - AERIAL WARRANTY PKG, W/PUMP @ REAR OF SPEC**	**1**	**KMEM**
W6-00-000J			PROPOSED - KME WARRANTY, STARTING ON DELIVERY DATE	1	KMEM
W6-00-0010	**X**	<	PROPOSED - 5 YEAR FCAM WARRANTY - CUSTOM CHASSIS	1	
			$19,500 per email Phil to Byron 9-27-16		
W6-00-003M		>	PROPOSED - 5 YEAR WARRANTY - BASE WITH CUSTOM CHASSIS	1	KMEM
W6-00-0150			PROPOSED - 5 YEAR CUMMINS BASE WARRANTY	1	KMEM
W6-00-0210			PROPOSED - 5 YEAR ALLISON EVS TRANSMISSION WARRANTY	1	KMEM
W6-00-0220			PROPOSED - 3 YEAR COOLING SYSTEM WARRANTY - CUSTOM	1	KMEM
W6-00-0230			PROPOSED - LIFETIME FRAMERAIL WARRANTY	1	KMEM
W6-00-0242			PROPOSED - SHEPPARD STEERING GEAR STANDARD - THREE YEAR WARRANTY	1	KMEM
W6-00-0254			PROPOSED - 5 YEAR MERITOR FRONT AXLE - WARRANTY	1	KMEM
W6-00-0258			PROPOSED - 5 YEAR MERITOR SINGLE AXLE REAR - WARRANTY	1	KMEM
W6-00-0270			PROPOSED - 3 YEAR MERITOR ABS - WARRANTY	1	KMEM
W6-00-0320		>	PROPOSED - 10 YEAR CAB STRUCTURAL WARRANTY	1	KMEM
W6-00-0330			PROPOSED - 10 YEAR BODY STRUCTURAL WARRANTY	1	KMEM
W6-00-0390			PROPOSED - 10 YEAR CAB & BODY CORROSION WARRANTY	1	KMEM
W6-00-0410			PROPOSED - 10 YEAR BODY CORROSION WARRANTY, USE W/COMM CHASS	1	KMEM
W6-00-0450			PROPOSED - PAINT FINISH WARRANTY, TEN (10) YEAR	1	KMEM
W6-00-0470			PROPOSED - 5 YEAR LETTERING WARRANTY	1	KMEM
W6-00-0483			PROPOSED - 1 YEAR BRIGHTWORK WARRANTY	1	KMEM
W6-00-0490			PROPOSED - 10 YEAR STAINLESS STEEL PIPING WARRANTY	1	KMEM
W6-00-0530			PROPOSED - REAR SUSPENSION - HENDRICKSON AIR RIDE - SGL AXLE -THREE YEAR WARRANT	1	KMEM
W6-00-0570			PROPOSED - SAFEGUARD TECHNOLOGY - 10 YEAR - RUNG COVERS	1	KMEM
W6-00-0590			PROPOSED - 20 YEAR AERIAL LADDER WARRANTY	1	KMEM
W6-00-0630		>	PROPOSED - FIVE (5) YEAR AERIAL WATERWAY SWIVEL WARRANTY - AMITY	1	KMEM
W6-00-0650		>	PROPOSED - TEN 10 YEAR AERIAL WATERWAY WARRANTY - AMITY	1	KMEM
W6-00-0710			PROPOSED - LIFETIME POLY TANK WARRANTY - ALL TANKS	1	KMEM
W6-00-0820			PROPOSED - WATEROUS 5 YEAR PUMP WARRANTY (PARTS & LABOR)	1	KMEM
W6-00-0823	**X**		WATEROUS FCAM 5YR WARRANTY CORRECTION	1	
W6-00-1153	**S**		DEALER PROVIDES WARRANTY TRANSPORT PROP and REQ	1	DLR
W6-00-1330			PROPOSED - AKRON - 5 YEAR LIMITED WARRANTY	1	KMEM
W6-00-1340			PROPOSED - AKRON HEAVY DUTY VALVE - 10 YEAR WARRANTY	1	KMEM
W6-00-1530			PROPOSED - USSC SEATING 6 YEAR WARRANTY	1	KMEM
WA-00-0010			"AERIAL FIRE APPARATUS" NFPA 2016 STATEMENT OF EXCEPTIONS	1	KMEM

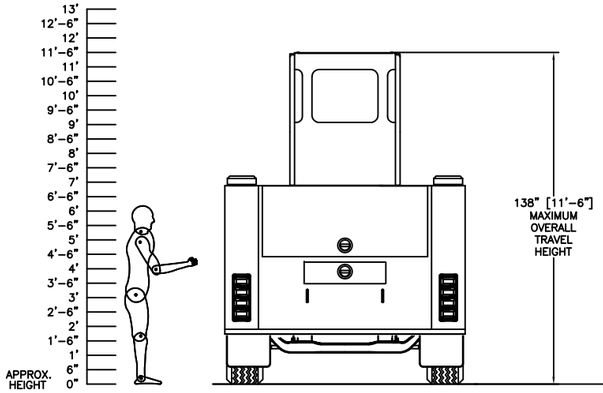

REAR VIEW

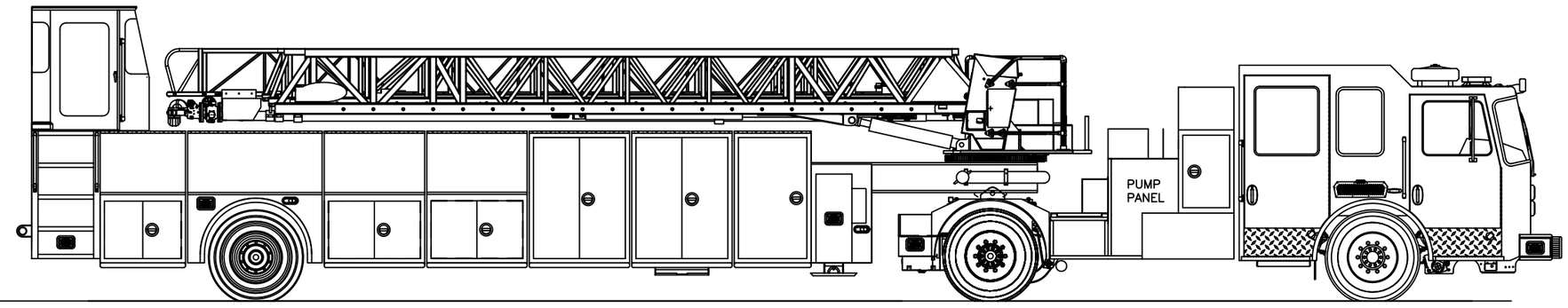

OFFICERS SIDE VIEW

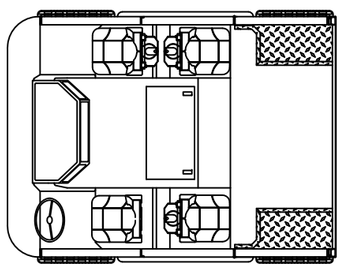

CAB INTERIOR LAYOUT

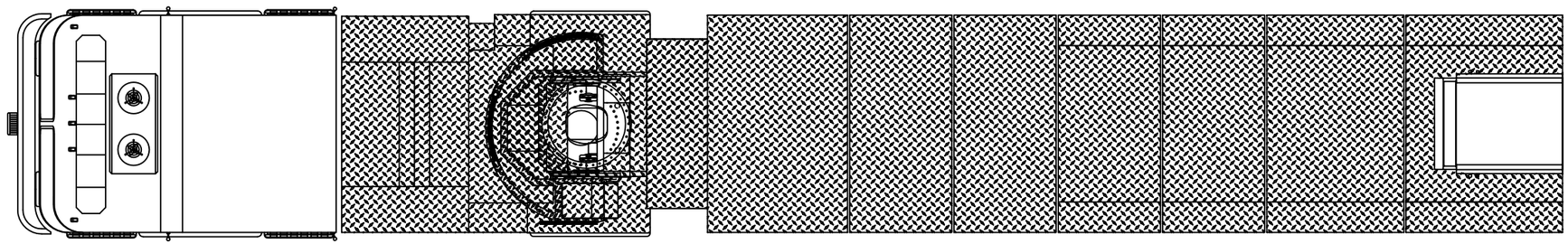

TOP VIEW

FRONT VIEW

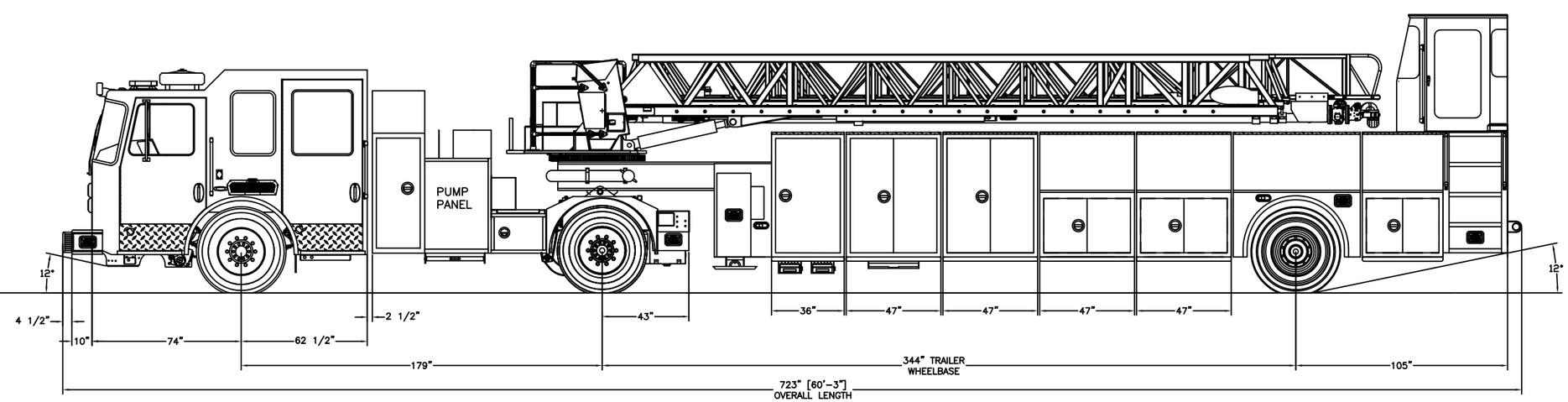

DRIVERS SIDE VIEW

SPECIFICATIONS

CHASSIS: PREDATOR MFD w/ 10" RAISED ROOF
ENGINE: CUMMINS ISX 15 500 HP w/ ENGINE BRAKE
TRANSMISSION: ALLISON 4000EVS 5-SPEED AUTOMATIC
FRONT AXLE: MERITOR MFS-20-133A-N; #21,500
DRIVE AXLE: MERITOR RS-30-185; #31,000
TRAILER AXLE: MERITOR MFS-20-133A-N; #23,000
PUMP: WATEROUS S100; 2,000 GPM SINGLE STAGE PUMP
TANK: 250 GALLONS

NOTES

THIS DRAWING IS A GENERAL CONFIGURATION AND MAY NOT NECESSARILY REFLECT ALL CONTRACTUAL OBLIGATIONS

CUSTOMER APPROVAL

NAME:

TITLE:

DATE:

SYM	DATE	REVISION DESCRIPTION	APP'D

SALES ENGINEER :

DIMENSIONS ARE APPROXIMATE & MAY VARY DUE TO BUILD ADJUSTMENTS

SCALE	DWG SIZE	DRAWN BY	DATE
3/8"=1'	D	Z.ZSCHUNKE	9-26-16
		APPROVED BY P.HOHERCHAK	

101' TRACTOR DRAWN LADDER

MAPC 10 HIGH END

PROPOSAL DRAWING

KME FIRE GROUP

KOVATCH MOBILE EQUIPMENT
ONE INDUSTRIAL COMPLEX - NESQUEHONING, PA 18240

KME

FCAM MID RANGE

SINGLE REAR AXLE

REAR MOUNT 79 FOOT

AERIAL LADDER “QUINT”

MAPC 11

Quote SO

MAPC/FCAM	MAPC 11 MID RANGE 79' REAR MOUNT AERIAL QUIN

Sales Rep:

Terms:

Drawing #:
Est. Delivery Date: / /
Customer PO #:
Customer #:
QPF #:

Penalty:

Quote No: 10087-0011
10/04/2016

PART NO	S	DESCRIPTION	QTY	ID
		== REAR MOUNT LADDER - 713.016 07/13/16 ==	**1**	**KMEM**
		== LETTERING & STRIPING, 79' SA - 713.016 07/13/16 ==	**1**	**KMEM**
		== COMPARTMENT ACCESSORIES REARMOUNT AERIAL - 713.016 07/13/16 ==	**1**	**KMEM**
		== MISC AND LOOSE EQUIPMENT (AERIAL) - 713.016 07/13/16 ==	**1**	**KMEM**
		== AERIAL WARRANTY PACKAGE W/PUMP - 713.016 07/13/16 ==	**1**	**KMEM**
		DEALER ======= DEALER ======= DEALER	**1**	**DLR**
		QUOTE DATA VERSION: 0713.016 - 2016 DATA SET	**1**	**KMEM**
		INDEX OF PART NUMBERS	**1**	**KMEM**
		****** HEADER - CONTRACTS, PROPOSAL FORM, ETC @ FRONT OF SPECS**	**1**	**KMEM**
		****** PROPOSED - AERIAL SPEC BOILERPLATE**	**1**	**KMEM**
04-00-0000		PROPOSED - GENERAL INFORMATION - NFPA 1901	1	KMEM
04-00-0033		PROPOSED - COMPLETION INFO	1	KMEM
04-00-0040		PROPOSED - FMVSS CERTIFICATION	1	KMEM
04-00-0060		PROPOSED - RECORDS	1	KMEM
04-00-0107		PROPOSED - GENERAL CONSTRUCTION - AERIAL	1	KMEM
04-00-0120		PROPOSED - SINGLE LINE RESPONSIBILITY	1	KMEM
04-00-0130		PROPOSED - PRODUCT LIABILITY - $30,000,000.00	1	KMEM
04-00-0170		PROPOSED - CRITERIA & CODE CONFORMANCE - AERIAL	1	KMEM
04-00-0193		PROPOSED - PAINT PERFORMANCE CERTIFICATION	1	KMEM
04-00-0200		PROPOSED - AFTERMARKET SUPPORT WEBSITE	1	DLR
04-00-0490		PROPOSED - PRICES & PAYMENTS	1	KMEM
04-00-0540		PROPOSED - BOND REQUIREMENTS	1	KMEM
04-00-0560		PROPOSED - PERFORMANCE BOND	1	KMEM
04-00-0573		PROPOSED - FAIR, ETHICAL AND LEGAL COMPETITION	1	KMEM
04-00-0580		PROPOSED - NON-COLLUSION AGREEMENT	1	KMEM
04-00-0630		PROPOSED - MATERIAL & WORKMANSHIP	1	KMEM
04-00-0660		PROPOSED - CONTRACT SPECIALIST	1	KMEM
04-00-0680		PROPOSED - APPROVAL DRAWING	1	KMEM
04-00-1200		PROPOSED - DELIVERY	1	KMEM
04-00-1215		PROPOSED - INSTRUCTION MANUALS, TWO (2) SETS - CD	1	KMEM
04-00-1215	**X**	POWERPOINT DELIVERY - PROPOSAL FCAM AERIAL	1	
04-00-1300		PROPOSED - VEHICLE FLUIDS PLATE	1	KMEM

PART NO	S	DESCRIPTION	QTY	ID
04-00-1500		PROPOSED - MANUFACTURE GENERATED EXACT BLUEPRINT WITH BID	1	KMEM
04-00-1521	X	PROPOSED - KME and BULLDOG FAMA MEMBERSHIP	1	
04-00-1540		PROPOSED - MANUFACTURED IN THE UNITED STATES	1	KMEM
04-00-1550		PROPOSED - ISO 9001 QUALITY MANAGEMENT SYSTEM	1	KMEM
04-00-1570		PROPOSED - NFPA TREAD PLATE CERTIFICATION	1	KMEM
04-00-1605		PROPOSED - AMP DRAW REPORT	1	KMEM
04-00-2445		PROPOSED - UNDERWRITERS LABORATORIES (UL) TESTING - FCAM	1	DLR
07-00-0015		"AERIAL FIRE APPARATUS" NFPA 2016 CHAPTERS OF COMPLIANCE	1	KMEM
08-00-0000		VEHICLE DATA PLATE DESCRIPTION	1	KMEM
14-00-0000		NFPA ROLLOVER STABILITY GENERAL STATEMENT	1	KMEM
15-00-0010	>	PROPOSED - PRINCIPAL APPARATUS DIMENSIONS & GVWR	1	KMEM
15-00-0050		!!! CRITICAL OVERALL HEIGHT REQUIREMENT !!! - "NO"	1	KMEM
15-00-0150		!!! CRITICAL OVERALL LENGTH REQUIREMENT !!! - "NO"	1	KMEM
AA-00-002A		SERVICE CENTER - PROPOSAL FCAM	1	DLR
BA-00-0012		<1> 79-SA AERIALCAT LADDER	1	KMEM
BA-00-3000		SEAT AND SEAT BELT ANCHOR TESTING	1	KMEM
BA-02-0117		<2> PREDATOR - SINGLE AXLE - 79' RM	1	KMEM
BA-02-2007		<3> 138" TRAVEL HEIGHT - 79' SA	1	KMEM
BA-03-2020		<4> X-HI BODY, 79SA WITH PUMP	1	KMEM
BA-04-0505		AERIAL CHASSIS, REAR MOUNT PREDATOR -SINGLE AXLE (HEAVY)	1	KMEM
		****** HEADER - 100" PREDATOR CAB ******	**1**	**KMEM**
BA-04-0805		PREDATOR CAB - BASE, 100"	1	KMEM
BA-04-0850		PREDATOR CAB - BASE - ALUMINUM CONSTRUCTION	1	KMEM
BA-04-0990		PREDATOR 100" - CRASH TESTING	1	KMEM
BA-04-0995		PREDATOR 100" - 120,000# ROOF & SIDE TESTING	1	KMEM
BA-04-1300		PREDATOR 100" - MFD CAB LENGTH (DIM - 62 1/2")	1	KMEM
BA-04-1900		PREDATOR 100" - VISTA DIMENSIONS FRONT SEATING & ENGINE ENCLOSURE	1	KMEM
BA-04-4510		2010 - RM 10" RAISED ROOF 4" CENTER NOTCH & 2" WATERWAY NOTCH	1	KMEM
BA-05-0260		BATTERY ACCESS DOORS - REAR STEP WELLS, EACH SIDE	1	KMEM
BA-05-0610		BARRIER HEIGHT CAB DOORS, 100" PREDATOR "MFD, LFD & X-LFD"	1	KMEM
BA-05-0650		CAST ANTI-SLIP ENTRY STEPS FOR REDUCED LENGTH CAB DOORS	1	KMEM
BA-05-0700		CAB DOORS - BOLT ON WEATHER STRIP	1	KMEM
BA-05-1015		PREDATOR DOOR LATCHES, HD LOOP STYLE LATCH - BARRIER HEIGHT DOORS	1	KMEM
BA-05-1035		LOCKING CAB DOOR , OUT + IN, LOOP STYLE LATCH	1	KMEM
BA-05-1037		KEY MODEL #2001	1	KMEM
BA-05-1103		WINDOWS, MANUAL HAND CRANK STYLE - 100"	1	KMEM
BA-05-1130		DOOR WINDOW TRIM EXTRUSION, 4 - DOOR	1	KMEM
BA-05-1325		FULL HEIGHT INTERIOR DOOR PANELS - BRUSH ALUM, 4 - DOOR	1	KMEM
BA-05-1510		SCOTCHLITE MATERIAL ON INTERIOR OF DOOR PANEL 4-DOORS	1	KMEM
		****** HEADER - CAB EXTERIOR ACCESSORIES & OPT, 100" PREDATOR**	**1**	**KMEM**
BA-05-2410		WINDSHIELD, 100" PREDATOR CAB	1	KMEM
BA-05-2425		WINDSHIELD WIPERS & WASHERS - 100" PREDATOR	1	KMEM
BA-05-2450		SIDE VIEWING WINDOWS NON-SLIDING - PREDATOR	1	KMEM
BA-05-2500		DARK TINT WINDOWS, SIDE VIEWING, REAR DOORS & REAR WALL	1	KMEM
BA-05-2600		GRAB RAILS EXTERIOR, KNURLED ALUMINUM EXTRUSION	1	KMEM
BA-05-2668		PREDATOR INTERIOR GRAB HANDLES - WHEELABRATED	1	KMEM
BA-05-2692		INTERIOR "A" POST GRAB HANDLE "PREDATOR" - WHEELABRATED	1	KMEM
BA-05-2715		FRONT CAB GRILLE - FORMED STAINESS STEEL MIRROR FINISHED - 100" PREDATOR	1	KMEM
BA-05-2780		FRONT CAB GRILLE SCREEN - BLACK MESH - 100" PREDATOR/PANTHER	1	KMEM
BA-05-2815		SIDE CAB GRILLES - SHAPED BRIGHT FINISHED - 100" PREDATOR	1	KMEM
BA-05-2900		ALUMINUM CAB WHEEL LINERS	1	KMEM
BA-05-2910		ALUMINUM CAB FENDERETTES	1	KMEM
BA-05-3000		FRONT MUD FLAPS	1	KMEM
BA-05-3500		VELVAC MIRRORS " WEST COAST" HEATED / REMOTE - W/CONVEX SPOT	1	KMEM
BA-05-3690		MIRROR CONTROL IN MULTIPLEX CONTROL SCREEN	1	KMEM
BA-05-5115		INTERIOR TRIM, 100" PREDATOR	1	KMEM
BA-05-5180		CUSTOM CAB INTERIOR PAINT - TEXTURED GRAY	1	KMEM

PART NO	S	DESCRIPTION	QTY	ID
BA-05-5200		PREDATOR REAR INTERIOR CAB WALL, GRAY DURAWEAR UPHOLSTERY	1	KMEM
BA-05-5335		TREAD PLATE KICK PLATE ON LOWER INTERIOR REAR WALL	1	KMEM
BA-05-5530	>	STORAGE COMPARTMENTS UNDER FRONT SEATS - 100" PREDATOR	1	KMEM
BA-05-5610		BARYFOL FLOORING	1	KMEM
BA-05-5650		1" ACOUSTICAL INSULATION	1	KMEM
BA-05-5824		ENGINE ENCLOSURE 100" PREDATOR FAB DASH (DURAWEAR)	1	KMEM
BA-05-5860		ENGINE ENCLOSURE MATERIAL - ALUMINUM CAB	1	KMEM
BA-05-5890		REDUCED LENGTH ENGINE ENCLOSURE	1	KMEM
BA-05-7040		SUN VISORS, 100" PREDATOR CAB, PADDED VINYL	1	KMEM
BA-06-0400	>	DELETED - TOP ROLLOVER PROTECTION SYSTEM	1	KMEM
		****** HEADER - CAB SEATING & ACCESSORIES, 100" - PREDATOR MFD**	**1**	**KMEM**
		****** SEATING OPTIONS USSC, 100" - PREDATOR - MFD - NON ROLLTEK**	**1**	**KMEM**
BA-06-329H		DRIVERS SEAT, USSC AIR SUSPENSION, ABTS	1	KMEM
BA-06-389K		OFFICERS SEAT, USSC - FIXED BASE, SCBA, ABTS	1	KMEM
BA-06-3910		ZICO ULLH SCBA BOTTLE BRACKET - OFFICER'S SEAT	1	KMEM
		MFD CAB - REAR FACING USSC SEATS - NON ROLLTEK	**1**	**KMEM**
BA-06-414H		USSC SCBA ABTS REAR FACING, OUTBOARD, DS	1	KMEM
BA-06-4180		ZICO ULLH SCBA BOTTLE BRACKET - OUTBOARD, DS	1	KMEM
BA-06-424H		USSC SCBA ABTS REAR FACING, OUTBOARD, OS	1	KMEM
BA-06-4280		ZICO ULLH SCBA BOTTLE BRACKET - OUTBOARD, OS	1	KMEM
		MFD CAB - FORWARD FACING USSC SEATS - NON ROLLTEK	**1**	**KMEM**
BA-06-7200		**** DELETE FORWARD FACING SEAT RISER - NOT REQUIRED	1	KMEM
BA-06-8055		NO SCBA PARADE COVERS SUPPLIED	1	KMEM
BA-06-8150		USSC SEATING MATERIAL - BLACK CORDURA	1	KMEM
		****** HEADER - VEHICLE DATA RECORDER SYSTEMS**	**1**	**KMEM**
BA-06-9103	>	CLASS ONE SEAT BELT WARNING SYSTEM - UP TO 6 POSITIONS - ULTRAVIEW DISP	1	KMEM
BA-06-9115		FOUR (4) SEATING POSITIONS	1	KMEM
BA-06-9250	>	HELMET HOLDERS - IN CAB - ZICO	4	KMEM
BA-06-9310		CLASS ONE VEHICLE DATA RECORDER - MULTIPLEX	1	KMEM
		****** HEADER - CAB INTERIOR ACCESSORIES & OPTIONS, 100" PREDATOR**	**1**	**KMEM**
BA-07-7010	>	STANDARD #MATM RADIO ANTENNA INSTALLED	1	KMEM
		****** HEADER - INSTRUMENTATION & CONTROLS, 100" PREDATOR - NARROW VISTA**	**1**	**KMEM**
BA-08-0214		DASH & CENTER CONSOLE - 100" PREDATOR FAB DASH (UPHOLSTERED)	1	KMEM
BA-08-0275		INSTRUMENT PANEL, 100" PREDATOR - NARROW	1	KMEM
BA-08-0315		DIESEL EXHAUST FLUID LEVEL GAUGE	1	KMEM
BA-08-0320		ENGINE COMPRESSION BRAKE CONTROLS	1	KMEM
BA-08-0620		ULTRAVIEW 450 DISPLAY ON CAB DASH FOR ES-KEY SYSTEM	1	KMEM
BA-08-1220		INDICATOR CLUSTER, 100" PREDATOR	1	KMEM
BA-08-1235		"ATC DISABLED" INDICATOR CLUSTER	1	KMEM
BA-08-1240		"ATC ACTIVE" INDICATOR CLUSTER	1	KMEM
BA-08-1265		"OUTRIGGERS NOT STOWED" INDICATOR ON DASH	1	KMEM
BA-08-1800		LOWER RIGHT AUXILIARY SWITCH PANEL - PREDATOR - FAB	1	KMEM
BA-08-1900		PUMP SHIFT CONTROL ON LOWER LEFT DASH PANEL	1	KMEM
BA-08-1950		MULTIPLEX CONTROL PUMP SHIFT SWITCH - MULTIPLEX	1	KMEM
BA-08-2000		AERIAL LADDER, LADDER POWER/PTO SWITCHES IN CAB	1	KMEM
BA-08-2750		PREDATOR COMPUTER TERMINAL IN FRONT OF OFFICER (FABRICATED)	1	KMEM
BA-08-2905		OVERHEAD ABS PANEL, FLAT FACED, 100" PREDATOR	1	KMEM
BA-08-4405		RM HEATER/ DEFROSTER & ACCESS, PREDATOR 10" RR W/TWO NOTCH	1	KMEM
BA-08-6900		HVAC CONTROL SYSTEM - INCOPORATED INTO MULTIPLEX CONTROL DISPLAY	1	KMEM
BA-08-9000		CAB TILT SYSTEM & OPTIONS	1	KMEM
BA-08-9010	>	AUXILIARY - MANUAL CAB LIFT BACKUP SYSTEM	1	KMEM
BA-08-9110		PARKING BRAKE/CAB TILT INTERLOCK	1	KMEM
		FRAME & AXLE PACKAGE, SINGLE AXLE CHASSIS (HEAVY)	**1**	**KMEM**
BA-09-5100	>	110,000 PSI FRAME: STD MAIN RAIL WITH FULL LENGTH LINER	1	KMEM
		HEADER - FRONT BUMPER, EXTENSIONS & ACCESSORIES	**1**	**KMEM**
BA-10-0057	>	BUMPER 12" PAINTED 3/8" STEEL BUMPER - ALL CABS	1	KMEM
BA-10-0110		10" FRONT BUMPER EXTENSION WITH TREAD PLATE GRAVEL SHIELD	1	KMEM

PART NO	S	DESCRIPTION	QTY	ID
BA-10-0405		TREADPLATE GRAVEL SHIELD STANDARD INSTALLATION	1	KMEM
BA-10-2010		TWO (2) PAINTED TOW HOOKS BELOW FRONT BUMPER	1	KMEM
BA-10-5000		AERIAL TRAVEL SUPPORT FOR ANY REAR MOUNT TYPE AERIAL	1	KMEM
BA-14-0170		23,000# FRONT AXLE MERITOR MFS-20-133A-N	1	KMEM
BA-14-1110		MERITOR, EX-225 17" DISC BRAKES, FRONT AXLE, W/ AUTO SLACK ADJUSTMENT	1	KMEM
BA-14-2040		SUSPENSION FRONT - 23,000# AXLES	1	KMEM
BA-14-2095		**AERIAL DEVICE TRAVEL HEIGHT CRITICAL!!!! ** REQUIRES SMALL AXLE SPACER	1	KMEM
BA-14-2110		FRONT AXLE SHOCK ABSORBERS - MONROE "MAGNUM - 70"	1	KMEM
BA-14-5150		33,500# REAR AXLE MERITOR RS-30-185	1	KMEM
BA-14-6515		16.5" X 8.6" S-CAM BRAKES - MERITOR REAR AXLE, W/ AUTO SLACK	1	KMEM
BA-15-2810		VEHICLE TOP SPEED - 2016 NFPA STATEMENT	1	KMEM
BA-15-4435	>	SPRING REAR SUSPENSION, SINGLE REAR AXLE (33,500#)	1	KMEM
BA-15-4900	>	REAR SHOCK ABSORBERS - MONROE "MAGNUM" SERIES	1	KMEM
		****** HEADER - BRAKE SYSTEM, SINGLE AXLE VEHICLE**	**1**	**KMEM**
BA-20-1000		BRAKE SYSTEM, SA CHASSIS	1	KMEM
BA-20-1100		ABS BRAKING FOR SINGLE REAR AXLE CHASSIS	1	KMEM
BA-20-1270	>	ELECTRONIC STABILITY CONTROL (ESC) WITH (ATC) - CUSTOM SA	1	KMEM
BA-20-1500		AIR RESERVOIRS 4700 CU IN SA, BASE	1	KMEM
BA-20-2025		1/4 TURN DRAIN VALVES ON ALL AIR TANKS	1	KMEM
BA-20-3000		AIR DRYER, HEATED - BENDIX AD-9 12VOLT	1	KMEM
BA-20-5000		COLOR CODED SYNFLEX BRAKE LINES W/QUICK RELEASE FITTINGS - SA	1	KMEM
BA-20-5500		AIR COMPRESSOR -WABCO 18.7 CFM- STD. FOR ALL CUMMINS ENGINES	1	KMEM
BA-20-5810		BRAKE TREADLE VALVE	1	KMEM
BA-20-6010		PARKING BRAKE CONTROL - NEAR DRIVER - ALL WHEEL LOCK	1	KMEM
		HEADER, TIRE AND WHEEL OPTIONS	**1**	**KMEM**
		HEADER, WHEELS, 23,000 FRONT AXLE - ALUMINUM	**1**	**KMEM**
BA-25-1010		FRONT WHEELS, MILL ALUMINUM DISC TYPE - PAINTED 22.5 X 13, 24,390#	1	KMEM
BA-25-1020		FRONT WHEELS, LUG AND HUB TRIM (MILL ALUM WHEELS)	1	KMEM
BA-25-2030	>	FRONT, GOODYEAR 425/65R22.5 L 24,400# G296 MSA MIXED - 68MPH	1	KMEM
BA-25-2400		GOODYEAR - FIRE SERVICE RATING - TIRE RESTRICTIONS	1	KMEM
		HEADER, TIRES & WHEELS, 33,000 - 33,500 SINGLE REAR AXLE	**1**	**KMEM**
BA-25-5010	>	REAR WHEELS, STEEL DISC TYPE, 22.5 X 9, SA	1	KMEM
BA-25-5035		REAR WHEELS, LUG AND HUB TRIM, SA (STEEL)	1	KMEM
BA-25-6080	>	REAR, GDYR 315/80R22.5 L 35,400# G291 HIGHWAY - 68MPH, SA	1	KMEM
BA-25-7400		GOODYEAR - FIRE SERVICE RATING - TIRE RESTRICTIONS	1	KMEM
BA-25-9900		TIRE PRESSURE MONITORING - LED VALVE STEM CAPS - SIX TIRES	1	KMEM
		100" PREDATOR - ENGINE PACKAGE, SINGLE AXLE CHASSIS	**1**	**KMEM**
		****** 100" - HEADER, ENGINE & ENGINE COMPONENTS**	**1**	**KMEM**
BA-30-3120	>	CUMMINS ISL9 400 HP @ 2200 RPM, TQ 1250 lb-ft @ 1400 - PREDATOR NARROW	1	KMEM
BA-30-9810		PROPOSED - ENGINE CERTIFICATION CUSTOM CHASSIS	1	KMEM
BA-32-0035		COOLING/RADIATOR, 100" PREDATOR - NARROW	1	KMEM
BA-32-0070		ENGINE COOLANT FILTER - CUMMINS ISC - ISX	1	KMEM
BA-32-0085		COOLING SYSTEM CRITERIA	1	KMEM
BA-32-0100		TRANSMISSION COOLER	1	KMEM
BA-32-0120		RADIATOR SKID PLATE	1	KMEM
BA-32-0160		CHARGED AIR COOLER (FRONT MOUNT)	1	KMEM
BA-32-0240		COOLANT FAN, W/CLUTCH - CUMMINS ISC/ISL	1	KMEM
BA-32-0340		HEATER AND COOLANT HOSES/PIPING	1	KMEM
BA-32-0420		LOW COOLANT INDICATOR LIGHT AND ALARM IN CAB	1	KMEM
BA-33-0020	>	SECONDARY BRAKING - ENGINE COMPRESSION BRAKE	1	KMEM
BA-33-0150		FAST IDLE CONTROL FOR ALL ELECTRONIC ENGINES - SMART WHEEL	1	KMEM
BA-33-0160		ENGINE AIR CLEANER	1	KMEM
BA-33-0180		SPARK ARRESTOR	1	KMEM
BA-33-0200		ACCELERATOR PEDAL - FLOOR MOUNT	1	KMEM
BA-33-0250		REMOTE THROTTLE & INTERLOCK HARNESS	1	KMEM
BA-40-0100		ALLISON 3000EVS TRANS. - COMPRESSION BRAKE	1	KMEM
BA-40-0650		FIVE (5) SPEED AUTOMATIC TRANSMISSION - 3000 SERIES	1	KMEM

PART NO	S	DESCRIPTION	QTY	ID
BA-40-0700		ALLISON TRANSMISSIONS, ELECTRONIC TOUCH PAD SHIFTER IN CAB	1	KMEM
BA-40-0855		TRANSMISSION OIL LEVEL SENSOR	1	KMEM
BA-40-0860		ALLISON PARK TO NEUTRAL	1	KMEM
BA-40-0910		ALLISON PRESELECT PROGRAMMING	1	KMEM
BA-40-0920		PRESELECT PROGRAMMED FOR 4TH GEAR	1	KMEM
BA-40-4710		TES-389 TRANS FLUID 3000EVS TRANSMISSION	1	KMEM
BA-45-0100		DRIVE LINES DANA-SPICER #1710 SERIES	1	KMEM
BA-49-0100		DIESEL EXHAUST FLUID TANK - 5 GALLON	1	KMEM
BA-50-0110		EXHAUST SYSTEM - DPF & SCR SYSTEM - INLINE SYSTEM	1	KMEM
BA-50-0155		ALUMINIZED STEEL EXHAUST TAILPIPE/OUTLET OS - DPF + SCR SYSTEM	1	KMEM
BA-50-2500		FUEL SYSTEM	1	KMEM
BA-50-2505		FUEL TANK - 50 GALLON, STEEL	1	KMEM
BA-50-2625		FUEL LINES - FIBER REINFORCED HOSE	1	KMEM
BA-50-2645	>	CUMMINS FUEL-WATER SEPARATOR	1	KMEM
BA-50-2670		FUEL PUMP SECONDARY ELECTRIC, REQ. ON 210" W-B OR LONGER	1	KMEM
BA-50-2700		FUEL POCKET, LEFT SIDE REAR WHEEL WELL PANEL	1	KMEM
BA-50-5050	>	STEERING - DUAL SHEPPARD POWER STEERING GEARS	1	KMEM
BA-50-7115		STEERING COLUMN - CLOCK SPRING "NARROW"	1	KMEM
BA-50-7155		18" STEERING WHEEL - 4 SPOKE - "NARROW"	1	KMEM
BA-50-7170		SMART WHEEL CONTROLS ON STEERING WHEEL	1	KMEM
BA-50-9000		ROAD SAFETY KITS	1	KMEM
		****** HEADER, RM LADDER CHASSIS ELECTRICAL, 100" PREDATOR (OPTIONS)**	**1**	**KMEM**
		****** HEADER, RM LADDER W/ PUMP BODY ELECTRICAL (OPTIONS)**	**1**	**KMEM**
BE-01-0005		PREDATOR CHASSIS ELECTRICAL SYSTEM DESCRIPTION	1	KMEM
BE-01-0105		PREDATOR CHASSIS WIRING INSTALLATION	1	KMEM
BE-01-0150		DIRECT BATTERY GROUNDING STRAP - PREDATOR	1	KMEM
BE-01-0153		EMI/RFI PROTECTION	1	KMEM
BE-01-0205		PREDATOR 12 VOLT ELECTRICAL SYSTEM TESTING	1	KMEM
BE-05-0353		CLASS-1 ES-KEY MULTI-PLEXED ELECTRICAL SYSTEM 100" PREDATOR	1	KMEM
BE-05-0450		CLASS-1 ES-KEY ULTRAVIEW 450 DISPLAY	1	KMEM
BE-05-0800		INTER-LOCK MODULE FOR MULTIPLEX SYSTEM	1	KMEM
BE-05-0900		CHASSIS DIAGNOSTICS SYSTEM	1	KMEM
BE-05-1160		VOLTAGE MONITORING SYSTEM - 12 VOLT	1	KMEM
BE-05-1165		INDICATOR LIGHT AND ALARM PROVE-OUT SYSTEM	1	KMEM
BE-05-1170		SEQUENCER	1	KMEM
BE-05-1175		ELECTRICAL HARNESS INSTALLATION - 12 VOLT	1	KMEM
BE-10-0487		DELCO REMY 40SI, 320 AMP BRUSHLESS ALTERNATOR	1	KMEM
BE-15-0680		BATTERIES - FIVE (5) EXIDE GROUP 31, 925CCA	1	KMEM
BE-15-1105		PREDATOR BATTERY STORAGE, STEEL, MFD, XMFD, LFD, XLFD	1	KMEM
BE-15-1500		BATTERY DISCONNECT SWITCH, ALL UNITS	1	KMEM
BE-15-1555		COLE HERSEE BATTERY JUMPER STUDS, DS BATTERY BOX	1	KMEM
BE-20-1615		120 VOLT RECEPTACLE FOR ON-BOARD BATT. CHARGER - CUSTOM	1	KMEM
BE-20-1715		SHORELINE RECEPTACLE LABEL - NFPA	1	KMEM
BE-20-1750		SHORELINE LOCATION - ADJACENT TO DRIVER'S DOOR	1	KMEM
BE-20-2000		KUSSMAUL MODEL 1200, 40AMP, BATTERY CHARGER	1	KMEM
BE-30-0100		CONTROL SWITCHING - EATON MULTIPLEX SWITCHES - 12 ABOVE DRIVER	1	KMEM
BE-30-0120		CONTROL SWITCHING - EATON MULTIPLEX SWITCHES - 9 LOWER PANEL	1	KMEM
BE-30-2500		CONTROL SWITCHING LABELING	1	KMEM
BF-00-0515		WELDON #8080-8000-13 WHITE/RED LED INTERIOR LIGHTS (4)	1	KMEM
BF-00-5000		DOOR OPEN INDICATOR W/ INTEGRAL AUDIBLE ALARM	1	KMEM
		****** HEADER, 12V POWER/ USB CHARGING/ POWER - GROUND CIRCUITS, CUSTOM ******	**1**	**KMEM**
BF-01-6000		12 VOLT POWER AND GROUND CIRCUIT FOR ACCESSORIES IN DASH	1	KMEM
		****** HEADER, REAR/SIDE VISION CAMERA SYSTEMS ******	**1**	**KMEM**
BF-20-0000		DUAL HEADLIGHTS, HALOGEN, PREDATOR - DUAL BEZELS	1	KMEM
BF-20-0320		DAYTIME RUNNING LIGHTS, ALL CABS	1	KMEM
BG-00-0055		DUAL MODULE w/ CODE 3 65STA LED TURN SIGNAL & REQ WARN LIGHT	1	KMEM
BG-00-0400		CUST RM LADDER CHASSIS LED MARKER LIGHTS	1	KMEM
BG-00-0500		CUST RM LADDER BODY LED MARKER LIGHTS	1	KMEM

PART NO	S	DESCRIPTION	QTY	ID
BG-00-1210		WELDON #9186 LED MARKER LIGHTS @ FRONT ROOF EDGE OF CAB	1	KMEM
BG-00-1600		TRUCK-LITE MARKER LIGHTS @ EA SIDE OF CAB, ADJACENT TO DRIVER DOOR	1	KMEM
BG-00-1610		TRUCK-LITE MARKER/TURN LIGHTS @ EA SIDE OF BODY	1	KMEM
BG-00-1660		TRUCK-LITE MARKER LIGHTS @ REAR OF BODY	1	KMEM
BG-00-1800		TRUCK-LITE DOT AMBER REFLECTORS @ SIDE OF BODY	1	KMEM
BG-00-1810		TRUCK-LITE DOT RED REFLECTORS @ REAR OF BODY	1	KMEM
BG-00-2915		TECNIQ #L10 LED LICENSE PLATE LIGHT @ DS REAR OF BODY	1	KMEM
BG-02-2527		CODE 3, #65 LED BRAKE & TURN W/ HAL REVERSE TRI HOUSING	1	KMEM
BH-04-1050		CAB STEP LIGHTS, TECNIQ EON 3 LED, ALL DEVICES	4	KMEM
BH-04-1130		BODY STEP LIGHTS, TECNIQ EON 3 LED, ALL DEVICES	4	KMEM
BH-05-1625		DUNNAGE AREA LIGHTING, TECNIQ EON 3 LED	1	KMEM
BH-05-2300		AERIAL ACCESS LADDER ILLUMINATION - WHELEN 3" LED - RM BODY	1	KMEM
	>	****** HEADER, HOSE BED LIGHTING ******	**1**	**KMEM**
BH-06-0100		UNITY HOSE BED LIGHTS, ALL DEVICES	1	KMEM
BH-06-2200		HOSE BED WORK LIGHT - SWITCH	1	KMEM
		****** HEADER, SCENE LIGHTS - CUSTOM CHASSIS ******	**1**	**KMEM**
		****** HEADER, SCENE LIGHTS - LADDER/PLATFORM W/ PUMP**	**1**	**KMEM**
BH-11-0500		NFPA (4) JW SPEAKER LED RECTANGLE GROUND LIGHTS, BELOW CAB DOORS	1	KMEM
BH-11-0560		GROUND LIGHTS, 2 LED BELOW PUMP PANEL RUNNING BOARD - RH	1	KMEM
BH-11-0585		GROUND LIGHTS, 2 LED, AT REAR BODY CORNERS - RH	1	KMEM
BH-11-3750		CAB AND BODY GROUND LIGHTS ACTIVATE WITH PARKING BRAKE	1	KMEM
BH-11-3765		CAB AND BODY GROUND LIGHTS - SWITCH @ IN CAB	1	KMEM
		****** HEADER, BROW AND CAB RADIUS LIGHTS - CUSTOM CHASSIS**	**1**	**KMEM**
		****** HEADER, TELESCOPING LIGHTS, REAR OF CAB - CUSTOM CHASSIS**	**1**	**KMEM**
BI-00-0200		AERIAL BODY ELECTRICAL SYSTEM	1	KMEM
BI-00-0205		AERIAL BODY ELECTRICAL JUNCTION COMPARTMENT	1	KMEM
BI-00-0210		REAR-MOUNT, AERIAL DEVICE ELECTRICAL JUNCTION COMPARTMENT	1	KMEM
BI-00-0525		BODY ELECTRICAL HARNESS - ES-KEY	1	KMEM
BJ-00-5115		PUMP ENCLOSURE WORK LIGHTS - TECNIQ LED	1	KMEM
BJ-00-5165		ENGINE COMPARTMENT WORK LIGHTS - TECNIQ LED	1	KMEM
		COMPARTMENT LIGHTS - AERIAL SINGLE AXLE	**1**	**KMEM**
BJ-02-1055	>	COMPT. LIGHTS, TECNIQ E18 LED	7	KMEM
		****** HEADER, 12V BODY FLOOD LIGHTING - RM LAD/PLAT/WT W/ PUMP ******	**1**	**KMEM**
		****** CUSTOM REAR MOUNT AERIAL NFPA WARNING LIGHT PACKAGE**	**1**	**KMEM**
BL-95-0000		NFPA COMPLIANT WARNING LIGHT PACKAGE - ALL UNITS	1	KMEM
BL-95-0100		LIGHT PACKAGE ACTUATION/CONTROLS - ALL UNITS	1	KMEM
BL-98-0000		WARNING LIGHT FLASH PATTERN - NFPA FLASH PATTERN	1	KMEM
BM-00-0200		CODE 3 UPPER PACKAGE - CUSTOM REAR MOUNT AERIAL	1	KMEM
BM-02-0072		A-UPPER, CODE 3 LED 2718NFPA1, RX 2700 18" PRIZM II BAR PAIR	1	KMEM
BM-02-1000		C-UPPER, CODE 3 HALOGEN 550 BEACONS, RED DRIVER, AMBER OFFICER	1	KMEM
BM-02-2000		B/D-UPPER REAR, COVERED BY LIGHTS IN ZONE C-UPPER	1	KMEM
BM-02-3000		B/D-UPPER FRONT, COVERED BY LIGHTS IN ZONE A-UPPER	1	KMEM
BM-07-0200		CODE 3 LOWER PACKAGE - CUSTOM REAR MOUNT AERIAL	1	KMEM
BM-09-0018	>	A-LOWER FRONT, CODE 3 65 SERIES LED	1	KMEM
BM-09-0098		A-LOWER FRONT MOUNTING, CUSTOM CHASSIS	1	KMEM
BM-09-1014	>	C-LOWER REAR, CODE 3 65 SERIES LED	1	KMEM
BM-09-2006	>	B/D-LOWER FRONT, CODE 3 65 SERIES LED	1	KMEM
BM-09-2098		B/D-LOWER FRONT MOUNTING, CUSTOM CHASSIS	1	KMEM
BM-09-3006	>	B/D-LOWER MID, CODE 3 65 SERIES LED	1	KMEM
BM-09-3506	>	B/D-LOWER SECONDARY MID, CODE 3 65 SERIES LED	1	KMEM
BM-09-4006	>	B/D-LOWER REAR, CODE 3 65 SERIES LED	1	KMEM
BM-15-0000		LIGHT PACKAGE NFPA CERTIFICATION - ALL UNITS	1	KMEM
		****** HEADER, OPTIONAL WARNING LIGHTS**	**1**	**KMEM**
		****** HEADER, AUDIBLE WARNING & COMMUNICATION EQUIPMENT**	**1**	**KMEM**
BW-00-0510		CHASSIS SINGLE ELECTRIC (DOT) HORN	1	KMEM
BW-00-0560		CODE 3, #CA278, BACK-UP ALARM - 87DBA	1	KMEM
BW-00-5000	>	DUAL CHROME AIR HORNS	1	KMEM
BW-00-5100		DUAL AIR HORNS RECESSED IN FRONT BUMPER, STD	1	KMEM

PART NO	S	DESCRIPTION	QTY	ID
BW-00-5200		AIR HORN CTRL - FOOT FOR OFFICER & STEERING WHEEL FOR DRIVER	1	KMEM
BW-01-0120		SIREN, WHELEN # 295HFS2, 100W - FLUSH MOUNT	1	KMEM
BW-01-1020		ONE (1) WHELEN SA315P SPEAKER	1	KMEM
		****** HEADER, PUMP, TANK & ACCESSORIES, 79' SA RM, X-HI-BODY**	**1**	**KMEM**
DC-00-2340		WATEROUS CSU-C20-1750 SINGLE STAGE PUMP	1	KMEM
DC-01-4600		WATEROUS PUMP PACKING	1	KMEM
DC-01-6210		WATEROUS "C20" PUMP DRIVE UNIT, ALL WATEROUS MID-SHIP PUMPS	1	KMEM
DC-01-6490		PUMP RATIO (HALE, WATEROUS OR DARLEY)	1	KMEM
DC-01-7140		WATEROUS AIR SHIFT	1	KMEM
DC-01-8590		PUMP SHIFT MANUAL OVERRIDE (HALE, WATEROUS OR DARLEY)	1	KMEM
DC-01-8615		WATEROUS PUMP SHIFT INDICATOR LIGHTS	1	KMEM
DC-01-9020		TRANSMISSION LOCK-UP (HALE, WATEROUS OR DARLEY)	1	KMEM
DC-02-1900		PUMP MOUNTS - MID-SHIP PUMPS	1	KMEM
DC-02-1990		PUMP INSTALLATION - CUSTOM	1	KMEM
		****** HEADER, WATEROUS CSU, CMU, PRESSURE CONTROL**	**1**	**KMEM**
DC-05-1225		FIRE RESEARCH "IN CONTROL" TGA-300 PRESSURE GOVERNOR	1	KMEM
DC-05-1295		TASK FORCE TIPS #A18 SERIES INTAKE RELIEF VALVE	1	KMEM
DC-05-2500		PUMP UL CERTIFICATION - 750 GPM & UP	1	KMEM
		WATEROUS, PUMP PRIMING PUMP AND CONTROLS	**1**	**KMEM**
DC-05-3680	>	TRIDENT "MANUAL" AIR PRIMING SYSTEM	1	KMEM
		WATEROUS, DRAINS & ACCESSORES	**1**	**KMEM**
DC-05-5110		ROTARY MASTER DRAIN VALVE	1	KMEM
DC-05-5400		DRAINS/BLEEDER "INNOVATIVE CONTROLS" LIFT UP @ ALL 1-1/2" OR LARGER	1	KMEM
DC-05-5500		SYNFLEX SUCTION, DISCHARGE, PRESSURE AND CONTROL LINES	1	KMEM
DC-05-6220		WATEROUS ANODE BLOCKS - 2 TOTAL	1	KMEM
DC-10-2001		SIDE MOUNT PUMP MODULE, SA, RM AERIAL	1	KMEM
DC-10-2500		PUMP MODULE - STEEL CONSTRUCTION	1	KMEM
DC-10-3310		ONE (1) HADES 20K BTU HOT WATER HEATER FOR PUMP ENCLOSURE	1	KMEM
		****** HEADER, SUCTIONS - REARMOUNT SA, SIDE MOUNT**	**1**	**KMEM**
DC-14-3220		WATEROUS MAIN SUCTION INLETS 6" NST, 1750 GPM CSU PUMP	1	KMEM
DC-14-5300		SHORT NECK MAIN PUMP SUCTION INLETS - DS & OS	1	KMEM
DC-14-5560	>	6" NST MAIN PUMP SUCTION PRESSURE VENTED CAPS (2)	1	KMEM
		HEADER - AUXILIARY SUCTION/S - AERIALS	**1**	**KMEM**
DC-20-1000		2 1/2" AUX. SIDE SUCTION @ DS PANEL TO REAR OF MAIN INLET	1	KMEM
DC-20-1100		2 1/2" AKRON #8800 S.S. BALL VALVE, DS REAR AUX SUCTION	1	KMEM
DC-20-1200		SWING CONTROL @ VALVE, DS REAR AUX SUCTION	1	KMEM
DC-20-9500		BEHIND PANEL MOUNT	1	KMEM
		****** HEADER - TANK TO PUMP - MD REARMOUNTS**	**1**	**KMEM**
DC-25-1200		TANK TO PUMP - 3" VALVE - LADDERS & PLATFORMS	1	KMEM
DC-25-3110		3" AKRON #8800 SERIES - S.S. BALL, VALVE , TANK TO PUMP	1	KMEM
DC-25-5110		3" PUSH/PULL CONTROL FOR TANK TO PUMP	1	KMEM
		****** HEADER - TANK FILL - MD REARMOUNT**	**1**	**KMEM**
DC-30-2100		TANK FILL LINE 2" FROM PUMP - SIDE MOUNT	1	KMEM
DC-30-2300		2" AKRON #8800 SERIES - S.S. BALL TANK FILL, SIDE MOUN	1	KMEM
DC-30-6500		PUSH/PULL CONTROL FOR TANK FILL	1	KMEM
		****** DISCHARGES & ACCESSORIES, RM-SA-MD AERIAL - SIDE MOUNT**	**1**	**KMEM**
		DRIVER'S SIDE #1 MAIN DISCHARGE	**1**	**KMEM**
DC-35-0010		DS MAIN DISCHARGE #1 - SIDE MOUNT	1	KMEM
DC-35-0110		2 1/2" AKRON #8800 SERIES - S.S. BALL, DS #1, SIDE MOUNT	1	KMEM
DC-35-1815		DS #1 DISCH - 2 1/2" STRAIGHT NST & 30-DEGREE NST ELBOW	1	KMEM
DC-35-2010		2 1/2" NST PRESSURE VENTED CAP - DS DISCHARGE #1	1	KMEM
DC-35-2410		PUSH/PULL CONTROL FOR DS DISCHARGE #1 -SIDE MOUNT	1	KMEM
DC-35-3110		INNOVATIVE CONTROLS LIQUID FILLED 2 1/2" PRESS GAUGE SS- DS DISCHARGE #1	1	KMEM
		DRIVER'S SIDE #2 MAIN DISCHARGE	**1**	**KMEM**
DC-35-5010		DS MAIN DISCHARGE #2 - SIDE MOUNT	1	KMEM
DC-35-5110		2 1/2" AKRON #8800 SERIES - S.S. BALL, DS #2, SIDE MOUNT	1	KMEM
DC-35-6815		DS #2 DISCH - 2 1/2" STRAIGHT NST & 30-DEGREE NST ELBOW	1	KMEM
DC-35-7010		2 1/2" NST PRESSURE VENTED CAP - DS DISCHARGE #2	1	KMEM

PART NO	S	DESCRIPTION	QTY	ID
DC-35-7410		PUSH/PULL CONTROL FOR DS DISCHARGE #2 -SIDE MOUNT	1	KMEM
DC-35-8110		INNOVATIVE CONTROLS LIQUID FILLED 2 1/2" PRESS GAUGE SS- DS DISCHARGE #2	1	KMEM
		OFFICER'S SIDE #1 MAIN DISCHARGE	**1**	**KMEM**
DC-39-0010	>	OS MAIN DISCHARGE #1 - SIDE MOUNT	1	KMEM
DC-39-0110		2 1/2" AKRON #8800 SERIES - S.S. BALL, OS #1, SIDE MOUNT	1	KMEM
DC-39-1815		OS #1 DISCH - 2 1/2" STRAIGHT NST & 30-DEGREE NST ELBOW	1	KMEM
DC-39-2010		2 1/2" NST PRESSURE VENTED CAP - OS DISCHARGE #1	1	KMEM
DC-39-2410		PUSH/PULL CONTROL FOR OS DISCHARGE #1 -SIDE MOUNT	1	KMEM
DC-39-3110		INNOVATIVE CONTROLS LIQUID FILLED 2 1/2" PRESS GAUGE SS- OS DISCHARGE #1	1	KMEM
		OFFICER'S SIDE #2 MAIN DISCHARGE	**1**	**KMEM**
DC-39-5010	>	OS MAIN DISCHARGE #2 - SIDE MOUNT	1	KMEM
DC-39-5080	>	**** WATEROUS PUMP LDH DISCHARGE PORT ****	1	KMEM
DC-39-5130	>	4" AKRON #8840 VALVE, OS #2, SIDE MOUNT	1	KMEM
DC-39-6865	>	OS #2 DISCH - 4" STRAIGHT NST	1	KMEM
DC-39-7045		DELETE 4" NST CAP - OS DISCHARGE #2	1	KMEM
DC-39-7315		4" NSTF X 4" STORZ KOCHEK SKE-R 30° ADAPTER WITH CAP OS	1	KMEM
DC-39-7810	>	AKRON HANDWHEEL GEAR VALVE CONTROL, OS DISCHARGE #2	1	KMEM
DC-39-8110		INNOVATIVE CONTROLS LIQUID FILLED 2 1/2" PRESS GAUGE SS- OS DISCHARGE #2	1	KMEM
		CROSSLAY #1 DISCHARGE	**1**	**KMEM**
DC-47-0400		CROSSLAY #1, 1 1/2" - AERIAL	1	KMEM
DC-47-1110		CROSSLAY #1 CAPACITY - 200' OF 1 3/4" HOSE	1	KMEM
DC-47-1410		CROSSLAY #1 - DOUBLE STACK HOSE DESIGN	1	KMEM
DC-47-1510		1 1/2" NST CHICKSAN SWIVEL - CROSSLAY #1	1	KMEM
DC-47-2110		CROSSLAY #1, PLUMBING, 2" STAINLESS STEEL PIPING	1	KMEM
DC-47-2210		2" AKRON #8800 SERIES - S.S. BALL, VALVE CROSSLAY #1, DISCH	1	KMEM
DC-47-2610		PUSH/PULL 1/4 TURN CONTROL CROSSLAY #1	1	KMEM
DC-47-3210		INNOVATIVE CONTROLS LIQUID FILLED 2 1/2" PRESS GAUGE SS - CROSSLAY #1	1	KMEM
		CROSSLAY #2 DISCHARGE	**1**	**KMEM**
DC-47-5400		CROSSLAY #2, 1 1/2" - AERIAL	1	KMEM
DC-47-6110		CROSSLAY #2 CAPACITY - 200' OF 1 3/4" HOSE	1	KMEM
DC-47-6410		CROSSLAY #2 - DOUBLE STACK HOSE DESIGN	1	KMEM
DC-47-6510		1 1/2" NST CHICKSAN SWIVEL - CROSSLAY #2	1	KMEM
DC-47-7110		CROSSLAY #2, PLUMBING, 2" STAINLESS STEEL PIPING	1	KMEM
DC-47-7210		2" AKRON #8800 SERIES - S.S. BALL, VALVE CROSSLAY #2,	1	KMEM
DC-47-7610		PUSH/PULL 1/4 TURN CONTROL CROSSLAY #2	1	KMEM
DC-47-8210		INNOVATIVE CONTROLS LIQUID FILLED 2 1/2" PRESS GAUGE SS - CROSSLAY #2	1	KMEM
		CROSSLAY & SPEEDLAY OPTIONS - RM AERIAL	**1**	**KMEM**
DC-50-7015	>	VINYL CROSS LAY COVER	1	KMEM
DC-50-7030		CROSSLAY COVER RED IN COLOR	1	KMEM
	>	**WATERWAY DISCHARGE**	**1**	**KMEM**
DC-62-0210		AERIAL WATERWAY DISCHARGE - SA-RM AERIAL	1	KMEM
DC-62-1130		WATERWAY DISCHARGE, PLUMBING, 4" STAINLESS STEEL - RM	1	KMEM
DC-62-1240		4" AKRON #8840 SERIES VALVE, WATERWAY	1	KMEM
DC-62-1950	>	AKRON HANDWHEEL GEAR VALVE CONTROL, WATERWAY	1	KMEM
DC-62-2210		INNOVATIVE CONTROLS LIQUID FILLED 2 1/2" PRESS GAUGE SS - WATERWAY	1	KMEM
		PUMP PANELS & ACCESSORIES	**1**	**KMEM**
DD-65-0505		SIDE MOUNT PUMP PANEL - RM AERIAL	1	KMEM
DD-65-4115		SIDE MOUNT PANELS - 12 GAUGE BRUSHED STAINLESS STEEL	1	KMEM
DD-65-4710		VERTICALLY HINGED GAUGE PANEL - SIDE MOUNT	1	KMEM
DD-65-4810		OFFICER SIDE VERTICALLY HINGED PUMP ACCESS DOOR - SIDE MOUNT	1	KMEM
DD-65-5150		PANEL FASTENERS	1	KMEM
DD-65-5510		CAPS AND ADAPTERS SAFETY TETHER - BALL CHAIN	1	KMEM
DD-65-8820		PUMP PANEL DISCH./SUCTION TRIM PLATES, HIGH POLISHED	1	KMEM
DD-65-9000		DISCHARGE GAUGE TRIM BEZELS	1	KMEM

PART NO	S	DESCRIPTION	QTY	ID
DD-65-9110		IDENTIFICATION PLATES	1	KMEM
DD-66-0100		PUMP OPERATOR'S PANEL LIGHT SHIELD	1	KMEM
DD-66-0135		TECNIQ E18 LED LIGHTS - LIGHT SHIELD	1	KMEM
DD-66-2100		OS PUMP PANEL LIGHTING	1	KMEM
DD-66-2130		TECNIQ EON 3 LED LIGHTS - OS PUMP PANEL	1	KMEM
		PUMP OPERATOR'S PANEL - SIDE MOUNT, AERIAL	**1**	**KMEM**
DD-70-2150		AIR HORN CONTROL BUTTON ON PUMP PANEL	1	KMEM
DD-70-2290		3/4" PUMP BY-PASS COOLER ON PUMP PANEL	1	KMEM
DD-70-2334		FIRE RESEARCH "IN CONTROL" PRESSURE GOVERNOR CONTROL @ PANEL	1	KMEM
DD-70-2410		PUMP PRESSURE & VACUUM TEST PORTS @ PANEL	1	KMEM
DD-70-4125	>	DELETE - MASTER PRESSURE & COMPOUND GAUGES	1	KMEM
DD-70-4130		**** CONSIDER DELETING MASTER GAUGES - IN GOVERNOR DISPLAY ****	1	KMEM
DD-70-4680		PRESSURE & COMPOUND GAUGE RANGES - SINGLE STAGE	1	KMEM
DD-70-4900		AUXILIARY ENGINE COOLER	1	KMEM
DD-70-4930		GAUGE HEATERS, MC PRODUCTS ON ALL DISCHARGE GAUGES	1	KMEM
		WATER TANK LEVEL GAUGE - AERIAL	**1**	**KMEM**
DD-72-0410		FIRE RES - TANK VISION #WLA300-A00 LED WATER TANK GAUGE - PRIMARY	1	KMEM
DD-72-1300	>	FIRE RES WATER LEVEL - 1/4" NPT PRESS TRANS @ BOTTOM TANK	1	KMEM
DD-80-0110		SLIDE-OUT STEP @ DRIVER'S PUMP OPERATOR'S PANEL	1	KMEM
DE-00-1000	>	**** HEADER, 75-79' SA, WATER TANK	1	KMEM
		WATER TANKS/OPTIONS AERIALS	**1**	**KMEM**
DE-05-1700	>	UPF POLYIIE TANK, 300 GAL. - AERIAL	1	KMEM
DE-05-6000		TANK DESCRIPT, CONSTR AND MOUNT, UPF POLY IIE TANK	1	KMEM
JA-00-0100		BODY AND COMPARTMENT HEADER (ALL AERIAL DEVICES)	1	KMEM
JA-00-5000		GEN. 3/16" ALUM BODY DESCRIPTION FOR REAR MOUNT AERIALS 79 SA	1	KMEM
TF-02-1060		COMPARTMENTATION, 79SA STYLE #4H-HI "STRAIGHT SHOT"	1	KMEM
		****** HEADER, 79-SA BODY OPTIONS (WITH PUMP)**	**1**	**KMEM**
TF-10-0100		BEVELED OVERLAPPING DOORS, ALL COMPARTMENTS, ALL DEVICES	1	KMEM
TF-10-1900		BRUSHED FINISHED DOOR PANS - 2" THICK DOORS	1	KMEM
TF-10-2700		DOOR HINGE FOR BEVELED OVERLAPPING HINGED DOORS	1	KMEM
TF-10-2800		DOOR SEAL FOR BEVELED OVERLAPPING HINGED DOORS	1	KMEM
TF-10-2940		ROTARY LATCHES WITH D-RING HANDLES	1	KMEM
TF-10-3150		GAS SHOCK ON HORIZONTALLY & VERTICALLY HINGED DOORS	1	KMEM
TF-10-6000		COMPARTMENT FLOORS (AERIALS ONLY)	1	KMEM
TF-11-0500		COMPARTMENT GENERAL DESCRIPTION, ALL LADDERS & PLATFORMS	1	KMEM
TF-11-1441		PAINTED REAR BODY PANEL, RM	1	KMEM
TF-11-2210		1/2 WIDTH S. S. OUTRIGGER COVER PANEL, TWO RIGGER DEVICES	1	KMEM
TF-11-3045		BODY RUB RAILS, C-CHANNEL	1	KMEM
TF-12-1000		RUNNING BOARD STEPS (AERIALS ONLY)	1	KMEM
TF-13-3010		REAR TURNTABLE ACCESS LADDER FRAMEWORK (SS) 75/100 SA/TA	1	KMEM
TF-13-3115		REAR MOUNT, TURNTABLE PULL/DROP STEPS, DS REAR (HD-S/S)	1	KMEM
TF-13-5010		REAR-MOUNTS, "STRAIGHT SHOT" EXTRUDED ALUMINUM BODY HANDRAILS	1	KMEM
TF-14-1000		ALUMINUM WHEEL WELL LINERS	1	KMEM
TF-14-1700		POLISHED ALUMINUM FENDERETTES, SINGLE AXLE BODIES	1	KMEM
TF-14-5000		REAR MUD FLAPS	1	KMEM
TF-14-6700		PAINTED REAR TOW EYES, BELOW BODY - REARMOUNT AERIALS	1	KMEM
TF-15-1030		HOSE BED, "STRAIGHT SHOT", 75-100 HIGH BODY	1	KMEM
TF-15-1900		ALUMINUM HOSE BED FLOORING - AERIAL	1	KMEM
TF-15-3110		HOSE BED COVER, VINYL WITH QTR TURNS	1	KMEM
TF-15-3190		HYPALON MATERIAL RED IN COLOR	1	KMEM
		****** HEADER, COMPARTMENT ACCESSORIES - REARMOUNTS**	**1**	**KMEM**
TJ-05-1000		ADJUSTABLE SHELF DESCRIPTION - REARMOUNT	1	KMEM
TJ-05-2000	>	(AUTO QTY) ADJUSTABLE SHELF(S), MOUNTED AS DIRECTED	8	KMEM
TJ-10-1000		250#, FLOOR MOUNTED, ROLLOUT TRAY DESCRIPTION - REARMOUNT	1	KMEM
TJ-10-1105	>	(AUTO QTY) ROLLOUT TRAY(S), MOUNTED AS DIRECTED	4	KMEM
TJ-55-1000		SWING OUT TOOL BOARD, PAC TRAC DOUBLE FACED EXTRUSION - REARMOUNT	1	KMEM

PART NO	S	DESCRIPTION	QTY	ID
TJ-55-1200	>	(AUTO QTY) SWING OUT TOOL BOARD(S), MOUNTED AS DIRECTED	1	KMEM
	>	**"NOTE" READ THIS BEFORE ADDING ANY ADDITIONAL GROUND LADDERS**	**1**	**KMEM**
		****** HEADER, 79-SA-HI-SS GROUND LADDERS**	**1**	**KMEM**
TN-00-5015	>	CENTER LADDER STORAGE, 79' SA "STRAIGHT SHOT"	1	KMEM
TN-00-7020		ROLL-UP DOOR - BRUSHED, LADDER COMPARTMENT, REAR MOUNT ONLY	1	KMEM
TN-01-0115		ALCO-LITE 115' LADDER COMP, 79' SA "STRAIGHT SHOT"	1	KMEM
TN-02-1155		ALCO-LITE PEL-30 30' 2-SECTION EXTENSION LADDER (ALUM)	1	KMEM
TN-02-1160		ALCO-LITE PEL-28 28' 2-SECTION EXTENSION LADDER (ALUM)	1	KMEM
TN-02-2510		ALCO-LITE PRL-16 16' ROOF LADDER W/FOLDING HOOKS (ALUM)	2	KMEM
TN-02-7000		ALCO-LITE AEL-14 14' ATTIC EXTENSION LADDER (ALUM)	1	KMEM
TN-02-8005		ALCO-LITE FL-12 12' FOLDING ATTIC LADDER (ALUM)	1	KMEM
		****** HEADER, PIKE POLES & HOLDERS - AERIALS**	**1**	**KMEM**
TN-10-0500	>	PIKE POLE TUBE(S) - AERIALS	6	KMEM
TN-10-2030		FIRE HOOKS UNLIMITED PIKE POLES 2-6', 2-8', & 2-12' WITH FIB	1	KMEM
TN-20-0000		ADDITIONAL ITEMS SHIPPED WITH VEHICLE, ALL AERIAL DEVICES	1	KMEM
		****** HEADER, LOOSE EQUIPMENT - AERIAL**	**1**	**KMEM**
TN-35-1015		TWO (2) ZICO #SAC-44 FOLDING WHEEL CHOCKS, (2) MTD DRIVER SIDE	1	KMEM
		****** HEADER, 79' AERIAL LADDER, SINGLE AXLE - 750# W/DOWNRIGGERS**	**1**	**KMEM**
TQ-00-0560		79' AERIAL LADDER, GEN INFO, INTENT & DESIGN STANDARDS	1	KMEM
TQ-00-3000		MOUNTING OF AERIAL, REAR MOUNTS	1	KMEM
TQ-00-3210		HEIGHT AND REACH, 79' AERIAL LADDER	1	KMEM
TQ-00-4000		MATERIAL STANDARDS, ALL DEVICES	1	KMEM
TQ-00-5004		79' AERIAL LADDER, HYDRAULIC SYSTEM, 750#	1	KMEM
TQ-00-5110		PARKER HOSE KIT - 2 JACK UNIT	1	KMEM
TQ-00-6120		HYDRAULIC PUMP - PRESSURE COMPENSATED	1	KMEM
TQ-00-7010		HYDRAULIC RESERVOIR - 40 GALLON	1	KMEM
TQ-00-7065		HYDRAULIC OIL - REGULAR - A/W 46 - 60 GAL	1	KMEM
TQ-00-7110		DIVERTER VALVE, REAR MOUNT DEVICES	1	KMEM
TQ-00-7214		OUTRIGGER HYDRAULIC CONTROL VALVE - 79 RM, PROPORTIONAL	1	KMEM
TQ-00-7410		ELECTRIC TURNTABLE HYDRAULIC CONTROL VALVE, RM LADDERS	1	KMEM
TQ-00-7505		HYDRAULIC SYSTEM FILTRATION	1	KMEM
TQ-00-8510		RM LADDER 2-OUTRIGGER, "IQAN" MOTION CONTROL SYSTEM - ELECTRIC CONTROLS @ TT	1	KMEM
TQ-00-8700		HYDRAULIC PUMP PRESSURE - DISPLAY	1	KMEM
TQ-00-8710		ELEVATION ANGLE OF LADDER - DISPLAY	1	KMEM
TQ-00-8715		VERTICAL HEIGHT OF LADDER - DISPLAY	1	KMEM
TQ-00-8725		DEGREE OF ROTATION FROM VEHICLE CENTERLINE - DISPLAY	1	KMEM
TQ-00-8730		E-ZONE CAB & BODY AVOIDANCE WARNING - DISPLAY	1	KMEM
TQ-00-8735		E-ZONE SHORT JACK WARNING - DISPLAY	1	KMEM
TQ-00-8740		CRADLE ALIGNMENT MESSAGE - DISPLAY	1	KMEM
TQ-00-8750		DEVICE LOAD MONITORING - DISPLAY	1	KMEM
TQ-00-8760		E-SPEED LADDER TIP SPEED CONTROL - DISPLAY	1	KMEM
TQ-00-8765		E-CUSH RAMP CONTROL FOR ELEVATION - DISPLAY	1	KMEM
TQ-00-8770		E-CUSH RAMP CONTROL FOR EXTENSION & RETRACTION - DISPLAY	1	KMEM
TQ-00-8890		WARNING MESSAGES - TURNTABLE ONLY	1	KMEM
TQ-00-9502		79' AERIAL LADDER, EMERGENCY HYDRAULIC PUMP, EPU	1	KMEM
TQ-01-1000		HOT SHIFT PTO W/CONTROLS IN CAB	1	KMEM
TQ-01-1100		FAST IDLE CONTROL FOR ALL AERIAL DEVICES	1	KMEM
TQ-02-0014		79' AERIAL LADDER, TORQUE BOX, SINGLE AXLE 750# W/DOWNRIGGERS	1	KMEM
TQ-02-1012		79' AERIAL LADDER OUTRIGGERS, SINGLE AXLE 750# W/DOWNRIGGERS	1	KMEM
TQ-02-1612		79' AERIAL LADDER OUTRIGGERS, SA - HORIZONTAL CYLINDER 750#	1	KMEM
TQ-02-1812		79' AERIAL LADDER OUTRIGGERS, SA - VERTICAL CYLINDERS, 750#	1	KMEM
TQ-02-2100		IQAN - OUTRIGGER STRING POTENTIOMETER - TWO (2) OUTRIGGERS	1	KMEM
TQ-02-2250		OVERSIZED OUTRIGGER/JACK FOOT PADS, APPLICABLE DEVICES	1	KMEM
TQ-02-2500		OUTRIGGER INTERLOCK SYSTEM & ALARM, ALL DEVICES	1	KMEM
		****** HEADER - OUTRIGGER LIGHTING, 2-OUTRIGGERS / 2-DOWNRIGGERS**	**1**	**KMEM**
TQ-02-5125		AKRON LED OUTRIGGER LAMPS, 2-OUTRIGGERS	1	KMEM
TQ-02-5205		LED OUTRIGGER GROUND LIGHTS - GROTE WHITELIGHT, 2-OUTRIGGERS	1	KMEM
TQ-02-5360		CODE 3 45 SERIES, LED LIGHTS ON (4) OUTRIGGER PANELS	1	KMEM
TQ-02-6005		OUTRIGGER WARNING LIGHT ACTIVATION, PRIMARY WARNING	1	KMEM

PART NO	S	DESCRIPTION	QTY	ID
TQ-02-6800		OUTRIGGER SCOTCHLITE, WHITE	1	KMEM
TQ-02-7005		79' RM LADDER, BUTTON OUTRIGGER CONTROLS - SINGLE JACKS W/DOWNRIGGERS	1	KMEM
TQ-02-9200		OUTRIGGER LEVEL SIDE TO SIDE, ALL REAR MOUNT DEVICES	1	KMEM
TQ-03-0102		79' AERIAL LADDER, TURNTABLE, SINGLE & TANDEM AXLE	1	KMEM
TQ-03-3010		TURNTABLE DECK - ALUMINUM TREADPLATE	1	KMEM
TQ-04-1852		HEEL PIN STEP ON TURNTABLE, 79', 103', 109' & 123' & 100' M.M. LADDERS	1	KMEM
TQ-04-1855		TURNTABLE HANDRAILS, KNURLED ALUMINUM, 3-SIDES	1	KMEM
TQ-04-2112		HEEL PINS - 79'	1	KMEM
TQ-04-2300		STAINLESS STEEL CRADLE ALIGNMENT ARROWS ON TURNTABLE	1	KMEM
TQ-04-2800		SAFETY CHAINS BETWEEN TURNTABLE HANDRAIL, REAR MOUNTS & TDA	1	KMEM
TQ-04-5002		79' AERIAL LADDER, TURNTABLE SWIVEL, TANDEM & SINGLE AXLE	1	KMEM
TQ-04-9000		IQAN - SWIVEL ROTATION ENCODER	1	KMEM
TQ-06-0102		79' LADDER, LADDER CONSTRUCTION, SINGLE & TANDEM AXLE	1	KMEM
TQ-06-0900		STAINLESS STEEL EGRESS W/TIP SKID GAURDS	1	KMEM
TQ-06-1000		79' SA/TA, LADDER DIMENSIONS	1	KMEM
TQ-06-3000		RUNG COVERS - PHOTOLUMINESCENT, ALL DEVICES	1	KMEM
TQ-06-4000		*** MUST UPGRADE TO DUAL STEPS - CREEPER CONTROLS SELECTED ***	1	KMEM
TQ-06-4015		DUAL FOLDING STEPS @ LADDER TIP, ALL DEVICES	1	KMEM
TQ-06-4100		RED SCOTCHLITE MATERIAL ON LAST 6' OF LADDER TIP	1	KMEM
TQ-06-4200		4' FIRE HOOKS UNLIMITED PIKE POLE MOUNTED IN FLY SECTION OF LADDER	1	KMEM
TQ-06-4240	>	PIKE POLE MOUNTED ON LEFT SIDE OF FLY SECTION	1	KMEM
TQ-06-4250		6 LB. PICKHEAD AXE MOUNTED IN FLY SECTION, INCLUDES AXE	1	KMEM
TQ-06-4260	>	AXE MOUNTED ON LEFT SIDE OF FLY SECTION	1	KMEM
TQ-06-6500		RESCUE EYELET ON LAST RUNG OF LADDER TIP	1	KMEM
TQ-06-9000		AERIAL TRAVEL SUPPORT, ALL DEVICES	1	KMEM
TQ-06-9035		CRADLE ILLUMINATION LIGHTS - GROTE WHITELIGHT LED	1	KMEM
TQ-07-0102		79' AERIAL LADDER, ELEVATION SYSTEM, S/A AND T/A	1	KMEM
TQ-07-2800		IQAN - INCLINOMETER	1	KMEM
TQ-07-2801		IQAN - MOMENT LOAD INDICATOR	1	KMEM
TQ-07-2805		IQAN - E-CUSH CONTROL, ELEVATION SYSTEM - LADDER	1	KMEM
TQ-08-0102		79' AERIAL LADDER, ROTATION SYSTEM, SA & TA	1	KMEM
TQ-08-2800		ROTATION MOTOR AND BRAKE - 41" EXTERNAL BEARINGS	1	KMEM
TQ-08-2950		SWING DRIVE ADJUSTMENT	1	KMEM
TQ-08-3000		IQAN - "E-SPEED" SAFETY SYSTEM, LADDERS	1	KMEM
TQ-08-3100		IQAN - "E-ZONE" ROTATION SAFETY SYSTEM, 2-OUTRIGGERS	1	KMEM
TQ-08-3650		IQAN - "E-ZONE" CAB & BODY PROXIMITY SYSTEM - LADDERS	1	KMEM
TQ-09-0102		79' AERIAL LADDER, EXTENSION/RETRACTION SYSTEM, SINGLE & TAN	1	KMEM
TQ-09-2350		EXTENSION CYLINDERS PAINTED LADDER PAINT COLOR	1	KMEM
TQ-09-2800		IQAN - EXTENSION SYSTEM STRING POTENTIOMETER	1	KMEM
TQ-09-2810		IQAN - "E-CUSH" EXTENSION/RETRACTION SYSTEM - LADDERS	1	KMEM
TQ-09-3020		LADDER SLIDE PADS, 79' LADDER	1	KMEM
		LADDER EXTENSION NUMBERS, ALL DEVICES	**1**	**KMEM**
TQ-09-3150		LADDER LEVEL INDICATOR (BASE SECTION) - LIGHTED	1	KMEM
TQ-09-3205		LADDER, CABLE/HOSE/WIRE ROUTING, 79' LADDER	1	KMEM
		****** HEADER - LADDER, 120 VOLT ELECTRICAL SYSTEM & ACCESSORIES**	**1**	**KMEM**
TQ-10-0125		DELETE LADDER TIP RECEPTACLE	1	KMEM
		****** HEADER - LADDER, 12 VOLT ELECTRICAL SYSTEM & ACCESSORIES**	**1**	**KMEM**
TQ-10-1018		HEEL PIN STEP LIGHTS - TECNIQ EON 3 LED LIGHTS	1	KMEM
TQ-10-1040		TURNTABLE CONTROL CONSOLE LIGHTING - LUMA BAR LED H2O	1	KMEM
TQ-10-1060		TURNTABLE CONSOLE STEP LIGHT - TECNIQ EON 3 LED	1	KMEM
TQ-10-1110		TWO (2) UNITY SPOTS @ LADDER BASE SECTION	1	KMEM
TQ-10-1210		ONE (1) UNITY SPOT & ONE (1) FLOOD @ LADDER TIP	1	KMEM
TQ-10-2800		LADDER WALKWAY ILLUMINATION LIGHTS, 3-SECT LADDER	1	KMEM
TQ-10-2850		RED - LADDER ILLUMINATION LIGHTS	1	KMEM
TQ-12-0010		LADDER, CONTROL STATION	1	KMEM
TQ-12-0020		RM LADDERS, CONSOLE LOCATED @ LH SIDE OF TURNTABLE, STD	1	KMEM
TQ-12-0085		PAINTED ALUMINUM TURNTABLE CONSOLE - MATCH LADDER COLOR	1	KMEM
TQ-12-0100		79' AERIAL LADDER, TURNTABLE CONTROL STATION, SA & TA	1	KMEM

PART NO	S	DESCRIPTION	QTY	ID
TQ-12-2520		FIRE RESEARCH INSIGHT FLOWMETER @ TURNTABLE CONSOLE	1	KMEM
TQ-12-2595		TURNTABLE CONSOLE COVER - PAINTED RADIUS	1	KMEM
TQ-12-3000		IQAN - "CREEPER CONTROLS" @ LADDER TIP	1	KMEM
TQ-14-1200		LADDER, FIRE RESEARCH ACT -2 WAY COMMUNICATION SYSTEM - LOWER CONTROL	1	KMEM
TQ-14-1205		LADDER, FIRE RESEARCH ACT 2-WAY COMMUNICATION SYSTEM - UPPER SPEAKER/MIC	1	KMEM
TQ-18-0012		79' AERIAL LADDER, LADDER WATERWAY SYSTEM, SINGLE & TANDEM	1	KMEM
TQ-18-1012		79' AERIAL LADDER, LADDER, SINGLE & TANDEM WATERWAY	1	KMEM
TQ-18-2502		4" HEEL PIN SWIVEL - 79' LADDER	1	KMEM
TQ-18-2600		AUTOMATIC WATER DRAIN/VENT	1	KMEM
TQ-18-3000		ALL DEVICES, WATERWAY RELIEF VALVE	1	KMEM
TQ-18-3015		REAR MOUNT AERIAL WATERWAY DRAIN, 1 1/2" VALVE	1	KMEM
TQ-18-3150		4" NST REAR AERIAL WATERWAY INLET ADAPTER, REAR MOUNTS	1	KMEM
TQ-18-3200		4" NSTF x 4" STORZ KOCHEK SKE-R 30° ADAPTER FOR REAR INLET	1	KMEM
TQ-18-3800		INNOVATIVE CONTROLS 2 1/2" GAUGE FOR AERIAL INLET, REAR MOUNTS	1	KMEM
TQ-18-4130	>	LADDER, AKRON #3480 "STREAMMASTER II" MONITOR	1	KMEM
TQ-18-4210	>	LADDER, AKRON #5178 NOZZLE	1	KMEM
TQ-18-4300		LADDER, AKRON MONITOR CONTROLS W/ AUTO STOW	1	KMEM
TQ-18-4505		LADDER, ELECTRIC SELECTABLE WATERWAY TROLLEY - NEW	1	KMEM
		LADDER MANUAL TFT VALVE UNDER MONITOR	**1**	**KMEM**
TQ-18-4775		2.5" NH MALE THREAD - C1- VALVE UNDER MONITOR	1	KMEM
TQ-18-4790		EXTENDED AUTOMATIC DRAIN - C1 - VALVE UNDER MONITOR	1	KMEM
TQ-18-4795		2-1/2" x 1-1/2" REDUCER WITH CAP, FOR V ALVE UNDER MONITOR DISCHARGES	1	KMEM
TQ-18-4950		"STORE FRONT BLITZ" DESCRIPTION	1	KMEM
TQ-20-0102		79' AERIAL LADDER, LADDER CAPACITIES, SINGLE AXLE, 750#	1	KMEM
TQ-50-0200	>	FIRE DEPT AERIAL FAMILIARIZATION - PROVIDED BY REP	1	KMEM
TQ-50-0240	>	REP PROVIDED FAMILIARIZATION - FOUR (4) DAYS	1	KMEM
TQ-50-0600		AERIAL SERVICE, ALL DEVICES	1	KMEM
TQ-50-0700		WARNING DECALS, ALL DEVICES	1	KMEM
TQ-52-0100		AERIAL LADDER, MANUALS, TWO (2) SETS	1	KMEM
TQ-70-0102	>	79' AERIAL LADDER, SINGLE AXLE, CERTIFICATION & TESTING, 750#	1	KMEM
		****** HEADER - PAINT SECTION - ALL UNITS ******	**1**	**KMEM**
UA-00-1100		GENERAL PAINT DESCRIPTION - ALL	1	KMEM
UA-00-1200		GENERAL PRIMER & PREP DESCRIPTION - LADDER/PLATFORM	1	KMEM
UA-00-1400		GENERAL FINISH PAINT DESCRIPTION - LADDER/PLATFORM	1	KMEM
UA-00-2700		BODY BUFFING & FINISH - LADDER/PLATFORM	1	KMEM
		****** HEADER - LADDER/PLATFORM BODY PAINT ******	**1**	**KMEM**
UA-03-0200		INSIDE/UNDERSIDE BODY PAINTED JOB COLOR - LADDER/PLATFORM	1	KMEM
UA-03-0400		CMPT INT W/ MULTISPEC, WHITE MARBLE STONE - LADDER/PLATFORM	1	KMEM
UA-03-0900		SINGLE COLOR BODY PAINT SCHEME - LADDER/PLATFORM	1	KMEM
UA-03-2200		PUMPHOUSE & PLUMBING PAINTED JOB COLOR - LADDER/PLATFORM	1	KMEM
		****** HEADER - SINGLE AXLE CUSTOM CHASSIS PAINT (AERIAL)**	**1**	**KMEM**
UA-05-0050		CUSTOM CAB PRIMER & PREP	1	KMEM
UA-05-0070		CUSTOM FINISH PAINT & PREP	1	KMEM
UA-05-0200		TWO TONE CUSTOM CAB PAINT SCHEME	1	KMEM
UA-05-0350		CUSTOM CAB BUFFING & FINISH	1	KMEM
UA-05-0360		CUSTOM CAB INTERIOR PAINT - TEXTURED GRAY	1	KMEM
UA-05-0405		CUSTOM CHASSIS JOB COLOR FRAME RAILS	1	KMEM
UA-05-0500		CUSTOM CHASSIS WHEEL AND HUB PAINT - SINGLE AXLE	1	KMEM
UA-06-0200		LADDER, PAINTING, ALL DEVICES, WHITE #91528	1	KMEM
UA-06-0450		EXTENSION CYLINDERS PAINTED TO MATCH LADDER COLOR	1	KMEM
UA-06-0900		TORQUEBOX PAINT - JOB COLOR	1	KMEM
UA-06-1100		OUTRIGER PAINT - SILVER URETHABOND 104	1	KMEM
UA-06-1205		TURNTABLE PAINT - LADDER COLOR	1	KMEM
UA-06-1215		TURNTABLE CONSOLE PAINT - LADDER COLOR	1	KMEM
UA-06-1225		LIFT CYLINDERS CONSOLE PAINT - LADDER COLOR	1	KMEM
UA-06-1500		LADDER RUST INHIBITOR - ALL DEVICES	1	KMEM
UA-06-2120	>	PAINT CODES, TWO-TONE COLORS, FILL IN BLANKS	1	KMEM

PART NO	S	DESCRIPTION	QTY	ID
UA-06-2130		PAINT CODES, AERIAL DEVICE - WHITE #91528	1	KMEM
UA-06-2200		PINT OF TOUCH-UP PAINT	1	KMEM
UA-06-2510		FINALIZATION & DETAILING - LADDER/PLATFORM	1	KMEM
UA-06-2850		RUSTPROOFING WARRANTY, TEN (10) YEAR	1	KMEM
		****** HEADER, LETTERING & STRIPING - 79-SA-RM**	**1**	**KMEM**
UA-12-0100		COMPUTER GENERATED LETTERING	1	KMEM
UA-12-1220		GOLDLEAF W/ DUAL DROP SHADOW LETTERING ON FRONT CAB DOORS	1	KMEM
UA-12-1245		3" LETTERING ON FRONT CAB DOORS	1	KMEM
UA-12-1760		GOLDLEAF W/ DUAL DROP SHADOW LETTERING ON CREW CAB DOORS	1	KMEM
UA-12-1785		3" LETTERING ON CREW CAB DOORS	1	KMEM
UA-12-2720		GOLDLEAF W/ DUAL DROP SHADOW LETTERING ON FRONT OF CAB	1	KMEM
UA-12-2745		3" LETTERING ON FRONT OF CAB	1	KMEM
UA-12-3120		GOLDLEAF W/ DUAL DROP SHADOW LETTERING ON CAB SIDE PANEL	1	KMEM
UA-12-3145		3" LETTERING ON CAB SIDE PANEL	1	KMEM
UA-12-3660		SCOTCH-LITE W/ DROP SHADOW LETTERING ON REAR BODY PANEL	1	KMEM
UA-12-3745		3" LETTERING ON REAR BODY	1	KMEM
UA-13-0100		LETTERING FONT - BASIC BLOCK TYPE FONT	1	KMEM
UA-14-1310		LARGE CUSTOM FIRE DEPARTMENT LOGO	1	KMEM
UA-14-1320		SCOTCH-LITE W/ TWO COLORS - LARGE LOGO	1	KMEM
UA-14-1335	>	LOCATION - LARGE CUSTOM LOGO	1	KMEM
UA-16-1000		ACCENT STRIPING & SCROLL OPTIONS	1	KMEM
UA-16-1200		1/2" ACCENT STRIPE ON BODY UPPER & LOWER AREAS OF BODY	1	KMEM
UA-16-1210		GOLD LEAF ACCENT MATERIAL - UPPER & LOWER AREAS OF BODY	1	KMEM
UA-16-1500		1/2" ACCENT STRIPE ON CAB PAINT BREAK LINE	1	KMEM
UA-16-1510		GOLD LEAF ACCENT MATERIAL - CAB PAINT BREAK LINE	1	KMEM
UA-20-0100		19" X 144" LETTERING PANELS ON BASE SECTION	1	KMEM
UA-20-0200		SIGN PANELS TO PAINTED TO MATCH AERIAL DEVICE COLOR	1	KMEM
UA-20-0520		SCOTCH-LITE W/ DROP SHADOW LETTERING FOR AERIAL	1	KMEM
UA-50-0100		NFPA REQUIRED SCOTCH-LITE STRIPING - SA AERIAL	1	KMEM
UA-50-0120		8" SCOTCH-LITE STRIPE ON CAB AND BODY - SA AERIAL	1	KMEM
UA-58-5100		WHITE SCOTCH-LITE	1	KMEM
UA-80-6000		REAR CHEVRON STRIPING	1	KMEM
UA-80-6002		50% VERTICAL SURFACE	1	KMEM
UA-80-6050		6" 50% REAR SCOTCH-LITE DIAMOND GRADE CHEVRON STRIPING	1	KMEM
UA-80-6075		RED & FLUORESCENT YELLOW GREEN DIAMOND GRADE SCOTCH-LITE	1	KMEM
		****** PROPOSED - AERIAL WARRANTY PKG, W/PUMP @ REAR OF SPEC**	**1**	**KMEM**
W6-00-000J		PROPOSED - KME WARRANTY, STARTING ON DELIVERY DATE	1	KMEM
W6-00-0010	**X** <	PROPOSED - 5 YEAR FCAM WARRANTY - CUSTOM CHASSIS	1	
		$16,500 per email Phil to Byron 9-27-16		
W6-00-003M	>	PROPOSED - 5 YEAR WARRANTY - BASE WITH CUSTOM CHASSIS	1	KMEM
W6-00-0150		PROPOSED - 5 YEAR CUMMINS BASE WARRANTY	1	KMEM
W6-00-0210		PROPOSED - 5 YEAR ALLISON EVS TRANSMISSION WARRANTY	1	KMEM
W6-00-0220		PROPOSED - 3 YEAR COOLING SYSTEM WARRANTY - CUSTOM	1	KMEM
W6-00-0230		PROPOSED - LIFETIME FRAMERAIL WARRANTY	1	KMEM
W6-00-0242		PROPOSED - SHEPPARD STEERING GEAR STANDARD - THREE YEAR WARRANTY	1	KMEM
W6-00-0254		PROPOSED - 5 YEAR MERITOR FRONT AXLE - WARRANTY	1	KMEM
W6-00-0258		PROPOSED - 5 YEAR MERITOR SINGLE AXLE REAR - WARRANTY	1	KMEM
W6-00-0320	>	PROPOSED - 10 YEAR CAB STRUCTURAL WARRANTY	1	KMEM
W6-00-0330		PROPOSED - 10 YEAR BODY STRUCTURAL WARRANTY	1	KMEM
W6-00-0390		PROPOSED - 10 YEAR CAB & BODY CORROSION WARRANTY	1	KMEM
W6-00-0450		PROPOSED - PAINT FINISH WARRANTY, TEN (10) YEAR	1	KMEM
W6-00-0470		PROPOSED - 5 YEAR LETTERING WARRANTY	1	KMEM
W6-00-0490		PROPOSED - 10 YEAR STAINLESS STEEL PIPING WARRANTY	1	KMEM
W6-00-0500		PROPOSED - REAR SUSPENSION - LEAF SPRING - 1 YEAR WARRANTY	1	KMEM
W6-00-0570		PROPOSED - SAFEGUARD TECHNOLOGY - 10 YEAR - RUNG COVERS	1	KMEM
W6-00-0590		PROPOSED - 20 YEAR AERIAL LADDER WARRANTY	1	KMEM
W6-00-0655	>	PROPOSED - TEN 10 YEAR AERIAL WATERWAY WARRANTY	1	KMEM
W6-00-0695		PRO - AERIAL DEVICE HYDRAULIC COMPONENT WARRANTIES	1	KMEM

PART NO	S	DESCRIPTION	QTY	ID
W6-00-0710		PROPOSED - LIFETIME POLY TANK WARRANTY - ALL TANKS	1	KMEM
W6-00-0820		PROPOSED - WATEROUS 5 YEAR PUMP WARRANTY (PARTS & LABOR)	1	KMEM
W6-00-0823	**X**	WATEROUS FCAM 5 YR WARRANTY CORRECTION	1	
W6-00-1153	**S**	DEALER PROVIDES WARRANTY TRANSPORT PROP and REQ	1	DLR
W6-00-1330		PROPOSED - AKRON - 5 YEAR LIMITED WARRANTY	1	KMEM
W6-00-1340		PROPOSED - AKRON HEAVY DUTY VALVE - 10 YEAR WARRANTY	1	KMEM
W6-00-1530		PROPOSED - USSC SEATING 6 YEAR WARRANTY	1	KMEM
WA-00-0010		"AERIAL FIRE APPARATUS" NFPA 2016 STATEMENT OF EXCEPTIONS	1	KMEM

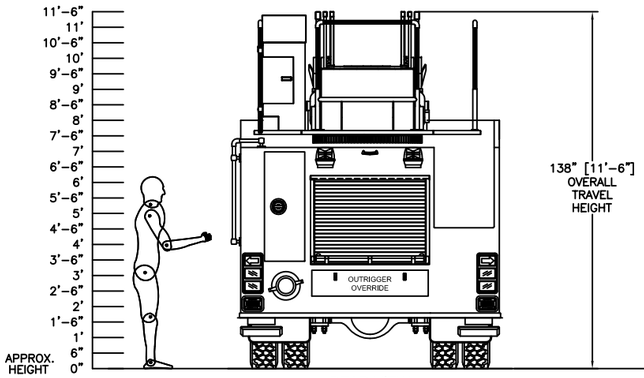

REAR VIEW

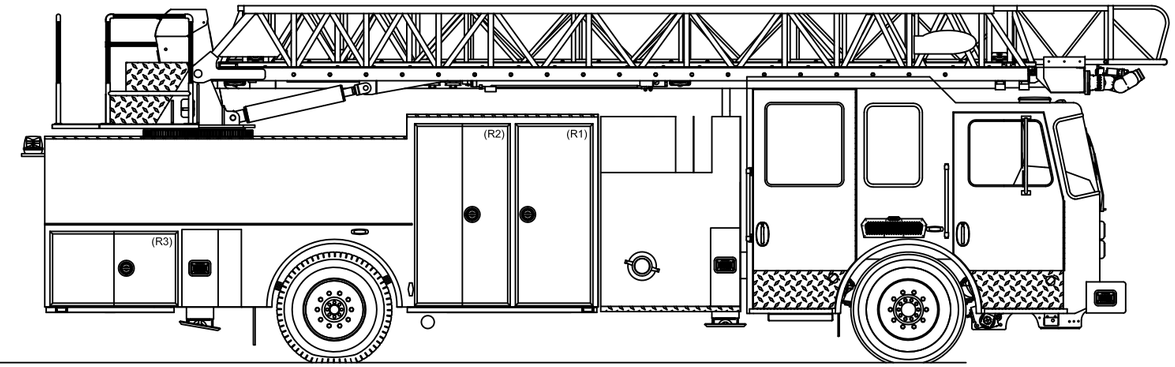

OFFICERS SIDE VIEW

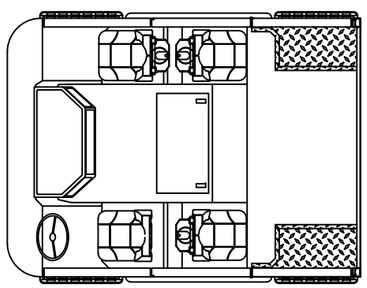

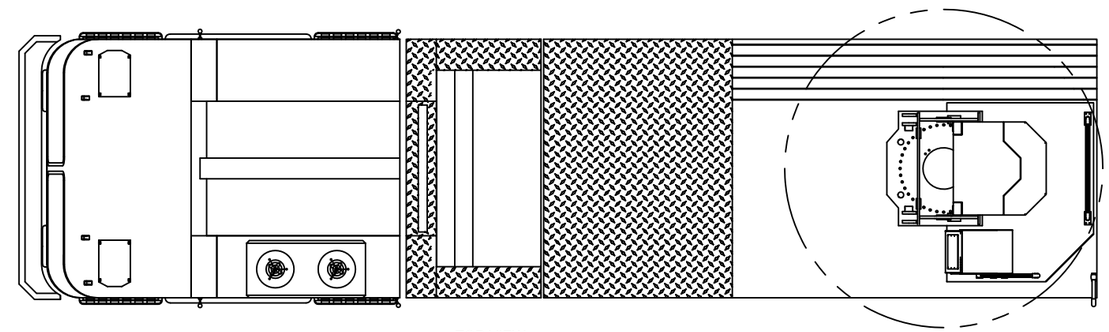

TOP VIEW

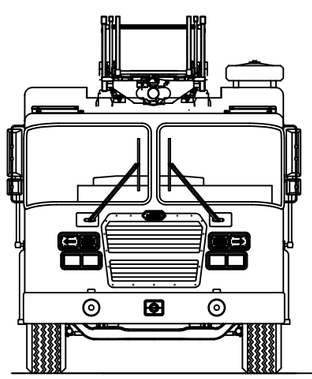

FRONT VIEW

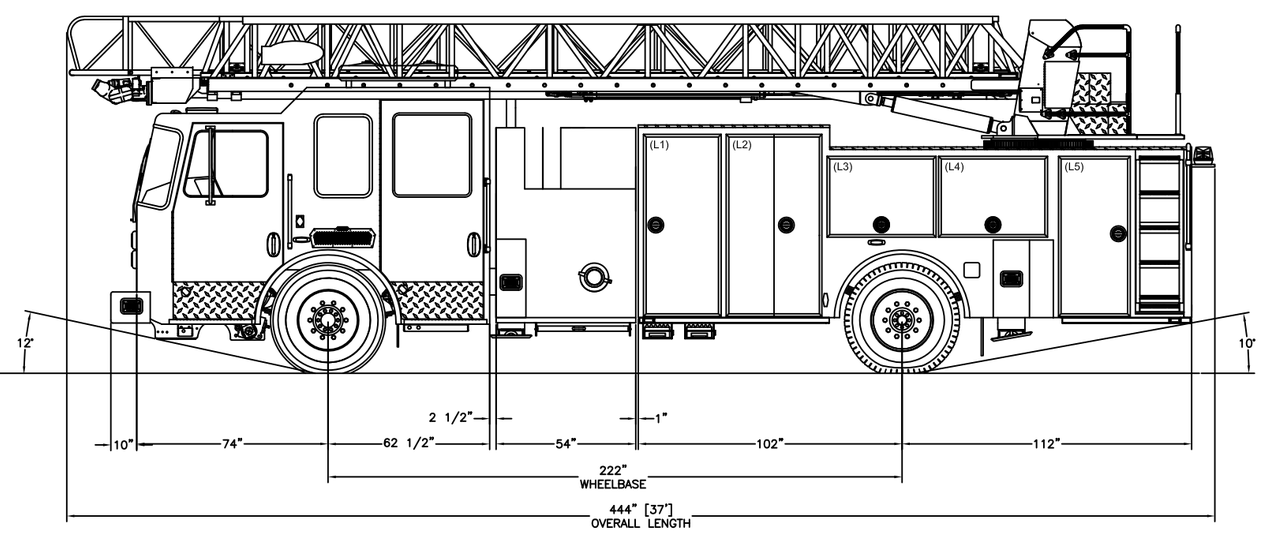

DRIVERS SIDE VIEW

CAB: 100"W PREDATOR MFD 10" RAISED ROOF
ENGINE & TRANS. CUMMINS ISL 400 HP/ 3000 EVS
AXLES: 23,000# FRONT/33,500# REAR
PUMP: WATEROUS CSU-C20; 1,750 GPM SINGLE STAGE
WATER TANK: 300 GALLONS

THIS DRAWING IS A GENERAL CONFIGURATION AND MAY NOT NECESSARILY REFLECT ALL CONTRACTUAL REQUIREMENTS. CONTRACT SPECIFICATIONS SHALL PREVAIL OVER DRAWING.

CUSTOMER APPROVAL:

NAME:

TITLE:

DATE:

SYM	DATE	REVISION DESCRIPTION	APP'D

SALES ENGINEER : TBD

DIMENSIONS ARE APPROXIMATE & MAY VARY DUE TO BUILD ADJUSTMENTS

SCALE	DWG SIZE	DRAWN BY	Z.ZSCHUNKE	DATE
NONE	B	APPROVED BY	P.HOHERCHAK	9-22-16

79' REAR MOUNT LADDER

MAPC 11 MID RANGE

PROPOSAL DRAWING

KME
REV GROUP
ONE INDUSTRIAL COMPLEX - NESQUEHONING, PA 18240

KME

FCAM MID RANGE REAR

MOUNT 109 FOOT AERIAL

LADDER “QUINT”

MAPC 12

Quote SO

MAPC/FCAM

MAPC 12 MID RANGE 109' REAR MOUNT AERIAL QUI

Sales Rep:

Terms:

Drawing #:
Est. Delivery Date: / /
Customer PO #:
Customer #:
QPF #:

Penalty:

Quote No: 10088-0020
10/04/2016

PART NO	S	DESCRIPTION	QTY	ID
		== REAR MOUNT LADDER - 713.016 07/13/16 ==	**1**	**KMEM**
		== LETTERING & STRIPING, 109-4-RM - 713.016 07/13/16 ==	**1**	**KMEM**
		== COMPARTMENT ACCESSORIES REARMOUNT AERIAL - 713.016 07/13/16 ==	**1**	**KMEM**
		== MISC AND LOOSE EQUIPMENT (AERIAL) - 713.016 07/13/16 ==	**1**	**KMEM**
		== AERIAL WARRANTY PACKAGE W/PUMP - 713.016 07/13/16 ==	**1**	**KMEM**
		DEALER ======= DEALER ======= DEALER	**1**	**DLR**
		QUOTE DATA VERSION: 0713.016 - 2016 DATA SET	**1**	**KMEM**
		INDEX OF PART NUMBERS	**1**	**KMEM**
		****** HEADER - CONTRACTS, PROPOSAL FORM, ETC @ FRONT OF SPECS**	**1**	**KMEM**
		****** PROPOSED - AERIAL SPEC BOILERPLATE**	**1**	**KMEM**
04-00-0000		PROPOSED - GENERAL INFORMATION - NFPA 1901	1	KMEM
04-00-0033		PROPOSED - COMPLETION INFO	1	KMEM
04-00-0040		PROPOSED - FMVSS CERTIFICATION	1	KMEM
04-00-0060		PROPOSED - RECORDS	1	KMEM
04-00-0075		PROPOSED - TOP OF THE LINE CHASSIS MULTIPLEX	1	KMEM
04-00-0107		PROPOSED - GENERAL CONSTRUCTION - AERIAL	1	KMEM
04-00-0120		PROPOSED - SINGLE LINE RESPONSIBILITY	1	KMEM
04-00-0130		PROPOSED - PRODUCT LIABILITY - $30,000,000.00	1	KMEM
04-00-0170		PROPOSED - CRITERIA & CODE CONFORMANCE - AERIAL	1	KMEM
04-00-0193		PROPOSED - PAINT PERFORMANCE CERTIFICATION	1	KMEM
04-00-0200		PROPOSED - AFTERMARKET SUPPORT WEBSITE	1	DLR
04-00-0490		PROPOSED - PRICES & PAYMENTS	1	KMEM
04-00-0540		PROPOSED - BOND REQUIREMENTS	1	KMEM
04-00-0560		PROPOSED - PERFORMANCE BOND	1	KMEM
04-00-0580		PROPOSED - NON-COLLUSION AGREEMENT	1	KMEM
04-00-0630		PROPOSED - MATERIAL & WORKMANSHIP	1	KMEM
04-00-0660		PROPOSED - CONTRACT SPECIALIST	1	KMEM
04-00-0680		PROPOSED - APPROVAL DRAWING	1	KMEM
04-00-1200		PROPOSED - DELIVERY	1	KMEM
04-00-1215		PROPOSED - INSTRUCTION MANUALS, TWO (2) SETS - CD	1	KMEM
04-00-1215	**X**	POWERPOINT DELIVERY - PROPOSAL FCAM AERIAL	1	
04-00-1300		PROPOSED - VEHICLE FLUIDS PLATE	1	KMEM

PART NO	S	DESCRIPTION	QTY	ID
04-00-1500		PROPOSED - MANUFACTURE GENERATED EXACT BLUEPRINT WITH BID	1	KMEM
04-00-1521	X	PROPOSED - KME and BULLDOG FAMA MEMBERSHIP	1	
04-00-1540		PROPOSED - MANUFACTURED IN THE UNITED STATES	1	KMEM
04-00-1550		PROPOSED - ISO 9001 QUALITY MANAGEMENT SYSTEM	1	KMEM
04-00-1570		PROPOSED - NFPA TREAD PLATE CERTIFICATION	1	KMEM
04-00-1605		PROPOSED - AMP DRAW REPORT	1	KMEM
04-00-2440		PROPOSED - UNDERWRITERS LABORATORIES (UL) TESTING - AERIAL	1	KMEM
04-00-2445		PROPOSED - UNDERWRITERS LABORATORIES (UL) TESTING - FCAM	1	DLR
07-00-0015		"AERIAL FIRE APPARATUS" NFPA 2016 CHAPTERS OF COMPLIANCE	1	KMEM
08-00-0000		VEHICLE DATA PLATE DESCRIPTION	1	KMEM
14-00-0000		NFPA ROLLOVER STABILITY GENERAL STATEMENT	1	KMEM
15-00-0010	>	PROPOSED - PRINCIPAL APPARATUS DIMENSIONS & GVWR	1	KMEM
15-00-0050		!!! CRITICAL OVERALL HEIGHT REQUIREMENT !!! - "NO"	1	KMEM
15-00-0150		!!! CRITICAL OVERALL LENGTH REQUIREMENT !!! - "NO"	1	KMEM
AA-00-002A		SERVICE CENTER - PROPOSAL FCAM	1	DLR
BA-00-0045		<1> 109-MD-TA AERIALCAT LADDER	1	KMEM
BA-00-3000		SEAT AND SEAT BELT ANCHOR TESTING	1	KMEM
BA-02-0335		<2> RM PREDATOR - TANDEM AXLE - MD 109' RM	1	KMEM
BA-02-2305		<3> 140" TRAVEL HEIGHT - 109' MD	1	KMEM
BA-03-1420		<4> HI BODY, 109-HD-TA WITH PUMP	1	KMEM
BA-04-0555		AERIAL CHASSIS, REAR MOUNT PREDATOR -TANDEM AXLE (MEDIUM)	1	KMEM
		****** HEADER - 100" PREDATOR CAB ******	**1**	**KMEM**
BA-04-0805		PREDATOR CAB - BASE, 100"	1	KMEM
BA-04-0850		PREDATOR CAB - BASE - ALUMINUM CONSTRUCTION	1	KMEM
BA-04-0990		PREDATOR 100" - CRASH TESTING	1	KMEM
BA-04-0995		PREDATOR 100" - 120,000# ROOF & SIDE TESTING	1	KMEM
BA-04-1300		PREDATOR 100" - MFD CAB LENGTH (DIM - 62 1/2")	1	KMEM
BA-04-1900		PREDATOR 100" - VISTA DIMENSIONS FRONT SEATING & ENGINE ENCLOSURE	1	KMEM
BA-04-4510		2010 - RM 10" RAISED ROOF 4" CENTER NOTCH & 2" WATERWAY NOTCH	1	KMEM
BA-05-0260		BATTERY ACCESS DOORS - REAR STEP WELLS, EACH SIDE	1	KMEM
BA-05-0610		BARRIER HEIGHT CAB DOORS, 100" PREDATOR "MFD, LFD & X-LFD"	1	KMEM
BA-05-0650		CAST ANTI-SLIP ENTRY STEPS FOR REDUCED LENGTH CAB DOORS	1	KMEM
BA-05-0700		CAB DOORS - BOLT ON WEATHER STRIP	1	KMEM
BA-05-1015		PREDATOR DOOR LATCHES, HD LOOP STYLE LATCH - BARRIER HEIGHT DOORS	1	KMEM
BA-05-1035		LOCKING CAB DOOR , OUT + IN, LOOP STYLE LATCH	1	KMEM
BA-05-1037		KEY MODEL #2001	1	KMEM
BA-05-1103		WINDOWS, MANUAL HAND CRANK STYLE - 100"	1	KMEM
BA-05-1130		DOOR WINDOW TRIM EXTRUSION, 4 - DOOR	1	KMEM
BA-05-1340		FULL HEIGHT INTERIOR DOOR PANELS - BRUSH STAINLESS, 4 - DOOR	1	KMEM
BA-05-1510		SCOTCHLITE MATERIAL ON INTERIOR OF DOOR PANEL 4-DOORS	1	KMEM
		****** HEADER - CAB EXTERIOR ACCESSORIES & OPT, 100" PREDATOR**	**1**	**KMEM**
BA-05-2410		WINDSHIELD, 100" PREDATOR CAB	1	KMEM
BA-05-2425		WINDSHIELD WIPERS & WASHERS - 100" PREDATOR	1	KMEM
BA-05-2450		SIDE VIEWING WINDOWS NON-SLIDING - PREDATOR	1	KMEM
BA-05-2500		DARK TINT WINDOWS, SIDE VIEWING, REAR DOORS & REAR WALL	1	KMEM
BA-05-2600		GRAB RAILS EXTERIOR, KNURLED ALUMINUM EXTRUSION	1	KMEM
BA-05-2668		PREDATOR INTERIOR GRAB HANDLES - WHEELABRATED	1	KMEM
BA-05-2692		INTERIOR "A" POST GRAB HANDLE "PREDATOR" - WHEELABRATED	1	KMEM
BA-05-2725		FRONT CAB GRILLE - SHAPED PERFORATED POLISHED STAINLESS, 100" PRED, SS, PANTHER	1	KMEM
BA-05-2825		SIDE CAB GRILLES -SHAPED SHAPED PERFORATED POLISHED STAINLESS, 100" PRED, SS, PA	1	KMEM
BA-05-2900		ALUMINUM CAB WHEEL LINERS	1	KMEM
BA-05-2910		ALUMINUM CAB FENDERETTES	1	KMEM
BA-05-3000		FRONT MUD FLAPS	1	KMEM
BA-05-3500		VELVAC MIRRORS " WEST COAST" HEATED / REMOTE - W/CONVEX SPOT	1	KMEM
BA-05-3690		MIRROR CONTROL IN MULTIPLEX CONTROL SCREEN	1	KMEM
BA-05-5115		INTERIOR TRIM, 100" PREDATOR	1	KMEM

PART NO	S	DESCRIPTION	QTY	ID
BA-05-5180		CUSTOM CAB INTERIOR PAINT - TEXTURED GRAY	1	KMEM
BA-05-5200		PREDATOR REAR INTERIOR CAB WALL, GRAY DURAWEAR UPHOLSTERY	1	KMEM
BA-05-5335		TREAD PLATE KICK PLATE ON LOWER INTERIOR REAR WALL	1	KMEM
BA-05-5530	>	STORAGE COMPARTMENTS UNDER FRONT SEATS - 100" PREDATOR	1	KMEM
BA-05-5610		BARYFOL FLOORING	1	KMEM
BA-05-5650		1" ACOUSTICAL INSULATION	1	KMEM
BA-05-5824		ENGINE ENCLOSURE 100" PREDATOR FAB DASH (DURAWEAR)	1	KMEM
BA-05-5860		ENGINE ENCLOSURE MATERIAL - ALUMINUM CAB	1	KMEM
BA-05-7040		SUN VISORS, 100" PREDATOR CAB, PADDED VINYL	1	KMEM
BA-06-0400	>	DELETED - TOP ROLLOVER PROTECTION SYSTEM	1	KMEM
		****** HEADER - CAB SEATING & ACCESSORIES, 100" - PREDATOR MFD**	**1**	**KMEM**
		****** SEATING OPTIONS USSC, 100" - PREDATOR - MFD - NON ROLLTEK**	**1**	**KMEM**
BA-06-329H		DRIVERS SEAT, USSC AIR SUSPENSION, ABTS	1	KMEM
BA-06-389K		OFFICERS SEAT, USSC - FIXED BASE, SCBA, ABTS	1	KMEM
BA-06-3910		ZICO ULLH SCBA BOTTLE BRACKET - OFFICER'S SEAT	1	KMEM
		MFD CAB - REAR FACING USSC SEATS - NON ROLLTEK	**1**	**KMEM**
BA-06-414H		USSC SCBA ABTS REAR FACING, OUTBOARD, DS	1	KMEM
BA-06-4180		ZICO ULLH SCBA BOTTLE BRACKET - OUTBOARD, DS	1	KMEM
BA-06-424H		USSC SCBA ABTS REAR FACING, OUTBOARD, OS	1	KMEM
BA-06-4280		ZICO ULLH SCBA BOTTLE BRACKET - OUTBOARD, OS	1	KMEM
		MFD CAB - FORWARD FACING USSC SEATS - NON ROLLTEK	**1**	**KMEM**
BA-06-7200		**** DELETE FORWARD FACING SEAT RISER - NOT REQUIRED	1	KMEM
BA-06-8055		NO SCBA PARADE COVERS SUPPLIED	1	KMEM
BA-06-8150		USSC SEATING MATERIAL - BLACK CORDURA	1	KMEM
		****** HEADER - VEHICLE DATA RECORDER SYSTEMS**	**1**	**KMEM**
BA-06-9103	>	CLASS ONE SEAT BELT WARNING SYSTEM - UP TO 6 POSITIONS - ULTRAVIEW DISP	1	KMEM
BA-06-9115		FOUR (4) SEATING POSITIONS	1	KMEM
BA-06-9250	>	HELMET HOLDERS - IN CAB - ZICO	4	KMEM
BA-06-9310		CLASS ONE VEHICLE DATA RECORDER - MULTIPLEX	1	KMEM
		****** HEADER - CAB INTERIOR ACCESSORIES & OPTIONS, 100" PREDATOR**	**1**	**KMEM**
BA-07-7010	>	STANDARD #MATM RADIO ANTENNA INSTALLED	1	KMEM
		****** HEADER - INSTRUMENTATION & CONTROLS, 100" PREDATOR - NARROW VISTA**	**1**	**KMEM**
BA-08-0214		DASH & CENTER CONSOLE - 100" PREDATOR FAB DASH (UPHOLSTERED)	1	KMEM
BA-08-0275		INSTRUMENT PANEL, 100" PREDATOR - NARROW	1	KMEM
BA-08-0300		INTER AXLE LOCK CONTROL SWITCH	1	KMEM
BA-08-0315		DIESEL EXHAUST FLUID LEVEL GAUGE	1	KMEM
BA-08-0320		ENGINE COMPRESSION BRAKE CONTROLS	1	KMEM
BA-08-0620		ULTRAVIEW 450 DISPLAY ON CAB DASH FOR ES-KEY SYSTEM	1	KMEM
BA-08-1220		INDICATOR CLUSTER, 100" PREDATOR	1	KMEM
BA-08-1225		"INTER AXLE LOCK" INDICATOR CLUSTER	1	KMEM
BA-08-1235		"ATC DISABLED" INDICATOR CLUSTER	1	KMEM
BA-08-1240		"ATC ACTIVE" INDICATOR CLUSTER	1	KMEM
BA-08-1265		"OUTRIGGERS NOT STOWED" INDICATOR ON DASH	1	KMEM
BA-08-1810	>	AUXILIARY SWITCH PANEL - LOWER DASH AREA	1	KMEM
BA-08-1900		PUMP SHIFT CONTROL ON LOWER LEFT DASH PANEL	1	KMEM
BA-08-1950		MULTIPLEX CONTROL PUMP SHIFT SWITCH - MULTIPLEX	1	KMEM
BA-08-2000		AERIAL LADDER, LADDER POWER/PTO SWITCHES IN CAB	1	KMEM
BA-08-2750		PREDATOR COMPUTER TERMINAL IN FRONT OF OFFICER (FABRICATED)	1	KMEM
BA-08-2905		OVERHEAD ABS PANEL, FLAT FACED, 100" PREDATOR	1	KMEM
BA-08-4405		RM HEATER/ DEFROSTER & ACCESS, PREDATOR 10" RR W/TWO NOTCH	1	KMEM
BA-08-6900		HVAC CONTROL SYSTEM - INCOPORATED INTO MULTIPLEX CONTROL DISPLAY	1	KMEM
BA-08-9000		CAB TILT SYSTEM & OPTIONS	1	KMEM
BA-08-9010	>	AUXILIARY - MANUAL CAB LIFT BACKUP SYSTEM	1	KMEM
BA-08-9110		PARKING BRAKE/CAB TILT INTERLOCK	1	KMEM
		FRAME & AXLE PACKAGE, TANDEM AXLE CHASSIS (MEDIUM)	**1**	**KMEM**
BA-09-5200		110,000 PSI FRAME: AERIAL CHASSIS TRIPLE FRAME	1	KMEM
		HEADER - FRONT BUMPER, EXTENSIONS & ACCESSORIES	**1**	**KMEM**

PART NO	S	DESCRIPTION	QTY	ID
BA-10-0057	>	BUMPER 12" PAINTED 3/8" STEEL BUMPER - ALL CABS	1	KMEM
BA-10-0100	>	6" FRONT BUMPER EXTENSION WITH TREAD PLATE GRAVEL SHIELD	1	KMEM
BA-10-0405		TREADPLATE GRAVEL SHIELD STANDARD INSTALLATION	1	KMEM
BA-10-2010		TWO (2) PAINTED TOW HOOKS BELOW FRONT BUMPER	1	KMEM
BA-10-5000		AERIAL TRAVEL SUPPORT FOR ANY REAR MOUNT TYPE AERIAL	1	KMEM
BA-14-0170		23,000# FRONT AXLE MERITOR MFS-20-133A-N	1	KMEM
BA-14-1110		MERITOR, EX-225 17" DISC BRAKES, FRONT AXLE, W/ AUTO SLACK ADJUSTMENT	1	KMEM
BA-14-2040		SUSPENSION FRONT - 23,000# AXLES	1	KMEM
BA-14-2095		**AERIAL DEVICE TRAVEL HEIGHT CRITICAL!!!! ** REQUIRES SMALL AXLE SPACER	1	KMEM
BA-14-2110		FRONT AXLE SHOCK ABSORBERS - MONROE "MAGNUM - 70"	1	KMEM
BA-15-1050		54,000# TANDEM REAR AXLE MERITOR RT-52-185	1	KMEM
BA-15-1505		16.5" X 8.6" S-CAM BRAKES - MERITOR REAR TANDEM W/ AUTO SLACK ADJ.	1	KMEM
BA-15-2810		VEHICLE TOP SPEED - 2016 NFPA STATEMENT	1	KMEM
BA-15-4690	>	CHALMERS SUSPENSION FOR TANDEM AXLE MODELS, 54,000# MAX.	1	KMEM
		****** HEADER - BRAKE SYSTEM, TANDEM AXLE VEHICLE**	**1**	**KMEM**
BA-20-1005		BRAKE SYSTEM, TA CHASSIS	1	KMEM
BA-20-1110		ABS BRAKING FOR TANDEM REAR AXLE CHASSIS	1	KMEM
BA-20-1275	>	ELECTRONIC STABILITY CONTROL (ESC) WITH (ATC) - CUSTOM TA	1	KMEM
BA-20-1530		AIR RESERVOIRS 7100 CU IN TA, BASE	1	KMEM
BA-20-2025		1/4 TURN DRAIN VALVES ON ALL AIR TANKS	1	KMEM
BA-20-3010		ROCKWELL/WABCO SYSTEM SAVER #1200, AIR DRYER HEATED	1	KMEM
BA-20-5005		COLOR CODED SYNFLEX BRAKE LINES W/QUICK RELEASE FITTINGS - TA	1	KMEM
BA-20-5500		AIR COMPRESSOR -WABCO 18.7 CFM- STD. FOR ALL CUMMINS ENGINES	1	KMEM
BA-20-5810		BRAKE TREADLE VALVE	1	KMEM
BA-20-6010		PARKING BRAKE CONTROL - NEAR DRIVER - ALL WHEEL LOCK	1	KMEM
		HEADER, TIRE AND WHEEL OPTIONS	**1**	**KMEM**
		HEADER, WHEELS, 23,000 FRONT AXLE - ALUMINUM	**1**	**KMEM**
BA-25-1010		FRONT WHEELS, MILL ALUMINUM DISC TYPE - PAINTED 22.5 X 13, 24,390#	1	KMEM
BA-25-1025		FRONT WHEELS, STAINLESS STEEL SIMULATOR KIT (2)	1	KMEM
BA-25-2030	>	FRONT, GOODYEAR 425/65R22.5 L 24,400# G296 MSA MIXED - 68MPH	1	KMEM
BA-25-2400		GOODYEAR - FIRE SERVICE RATING - TIRE RESTRICTIONS	1	KMEM
		HEADER, TIRES & WHEELS, 54,000 TANDEM REAR AXLE	**1**	**KMEM**
BA-25-5015	>	REAR WHEELS, STEEL DISC TYPE, 22.5 X 9, TA	1	KMEM
BA-25-5050		REAR WHEELS, STAINLESS STEEL SIMULATOR KIT, TA	1	KMEM
BA-25-7055	>	REAR, GDYR 315/80R22.5 J 64,000# RHD II+ TRACTION - 75MPH, TA	1	KMEM
BA-25-7400		GOODYEAR - FIRE SERVICE RATING - TIRE RESTRICTIONS	1	KMEM
BA-25-9905		TIRE PRESSURE MONITORING - LED VALVE STEM CAPS - TEN TIRES	1	KMEM
		100" PREDATOR - ENGINE PACKAGE, HEAVY TANDEM AXLE CHASSIS	**1**	**KMEM**
		****** 100" - HEADER, ENGINE & ENGINE COMPONENTS**	**1**	**KMEM**
BA-30-3195	>	CUMMINS ISX12 - 450 HP @ 1800 RPM TQ 1550 lb-ft @ 1100 - PREDATOR NARROW	1	KMEM
BA-30-9810		PROPOSED - ENGINE CERTIFICATION CUSTOM CHASSIS	1	KMEM
BA-32-0035		COOLING/RADIATOR, 100" PREDATOR - NARROW	1	KMEM
BA-32-0070		ENGINE COOLANT FILTER - CUMMINS ISC - ISX	1	KMEM
BA-32-0085		COOLING SYSTEM CRITERIA	1	KMEM
BA-32-0100		TRANSMISSION COOLER	1	KMEM
BA-32-0120		RADIATOR SKID PLATE	1	KMEM
BA-32-0160		CHARGED AIR COOLER (FRONT MOUNT)	1	KMEM
BA-32-0245		COOLANT FAN, W/CLUTCH - CUMMINS ISX12	1	KMEM
BA-32-0340		HEATER AND COOLANT HOSES/PIPING	1	KMEM
BA-32-0420		LOW COOLANT INDICATOR LIGHT AND ALARM IN CAB	1	KMEM
BA-33-0020	>	SECONDARY BRAKING - ENGINE COMPRESSION BRAKE	1	KMEM
BA-33-0150		FAST IDLE CONTROL FOR ALL ELECTRONIC ENGINES - SMART WHEEL	1	KMEM
BA-33-0160		ENGINE AIR CLEANER	1	KMEM
BA-33-0180		SPARK ARRESTOR	1	KMEM
BA-33-0200		ACCELERATOR PEDAL - FLOOR MOUNT	1	KMEM
BA-33-0250		REMOTE THROTTLE & INTERLOCK HARNESS	1	KMEM

PART NO	S	DESCRIPTION	QTY	ID
BA-40-0300		ALLISON 4000EVS TRANS. - COMPRESSION BRAKE	1	KMEM
BA-40-0660		FIVE (5) SPEED AUTOMATIC TRANSMISSION - 4000 SERIES	1	KMEM
BA-40-0700		ALLISON TRANSMISSIONS, ELECTRONIC TOUCH PAD SHIFTER IN CAB	1	KMEM
BA-40-0855		TRANSMISSION OIL LEVEL SENSOR	1	KMEM
BA-40-0860		ALLISON PARK TO NEUTRAL	1	KMEM
BA-40-0910		ALLISON PRESELECT PROGRAMMING	1	KMEM
BA-40-0920		PRESELECT PROGRAMMED FOR 4TH GEAR	1	KMEM
BA-40-4720		TES-389 TRANS FLUID 4000EVS TRANSMISSION	1	KMEM
BA-45-0110		DRIVE LINES DANA-SPICER #1810 SERIES	1	KMEM
BA-49-0100		DIESEL EXHAUST FLUID TANK - 5 GALLON	1	KMEM
BA-50-0110		EXHAUST SYSTEM - DPF & SCR SYSTEM - INLINE SYSTEM	1	KMEM
BA-50-0155		ALUMINIZED STEEL EXHAUST TAILPIPE/OUTLET OS - DPF + SCR SYSTEM	1	KMEM
BA-50-2500		FUEL SYSTEM	1	KMEM
BA-50-2510		FUEL TANK - 65 GALLON, STEEL	1	KMEM
BA-50-2625		FUEL LINES - FIBER REINFORCED HOSE	1	KMEM
BA-50-2645	>	CUMMINS FUEL-WATER SEPARATOR	1	KMEM
BA-50-2670		FUEL PUMP SECONDARY ELECTRIC, REQ. ON 210" W-B OR LONGER	1	KMEM
BA-50-2700		FUEL POCKET, LEFT SIDE REAR WHEEL WELL PANEL	1	KMEM
BA-50-5050	>	STEERING - DUAL SHEPPARD POWER STEERING GEARS	1	KMEM
BA-50-7115		STEERING COLUMN - CLOCK SPRING "NARROW"	1	KMEM
BA-50-7155		18" STEERING WHEEL - 4 SPOKE - "NARROW"	1	KMEM
BA-50-7170		SMART WHEEL CONTROLS ON STEERING WHEEL	1	KMEM
BA-50-9000		ROAD SAFETY KITS	1	KMEM
		****** HEADER, RM LADDER CHASSIS ELECTRICAL, 100" PREDATOR (OPTIONS)**	**1**	**KMEM**
		****** HEADER, RM LADDER W/ PUMP BODY ELECTRICAL (OPTIONS)**	**1**	**KMEM**
BE-01-0005		PREDATOR CHASSIS ELECTRICAL SYSTEM DESCRIPTION	1	KMEM
BE-01-0105		PREDATOR CHASSIS WIRING INSTALLATION	1	KMEM
BE-01-0150		DIRECT BATTERY GROUNDING STRAP - PREDATOR	1	KMEM
BE-01-0153		EMI/RFI PROTECTION	1	KMEM
BE-01-0205		PREDATOR 12 VOLT ELECTRICAL SYSTEM TESTING	1	KMEM
BE-05-0353		CLASS-1 ES-KEY MULTI-PLEXED ELECTRICAL SYSTEM 100" PREDATOR	1	KMEM
BE-05-0450		CLASS-1 ES-KEY ULTRAVIEW 450 DISPLAY	1	KMEM
BE-05-0800		INTER-LOCK MODULE FOR MULTIPLEX SYSTEM	1	KMEM
BE-05-0900		CHASSIS DIAGNOSTICS SYSTEM	1	KMEM
BE-05-1160		VOLTAGE MONITORING SYSTEM - 12 VOLT	1	KMEM
BE-05-1165		INDICATOR LIGHT AND ALARM PROVE-OUT SYSTEM	1	KMEM
BE-05-1170		SEQUENCER	1	KMEM
BE-05-1175		ELECTRICAL HARNESS INSTALLATION - 12 VOLT	1	KMEM
BE-10-0420		LEECE NEVILLE 320 AMP 4962PA - ALTERNATOR	1	KMEM
BE-15-0680		BATTERIES - FIVE (5) EXIDE GROUP 31, 925CCA	1	KMEM
BE-15-1105		PREDATOR BATTERY STORAGE, STEEL, MFD, XMFD, LFD, XLFD	1	KMEM
BE-15-1500		BATTERY DISCONNECT SWITCH, ALL UNITS	1	KMEM
BE-15-1555		COLE HERSEE BATTERY JUMPER STUDS, DS BATTERY BOX	1	KMEM
BE-20-1600		12 VOLT POLARIZED CHARGE RECEPTACLE	1	KMEM
BE-20-1715		SHORELINE RECEPTACLE LABEL - NFPA	1	KMEM
BE-20-1750		SHORELINE LOCATION - ADJACENT TO DRIVER'S DOOR	1	KMEM
BE-30-0100		CONTROL SWITCHING - EATON MULTIPLEX SWITCHES - 12 ABOVE DRIVER	1	KMEM
BE-30-0120		CONTROL SWITCHING - EATON MULTIPLEX SWITCHES - 9 LOWER PANEL	1	KMEM
BE-30-2500		CONTROL SWITCHING LABELING	1	KMEM
BF-00-0515		WELDON #8080-8000-13 WHITE/RED LED INTERIOR LIGHTS (4)	1	KMEM
BF-00-5000		DOOR OPEN INDICATOR W/ INTEGRAL AUDIBLE ALARM	1	KMEM
		****** HEADER, 12V POWER/ USB CHARGING/ POWER - GROUND CIRCUITS, CUSTOM ******	**1**	**KMEM**
BF-01-1020	>	12 VOLT POWER PORT LOCATED IN CAB AS DIRECTED	1	KMEM
BF-01-4200	>	KUSSMAUL USB CHARGING PORT LOCATED IN CAB AS DIRECTED	1	KMEM
BF-01-6000		12 VOLT POWER AND GROUND CIRCUIT FOR ACCESSORIES IN DASH	1	KMEM
BF-01-6020		12 VOLT POWER AND GROUND CIRCUIT, BEHIND OFFICERS SEAT	1	KMEM
		****** HEADER, REAR/SIDE VISION CAMERA SYSTEMS ******	**1**	**KMEM**
BF-20-0000		DUAL HEADLIGHTS, HALOGEN, PREDATOR - DUAL BEZELS	1	KMEM

PART NO	S	DESCRIPTION	QTY	ID
BF-20-0320		DAYTIME RUNNING LIGHTS, ALL CABS	1	KMEM
BG-00-0055		DUAL MODULE w/ CODE 3 65STA LED TURN SIGNAL & REQ WARN LIGHT	1	KMEM
BG-00-0400		CUST RM LADDER CHASSIS LED MARKER LIGHTS	1	KMEM
BG-00-0500		CUST RM LADDER BODY LED MARKER LIGHTS	1	KMEM
BG-00-1210		WELDON #9186 LED MARKER LIGHTS @ FRONT ROOF EDGE OF CAB	1	KMEM
BG-00-1600		TRUCK-LITE MARKER LIGHTS @ EA SIDE OF CAB, ADJACENT TO DRIVER DOOR	1	KMEM
BG-00-1610		TRUCK-LITE MARKER/TURN LIGHTS @ EA SIDE OF BODY	1	KMEM
BG-00-1660		TRUCK-LITE MARKER LIGHTS @ REAR OF BODY	1	KMEM
BG-00-1800		TRUCK-LITE DOT AMBER REFLECTORS @ SIDE OF BODY	1	KMEM
BG-00-1810		TRUCK-LITE DOT RED REFLECTORS @ REAR OF BODY	1	KMEM
BG-00-2915		TECNIQ #L10 LED LICENSE PLATE LIGHT @ DS REAR OF BODY	1	KMEM
BG-02-2527		CODE 3, #65 LED BRAKE & TURN W/ HAL REVERSE TRI HOUSING	1	KMEM
BH-04-1050		CAB STEP LIGHTS, TECNIQ EON 3 LED, ALL DEVICES	4	KMEM
BH-04-1130		BODY STEP LIGHTS, TECNIQ EON 3 LED, ALL DEVICES	4	KMEM
BH-05-1625		DUNNAGE AREA LIGHTING, TECNIQ EON 3 LED	1	KMEM
BH-05-2300		AERIAL ACCESS LADDER ILLUMINATION - WHELEN 3" LED - RM BODY	1	KMEM
	>	****** HEADER, HOSE BED LIGHTING ******	**1**	**KMEM**
BH-06-0100		UNITY HOSE BED LIGHTS, ALL DEVICES	1	KMEM
BH-06-2200		HOSE BED WORK LIGHT - SWITCH	1	KMEM
		****** HEADER, SCENE LIGHTS - CUSTOM CHASSIS ******	**1**	**KMEM**
		****** HEADER, SCENE LIGHTS - LADDER/PLATFORM W/ PUMP**	**1**	**KMEM**
BH-11-0500		NFPA (4) JW SPEAKER LED RECTANGLE GROUND LIGHTS, BELOW CAB DOORS	1	KMEM
BH-11-0560		GROUND LIGHTS, 2 LED BELOW PUMP PANEL RUNNING BOARD - RH	1	KMEM
BH-11-0585		GROUND LIGHTS, 2 LED, AT REAR BODY CORNERS - RH	1	KMEM
		****** HEADER, BROW AND CAB RADIUS LIGHTS - CUSTOM CHASSIS**	**1**	**KMEM**
		****** HEADER, TELESCOPING LIGHTS, REAR OF CAB - CUSTOM CHASSIS**	**1**	**KMEM**
BI-00-0200		AERIAL BODY ELECTRICAL SYSTEM	1	KMEM
BI-00-0205		AERIAL BODY ELECTRICAL JUNCTION COMPARTMENT	1	KMEM
BI-00-0210		REAR-MOUNT, AERIAL DEVICE ELECTRICAL JUNCTION COMPARTMENT	1	KMEM
BI-00-0525		BODY ELECTRICAL HARNESS - ES-KEY	1	KMEM
BJ-00-5115		PUMP ENCLOSURE WORK LIGHTS - TECNIQ LED	1	KMEM
BJ-00-5165		ENGINE COMPARTMENT WORK LIGHTS - TECNIQ LED	1	KMEM
		COMPARTMENT LIGHTS - AERIAL TANDEM AXLE	**1**	**KMEM**
BJ-02-1055	>	COMPT. LIGHTS, TECNIQ E18 LED	12	KMEM
		****** HEADER, 12V BODY FLOOD LIGHTING - RM LAD/PLAT/WT W/ PUMP ******	**1**	**KMEM**
		****** CUSTOM REAR MOUNT AERIAL NFPA WARNING LIGHT PACKAGE**	**1**	**KMEM**
BL-95-0000		NFPA COMPLIANT WARNING LIGHT PACKAGE - ALL UNITS	1	KMEM
BL-95-0100		LIGHT PACKAGE ACTUATION/CONTROLS - ALL UNITS	1	KMEM
BL-98-0000		WARNING LIGHT FLASH PATTERN - NFPA FLASH PATTERN	1	KMEM
BM-00-0200		CODE 3 UPPER PACKAGE - CUSTOM REAR MOUNT AERIAL	1	KMEM
BM-02-0072		A-UPPER, CODE 3 LED 2718NFPA1, RX 2700 18" PRIZM II BAR PAIR	1	KMEM
BM-02-1000		C-UPPER, CODE 3 HALOGEN 550 BEACONS, RED DRIVER, AMBER OFFICER	1	KMEM
BM-02-2000		B/D-UPPER REAR, COVERED BY LIGHTS IN ZONE C-UPPER	1	KMEM
BM-02-3000		B/D-UPPER FRONT, COVERED BY LIGHTS IN ZONE A-UPPER	1	KMEM
BM-07-0200		CODE 3 LOWER PACKAGE - CUSTOM REAR MOUNT AERIAL	1	KMEM
BM-09-0018	>	A-LOWER FRONT, CODE 3 65 SERIES LED	1	KMEM
BM-09-0098		A-LOWER FRONT MOUNTING, CUSTOM CHASSIS	1	KMEM
BM-09-1014	>	C-LOWER REAR, CODE 3 65 SERIES LED	1	KMEM
BM-09-2006	>	B/D-LOWER FRONT, CODE 3 65 SERIES LED	1	KMEM
BM-09-2098		B/D-LOWER FRONT MOUNTING, CUSTOM CHASSIS	1	KMEM
BM-09-3006	>	B/D-LOWER MID, CODE 3 65 SERIES LED	1	KMEM
BM-09-3506	>	B/D-LOWER SECONDARY MID, CODE 3 65 SERIES LED	1	KMEM
BM-09-4006	>	B/D-LOWER REAR, CODE 3 65 SERIES LED	1	KMEM
BM-15-0000		LIGHT PACKAGE NFPA CERTIFICATION - ALL UNITS	1	KMEM
		****** HEADER, OPTIONAL WARNING LIGHTS**	**1**	**KMEM**
		****** HEADER, AUDIBLE WARNING & COMMUNICATION EQUIPMENT**	**1**	**KMEM**
BW-00-0510		CHASSIS SINGLE ELECTRIC (DOT) HORN	1	KMEM
BW-00-0560		CODE 3, #CA278, BACK-UP ALARM - 87DBA	1	KMEM

PART NO	S	DESCRIPTION	QTY	ID
BW-00-5000	>	DUAL CHROME AIR HORNS	1	KMEM
BW-00-5100		DUAL AIR HORNS RECESSED IN FRONT BUMPER, STD	1	KMEM
BW-00-5200		AIR HORN CTRL - FOOT FOR OFFICER & STEERING WHEEL FOR DRIVER	1	KMEM
BW-01-0120		SIREN, WHELEN # 295HFS2, 100W - FLUSH MOUNT	1	KMEM
BW-01-1020		ONE (1) WHELEN SA315P SPEAKER	1	KMEM
		****** HEADER, PUMP, TANK & ACC, 109' MD 4-SECT, TA RM, X-HI**	**1**	**KMEM**
DC-00-2335		WATEROUS CSU-C20-1500 SINGLE STAGE PUMP	1	KMEM
DC-01-4600		WATEROUS PUMP PACKING	1	KMEM
DC-01-6210		WATEROUS "C20" PUMP DRIVE UNIT, ALL WATEROUS MID-SHIP PUMPS	1	KMEM
DC-01-6490		PUMP RATIO (HALE, WATEROUS OR DARLEY)	1	KMEM
DC-01-7140		WATEROUS AIR SHIFT	1	KMEM
DC-01-8590		PUMP SHIFT MANUAL OVERRIDE (HALE, WATEROUS OR DARLEY)	1	KMEM
DC-01-8615		WATEROUS PUMP SHIFT INDICATOR LIGHTS	1	KMEM
DC-01-9020		TRANSMISSION LOCK-UP (HALE, WATEROUS OR DARLEY)	1	KMEM
DC-02-1900		PUMP MOUNTS - MID-SHIP PUMPS	1	KMEM
DC-02-1990		PUMP INSTALLATION - CUSTOM	1	KMEM
		****** HEADER, WATEROUS CSU, CMU, PRESSURE CONTROL**	**1**	**KMEM**
DC-05-1225		FIRE RESEARCH "IN CONTROL" TGA-300 PRESSURE GOVERNOR	1	KMEM
DC-05-1295		TASK FORCE TIPS #A18 SERIES INTAKE RELIEF VALVE	1	KMEM
DC-05-2500		PUMP UL CERTIFICATION - 750 GPM & UP	1	KMEM
		WATEROUS, PUMP PRIMING PUMP AND CONTROLS	**1**	**KMEM**
DC-05-3680	>	TRIDENT "MANUAL" AIR PRIMING SYSTEM	1	KMEM
		WATEROUS, DRAINS & ACCESSORES	**1**	**KMEM**
DC-05-5110		ROTARY MASTER DRAIN VALVE	1	KMEM
DC-05-5400		DRAINS/BLEEDER "INNOVATIVE CONTROLS" LIFT UP @ ALL 1-1/2" OR LARGER	1	KMEM
DC-05-5500		SYNFLEX SUCTION, DISCHARGE, PRESSURE AND CONTROL LINES	1	KMEM
DC-05-6220		WATEROUS ANODE BLOCKS - 2 TOTAL	1	KMEM
DC-10-2002		SIDE MOUNT PUMP MODULE, MD, RM AERIAL	1	KMEM
DC-10-2500		PUMP MODULE - STEEL CONSTRUCTION	1	KMEM
		****** HEADER, SUCTIONS - REARMOUNT TA-MD, SIDE MOUNT**	**1**	**KMEM**
DC-14-3210		WATEROUS MAIN SUCTION INLETS 6" NST, 1500 GPM CSU PUMP	1	KMEM
DC-14-5300		SHORT NECK MAIN PUMP SUCTION INLETS - DS & OS	1	KMEM
DC-14-5560	>	6" NST MAIN PUMP SUCTION PRESSURE VENTED CAPS (2)	1	KMEM
		HEADER - AUXILIARY SUCTION/S - AERIALS	**1**	**KMEM**
DC-20-1000		2 1/2" AUX. SIDE SUCTION @ DS PANEL TO REAR OF MAIN INLET	1	KMEM
DC-20-1100		2 1/2" AKRON #8800 S.S. BALL VALVE, DS REAR AUX SUCTION	1	KMEM
DC-20-1200		SWING CONTROL @ VALVE, DS REAR AUX SUCTION	1	KMEM
DC-20-9500		BEHIND PANEL MOUNT	1	KMEM
		****** HEADER - TANK TO PUMP - MD REARMOUNTS**	**1**	**KMEM**
DC-25-1200		TANK TO PUMP - 3" VALVE - LADDERS & PLATFORMS	1	KMEM
DC-25-3110		3" AKRON #8800 SERIES - S.S. BALL, VALVE , TANK TO PUMP	1	KMEM
DC-25-5110		3" PUSH/PULL CONTROL FOR TANK TO PUMP	1	KMEM
		****** HEADER - TANK FILL - MD REARMOUNT**	**1**	**KMEM**
DC-30-2100		TANK FILL LINE 2" FROM PUMP - SIDE MOUNT	1	KMEM
DC-30-2300		2" AKRON #8800 SERIES - S.S. BALL TANK FILL, SIDE MOUN	1	KMEM
DC-30-6500		PUSH/PULL CONTROL FOR TANK FILL	1	KMEM
		****** DISCHARGES & ACCESSORIES, RM-TA-MD AERIAL - SIDE MOUNT**	**1**	**KMEM**
		DRIVER'S SIDE #1 MAIN DISCHARGE	**1**	**KMEM**
DC-35-0010		DS MAIN DISCHARGE #1 - SIDE MOUNT	1	KMEM
DC-35-0110		2 1/2" AKRON #8800 SERIES - S.S. BALL, DS #1, SIDE MOUNT	1	KMEM
DC-35-1815		DS #1 DISCH - 2 1/2" STRAIGHT NST & 30-DEGREE NST ELBOW	1	KMEM
DC-35-2010		2 1/2" NST PRESSURE VENTED CAP - DS DISCHARGE #1	1	KMEM
DC-35-2410		PUSH/PULL CONTROL FOR DS DISCHARGE #1 -SIDE MOUNT	1	KMEM
DC-35-3110		INNOVATIVE CONTROLS LIQUID FILLED 2 1/2" PRESS GAUGE SS- DS DISCHARGE #1	1	KMEM
		DRIVER'S SIDE #2 MAIN DISCHARGE	**1**	**KMEM**
DC-35-5010		DS MAIN DISCHARGE #2 - SIDE MOUNT	1	KMEM
DC-35-5110		2 1/2" AKRON #8800 SERIES - S.S. BALL, DS #2, SIDE MOUNT	1	KMEM
DC-35-6815		DS #2 DISCH - 2 1/2" STRAIGHT NST & 30-DEGREE NST ELBOW	1	KMEM

PART NO	S	DESCRIPTION	QTY	ID
DC-35-7010		2 1/2" NST PRESSURE VENTED CAP - DS DISCHARGE #2	1	KMEM
DC-35-7410		PUSH/PULL CONTROL FOR DS DISCHARGE #2 -SIDE MOUNT	1	KMEM
DC-35-8110		INNOVATIVE CONTROLS LIQUID FILLED 2 1/2" PRESS GAUGE SS- DS DISCHARGE #2	1	KMEM
		OFFICER'S SIDE #1 MAIN DISCHARGE	**1**	**KMEM**
DC-39-0010	>	OS MAIN DISCHARGE #1 - SIDE MOUNT	1	KMEM
DC-39-0110		2 1/2" AKRON #8800 SERIES - S.S. BALL, OS #1, SIDE MOUNT	1	KMEM
DC-39-1815		OS #1 DISCH - 2 1/2" STRAIGHT NST & 30-DEGREE NST ELBOW	1	KMEM
DC-39-2010		2 1/2" NST PRESSURE VENTED CAP - OS DISCHARGE #1	1	KMEM
DC-39-2410		PUSH/PULL CONTROL FOR OS DISCHARGE #1 -SIDE MOUNT	1	KMEM
DC-39-3110		INNOVATIVE CONTROLS LIQUID FILLED 2 1/2" PRESS GAUGE SS- OS DISCHARGE #1	1	KMEM
		OFFICER'S SIDE #2 MAIN DISCHARGE	**1**	**KMEM**
DC-39-5010	>	OS MAIN DISCHARGE #2 - SIDE MOUNT	1	KMEM
DC-39-5080	>	**** WATEROUS PUMP LDH DISCHARGE PORT ****	1	KMEM
DC-39-5130	>	4" AKRON #8840 VALVE, OS #2, SIDE MOUNT	1	KMEM
DC-39-6865	>	OS #2 DISCH - 4" STRAIGHT NST	1	KMEM
DC-39-7045		DELETE 4" NST CAP - OS DISCHARGE #2	1	KMEM
DC-39-7315		4" NSTF X 4" STORZ KOCHEK SKE-R 30° ADAPTER WITH CAP OS	1	KMEM
DC-39-7810	>	AKRON HANDWHEEL GEAR VALVE CONTROL, OS DISCHARGE #2	1	KMEM
DC-39-8110		INNOVATIVE CONTROLS LIQUID FILLED 2 1/2" PRESS GAUGE SS- OS DISCHARGE #2	1	KMEM
		CROSSLAY #1 DISCHARGE	**1**	**KMEM**
DC-47-0400		CROSSLAY #1, 1 1/2" - AERIAL	1	KMEM
DC-47-1110		CROSSLAY #1 CAPACITY - 200' OF 1 3/4" HOSE	1	KMEM
DC-47-1410		CROSSLAY #1 - DOUBLE STACK HOSE DESIGN	1	KMEM
DC-47-1510		1 1/2" NST CHICKSAN SWIVEL - CROSSLAY #1	1	KMEM
DC-47-2110		CROSSLAY #1, PLUMBING, 2" STAINLESS STEEL PIPING	1	KMEM
DC-47-2210		2" AKRON #8800 SERIES - S.S. BALL, VALVE CROSSLAY #1, DISCH	1	KMEM
DC-47-2610		PUSH/PULL 1/4 TURN CONTROL CROSSLAY #1	1	KMEM
DC-47-3210		INNOVATIVE CONTROLS LIQUID FILLED 2 1/2" PRESS GAUGE SS - CROSSLAY #1	1	KMEM
		CROSSLAY #2 DISCHARGE	**1**	**KMEM**
DC-47-5400		CROSSLAY #2, 1 1/2" - AERIAL	1	KMEM
DC-47-6110		CROSSLAY #2 CAPACITY - 200' OF 1 3/4" HOSE	1	KMEM
DC-47-6410		CROSSLAY #2 - DOUBLE STACK HOSE DESIGN	1	KMEM
DC-47-6510		1 1/2" NST CHICKSAN SWIVEL - CROSSLAY #2	1	KMEM
DC-47-7110		CROSSLAY #2, PLUMBING, 2" STAINLESS STEEL PIPING	1	KMEM
DC-47-7210		2" AKRON #8800 SERIES - S.S. BALL, VALVE CROSSLAY #2,	1	KMEM
DC-47-7610		PUSH/PULL 1/4 TURN CONTROL CROSSLAY #2	1	KMEM
DC-47-8210		INNOVATIVE CONTROLS LIQUID FILLED 2 1/2" PRESS GAUGE SS - CROSSLAY #2	1	KMEM
		CROSSLAY & SPEEDLAY OPTIONS - RM AERIAL	**1**	**KMEM**
DC-50-7015	>	VINYL CROSS LAY COVER	1	KMEM
DC-50-7030		CROSSLAY COVER RED IN COLOR	1	KMEM
	>	**WATERWAY DISCHARGE**	**1**	**KMEM**
DC-62-0215		AERIAL WATERWAY DISCHARGE - TA-MD AERIAL	1	KMEM
DC-62-1130		WATERWAY DISCHARGE, PLUMBING, 4" STAINLESS STEEL - RM	1	KMEM
DC-62-1240		4" AKRON #8840 SERIES VALVE, WATERWAY	1	KMEM
DC-62-1950	>	AKRON HANDWHEEL GEAR VALVE CONTROL, WATERWAY	1	KMEM
DC-62-2210		INNOVATIVE CONTROLS LIQUID FILLED 2 1/2" PRESS GAUGE SS - WATERWAY	1	KMEM
		PUMP PANELS & ACCESSORIES	**1**	**KMEM**
DD-65-0505		SIDE MOUNT PUMP PANEL - RM AERIAL	1	KMEM
DD-65-4115		SIDE MOUNT PANELS - 12 GAUGE BRUSHED STAINLESS STEEL	1	KMEM
DD-65-4710		VERTICALLY HINGED GAUGE PANEL - SIDE MOUNT	1	KMEM
DD-65-4810		OFFICER SIDE VERTICALLY HINGED PUMP ACCESS DOOR - SIDE MOUNT	1	KMEM
DD-65-5150		PANEL FASTENERS	1	KMEM
DD-65-5510		CAPS AND ADAPTERS SAFETY TETHER - BALL CHAIN	1	KMEM
DD-65-8820		PUMP PANEL DISCH./SUCTION TRIM PLATES, HIGH POLISHED	1	KMEM

PART NO	S	DESCRIPTION	QTY	ID
DD-65-9000		DISCHARGE GAUGE TRIM BEZELS	1	KMEM
DD-65-9110		IDENTIFICATION PLATES	1	KMEM
DD-66-0100		PUMP OPERATOR'S PANEL LIGHT SHIELD	1	KMEM
DD-66-0135		TECNIQ E18 LED LIGHTS - LIGHT SHIELD	1	KMEM
DD-66-2100		OS PUMP PANEL LIGHTING	1	KMEM
DD-66-2130		TECNIQ EON 3 LED LIGHTS - OS PUMP PANEL	1	KMEM
		PUMP OPERATOR'S PANEL - SIDE MOUNT, AERIAL	**1**	**KMEM**
DD-70-2334		FIRE RESEARCH "IN CONTROL" PRESSURE GOVERNOR CONTROL @ PANEL	1	KMEM
DD-70-2410		PUMP PRESSURE & VACUUM TEST PORTS @ PANEL	1	KMEM
DD-70-4125	>	DELETE - MASTER PRESSURE & COMPOUND GAUGES	1	KMEM
DD-70-4130		**** CONSIDER DELETING MASTER GAUGES - IN GOVERNOR DISPLAY ****	1	KMEM
DD-70-4680		PRESSURE & COMPOUND GAUGE RANGES - SINGLE STAGE	1	KMEM
DD-70-4900		AUXILIARY ENGINE COOLER	1	KMEM
		WATER TANK LEVEL GAUGE - AERIAL	**1**	**KMEM**
DD-72-0410		FIRE RES - TANK VISION #WLA300-A00 LED WATER TANK GAUGE - PRIMARY	1	KMEM
DD-72-1300	>	FIRE RES WATER LEVEL - 1/4" NPT PRESS TRANS @ BOTTOM TANK	1	KMEM
DD-80-0110		SLIDE-OUT STEP @ DRIVER'S PUMP OPERATOR'S PANEL	1	KMEM
DE-00-1015	>	**** HEADER, 109' MD TA, WATER TANK	1	KMEM
		WATER TANKS/OPTIONS AERIALS	**1**	**KMEM**
DE-05-1700	>	UPF POLYIIE TANK, 300 GAL. - AERIAL	1	KMEM
DE-05-6000		TANK DESCRIPT, CONSTR AND MOUNT, UPF POLY IIE TANK	1	KMEM
JA-00-0100		BODY AND COMPARTMENT HEADER (ALL AERIAL DEVICES)	1	KMEM
JA-00-5020		GEN. 3/16" ALUM BODY DESCRIPT REAR MNT. LADDERS, HEAVY DUTY	1	KMEM
TF-02-4030		COMPARTMENTATION, 109 TA STYLE #1H-HI	1	KMEM
		****** HEADER, 103-RM BODY OPTIONS (WITH PUMP)**	**1**	**KMEM**
TF-10-0100		BEVELED OVERLAPPING DOORS, ALL COMPARTMENTS, ALL DEVICES	1	KMEM
TF-10-1900		BRUSHED FINISHED DOOR PANS - 2" THICK DOORS	1	KMEM
TF-10-2700		DOOR HINGE FOR BEVELED OVERLAPPING HINGED DOORS	1	KMEM
TF-10-2800		DOOR SEAL FOR BEVELED OVERLAPPING HINGED DOORS	1	KMEM
TF-10-2940		ROTARY LATCHES WITH D-RING HANDLES	1	KMEM
TF-10-3150		GAS SHOCK ON HORIZONTALLY & VERTICALLY HINGED DOORS	1	KMEM
TF-10-6000		COMPARTMENT FLOORS (AERIALS ONLY)	1	KMEM
TF-11-0500		COMPARTMENT GENERAL DESCRIPTION, ALL LADDERS & PLATFORMS	1	KMEM
TF-11-1441		PAINTED REAR BODY PANEL, RM	1	KMEM
TF-11-2310		109 1/2 WIDTH S. S. OUTRIGGER COVER PANEL	1	KMEM
TF-11-3045		BODY RUB RAILS, C-CHANNEL	1	KMEM
TF-12-1000		RUNNING BOARD STEPS (AERIALS ONLY)	1	KMEM
TF-13-3000		REAR BODY MODULE, REAR MOUNTS A-FRAME ONLY	1	KMEM
TF-13-3100		REAR MOUNT, TURNTABLE A-FRAME LADDER STEPS (MD)	1	KMEM
TF-13-5000		REAR-MOUNTS, BODY HANDRAILS, EXTRUDED ALUMINUM, A-FRAME BODY	1	KMEM
TF-14-1000		ALUMINUM WHEEL WELL LINERS	1	KMEM
TF-14-1710		POLISHED ALUMINUM FENDERETTES, TANDEM AXLE BODIES	1	KMEM
TF-14-5000		REAR MUD FLAPS	1	KMEM
TF-14-6700		PAINTED REAR TOW EYES, BELOW BODY - REARMOUNT AERIALS	1	KMEM
TF-15-1020		HOSE BED, REAR MOUNT AERIALS, 75-100 HIGH BODY	1	KMEM
TF-15-1900		ALUMINUM HOSE BED FLOORING - AERIAL	1	KMEM
TF-15-2020	>	HOSE CHUTE, RIGHT CENTER	1	KMEM
TF-15-3110		HOSE BED COVER, VINYL WITH QTR TURNS	1	KMEM
TF-15-3190		HYPALON MATERIAL RED IN COLOR	1	KMEM
		****** HEADER, COMPARTMENT ACCESSORIES - REARMOUNTS**	**1**	**KMEM**
TJ-05-1000		ADJUSTABLE SHELF DESCRIPTION - REARMOUNT	1	KMEM
TJ-05-2000	>	(AUTO QTY) ADJUSTABLE SHELF(S), MOUNTED AS DIRECTED	8	KMEM
TJ-10-1000		250#, FLOOR MOUNTED, ROLLOUT TRAY DESCRIPTION - REARMOUNT	1	KMEM
TJ-10-1105	>	(AUTO QTY) ROLLOUT TRAY(S), MOUNTED AS DIRECTED	2	KMEM
TJ-55-1000		SWING OUT TOOL BOARD, PAC TRAC DOUBLE FACED EXTRUSION - REARMOUNT	1	KMEM
TJ-55-1200	>	(AUTO QTY) SWING OUT TOOL BOARD(S), MOUNTED AS DIRECTED	1	KMEM
	>	**"NOTE" READ THIS BEFORE ADDING ANY ADDITIONAL GROUND LADDERS**	**1**	**KMEM**

PART NO	S	DESCRIPTION	QTY	ID
		****** HEADER, 79-100-109-TA-HI GROUND LADDERS**	**1**	**KMEM**
TN-00-5020	>	CENTER LADDER STORAGE, 79-100-109 TA REAR MOUNT	1	KMEM
TN-00-7020		ROLL-UP DOOR - BRUSHED, LADDER COMPARTMENT, REAR MOUNT ONLY	1	KMEM
TN-01-0120		ALCO-LITE 115' LADDER COMP, 79-100-109 TA REAR MOUNT	1	KMEM
TN-02-1110		ALCO-LITE PEL3-35 35' 3-SECTION EXTENSION LADDER (ALUM)	1	KMEM
TN-02-1170		ALCO-LITE PEL-24 24' 2-SECTION EXTENSION LADDER (ALUM)	1	KMEM
TN-02-2510		ALCO-LITE PRL-16 16' ROOF LADDER W/FOLDING HOOKS (ALUM)	2	KMEM
TN-02-7000		ALCO-LITE AEL-14 14' ATTIC EXTENSION LADDER (ALUM)	1	KMEM
TN-02-8010		ALCO-LITE FL-10 10' FOLDING ATTIC LADDER (ALUM)	1	KMEM
		****** HEADER, PIKE POLES & HOLDERS - AERIALS**	**1**	**KMEM**
TN-20-0000		ADDITIONAL ITEMS SHIPPED WITH VEHICLE, ALL AERIAL DEVICES	1	KMEM
		****** HEADER, LOOSE EQUIPMENT - AERIAL**	**1**	**KMEM**
TN-35-1015		TWO (2) ZICO #SAC-44 FOLDING WHEEL CHOCKS, (2) MTD DRIVER SIDE	1	KMEM
		****** HEADER, 109' H.D. 4-SECTION AERIAL LADDER, TANDEM AXLE**	**1**	**KMEM**
TQ-00-0650		109' M.D. AERIAL LADDER, GEN., INTENT & DESIGN STANDARDS	1	KMEM
TQ-00-3000		MOUNTING OF AERIAL, REAR MOUNTS	1	KMEM
TQ-00-3230		HEIGHT AND REACH, 109' 4-SECT. MD AERIAL LADDER	1	KMEM
TQ-00-4000		MATERIAL STANDARDS, ALL DEVICES	1	KMEM
TQ-00-5010		109' H.D. AERIAL LADDER, HYDRAULIC SYSTEM	1	KMEM
TQ-00-5115		PARKER HOSE KIT - 4 JACK UNIT (109)	1	KMEM
TQ-00-6120		HYDRAULIC PUMP - PRESSURE COMPENSATED	1	KMEM
TQ-00-7010		HYDRAULIC RESERVOIR - 40 GALLON	1	KMEM
TQ-00-7065		HYDRAULIC OIL - REGULAR - A/W 46 - 60 GAL	1	KMEM
TQ-00-7110		DIVERTER VALVE, REAR MOUNT DEVICES	1	KMEM
TQ-00-7225		OUTRIGGER HYDRAULIC CONTROL VALVE - RM DO3	1	KMEM
TQ-00-7410		ELECTRIC TURNTABLE HYDRAULIC CONTROL VALVE, RM LADDERS	1	KMEM
TQ-00-7505		HYDRAULIC SYSTEM FILTRATION	1	KMEM
TQ-00-8515		RM LADDER 4-OUTRIGGER, "IQAN" MOTION CONTROL SYSTEM - ELECTRIC CONTROLS @ TT	1	KMEM
TQ-00-8700		HYDRAULIC PUMP PRESSURE - DISPLAY	1	KMEM
TQ-00-8710		ELEVATION ANGLE OF LADDER - DISPLAY	1	KMEM
TQ-00-8715		VERTICAL HEIGHT OF LADDER - DISPLAY	1	KMEM
TQ-00-8725		DEGREE OF ROTATION FROM VEHICLE CENTERLINE - DISPLAY	1	KMEM
TQ-00-8730		E-ZONE CAB & BODY AVOIDANCE WARNING - DISPLAY	1	KMEM
TQ-00-8735		E-ZONE SHORT JACK WARNING - DISPLAY	1	KMEM
TQ-00-8740		CRADLE ALIGNMENT MESSAGE - DISPLAY	1	KMEM
TQ-00-8750		DEVICE LOAD MONITORING - DISPLAY	1	KMEM
TQ-00-8760		E-SPEED LADDER TIP SPEED CONTROL - DISPLAY	1	KMEM
TQ-00-8765		E-CUSH RAMP CONTROL FOR ELEVATION - DISPLAY	1	KMEM
TQ-00-8770		E-CUSH RAMP CONTROL FOR EXTENSION & RETRACTION - DISPLAY	1	KMEM
TQ-00-8890		WARNING MESSAGES - TURNTABLE ONLY	1	KMEM
TQ-00-9510		109' H.D. AERIAL LADDER, EMERGENCY HYDRAULIC PUMP, EPU	1	KMEM
TQ-01-1000		HOT SHIFT PTO W/CONTROLS IN CAB	1	KMEM
TQ-01-1100		FAST IDLE CONTROL FOR ALL AERIAL DEVICES	1	KMEM
TQ-02-0030		109' H.D. AERIAL LADDER, TORQUE BOX	1	KMEM
TQ-02-1030		109' H.D. AERIAL OUTRIGGERS - 14'	1	KMEM
TQ-02-1630		109' H.D. LADDER OUTRIGGERS - HORIZONTAL CYLINDER	1	KMEM
TQ-02-1860		109' HD LADDER OUTRIGGERS - VERTICAL CYLINDERS - EXTENDED STROKE	1	KMEM
TQ-02-2010		EXTENDED OUTRIGGER PENETRATION - 11 DEGREES	1	KMEM
TQ-02-2110		IQAN - OUTRIGGER STRING POTENTIOMETER - FOUR (4) OUTRIGGERS	1	KMEM
TQ-02-2200		OUTRIGGER/JACK FOOT PADS, FOUR (4) JACK DEVICES	1	KMEM
TQ-02-2350		AUXILARY JACK PADS, FOUR (4) 24" X 24" x 1" POLY	1	KMEM
TQ-02-2500		OUTRIGGER INTERLOCK SYSTEM & ALARM, ALL DEVICES	1	KMEM
		****** HEADER - OUTRIGGER LIGHTING, FOUR (4) OUTRIGGERS**	**1**	**KMEM**
TQ-02-5145		AKRON LED OUTRIGGER LAMPS, 4-OUTRIGGERS	1	KMEM
TQ-02-5225		LED OUTRIGGER GROUND LIGHTS - GROTE WHITELIGHT, 4-OUTRIGGERS	1	KMEM
TQ-02-5360		CODE 3 45 SERIES, LED LIGHTS ON (4) OUTRIGGER PANELS	1	KMEM
TQ-02-6005		OUTRIGGER WARNING LIGHT ACTIVATION, PRIMARY WARNING	1	KMEM
TQ-02-6800		OUTRIGGER SCOTCHLITE, WHITE	1	KMEM

PART NO	S	DESCRIPTION	QTY	ID
TQ-02-7130		AERIAL LADDER, TETHER OUTRIGGER CONTROLS - FOUR JACKS	1	KMEM
TQ-02-9200		OUTRIGGER LEVEL SIDE TO SIDE, ALL REAR MOUNT DEVICES	1	KMEM
TQ-03-0200		109' H.D. AERIAL LADDER, TURNTABLE	1	KMEM
TQ-03-3010		TURNTABLE DECK - ALUMINUM TREADPLATE	1	KMEM
TQ-04-1852		HEEL PIN STEP ON TURNTABLE, 79', 103', 109' & 123' & 100' M.M. LADDERS	1	KMEM
TQ-04-1855		TURNTABLE HANDRAILS, KNURLED ALUMINUM, 3-SIDES	1	KMEM
TQ-04-2117		HEEL PINS - 109'	1	KMEM
TQ-04-2300		STAINLESS STEEL CRADLE ALIGNMENT ARROWS ON TURNTABLE	1	KMEM
TQ-04-2800		SAFETY CHAINS BETWEEN TURNTABLE HANDRAIL, REAR MOUNTS & TDA	1	KMEM
TQ-04-5150		109' H.D. AERIAL LADDER, TURNTABLE SWIVEL	1	KMEM
TQ-04-9000		IQAN - SWIVEL ROTATION ENCODER	1	KMEM
TQ-06-0130		109' H.D. LADDER, LADDER CONSTRUCTION	1	KMEM
TQ-06-0900		STAINLESS STEEL EGRESS W/TIP SKID GAURDS	1	KMEM
TQ-06-1075		109' H.D. 4-SECTION, LADDER DIMENSIONS	1	KMEM
TQ-06-3000		RUNG COVERS - PHOTOLUMINESCENT, ALL DEVICES	1	KMEM
TQ-06-4000		*** MUST UPGRADE TO DUAL STEPS - CREEPER CONTROLS SELECTED ***	1	KMEM
TQ-06-4015		DUAL FOLDING STEPS @ LADDER TIP, ALL DEVICES	1	KMEM
TQ-06-4100		RED SCOTCHLITE MATERIAL ON LAST 6' OF LADDER TIP	1	KMEM
TQ-06-4200		4' FIRE HOOKS UNLIMITED PIKE POLE MOUNTED IN FLY SECTION OF LADDER	1	KMEM
TQ-06-4240	>	PIKE POLE MOUNTED ON LEFT SIDE OF FLY SECTION	1	KMEM
TQ-06-4250		6 LB. PICKHEAD AXE MOUNTED IN FLY SECTION, INCLUDES AXE	1	KMEM
TQ-06-4260	>	AXE MOUNTED ON LEFT SIDE OF FLY SECTION	1	KMEM
TQ-06-6500		RESCUE EYELET ON LAST RUNG OF LADDER TIP	1	KMEM
TQ-06-9000		AERIAL TRAVEL SUPPORT, ALL DEVICES	1	KMEM
TQ-06-9035		CRADLE ILLUMINATION LIGHTS - GROTE WHITELIGHT LED	1	KMEM
TQ-07-0250		109' H.D. AERIAL LADDER, ELEVATION SYSTEM	1	KMEM
TQ-07-2800		IQAN - INCLINOMETER	1	KMEM
TQ-07-2801		IQAN - MOMENT LOAD INDICATOR	1	KMEM
TQ-07-2805		IQAN - E-CUSH CONTROL, ELEVATION SYSTEM - LADDER	1	KMEM
TQ-08-0250		109' H.D. AERIAL LADDER, ROTATION SYSTEM	1	KMEM
TQ-08-2800		ROTATION MOTOR AND BRAKE - 41" EXTERNAL BEARINGS	1	KMEM
TQ-08-2950		SWING DRIVE ADJUSTMENT	1	KMEM
TQ-08-3000		IQAN - "E-SPEED" SAFETY SYSTEM, LADDERS	1	KMEM
TQ-08-3110		IQAN - "E-ZONE" ROTATION SAFETY SYSTEM, 4-OUTRIGGERS	1	KMEM
TQ-08-3650		IQAN - "E-ZONE" CAB & BODY PROXIMITY SYSTEM - LADDERS	1	KMEM
TQ-09-0250		109' H.D. AERIAL LADDER, EXTENSION/RETRACTION SYSTEM	1	KMEM
TQ-09-2350		EXTENSION CYLINDERS PAINTED LADDER PAINT COLOR	1	KMEM
TQ-09-2800		IQAN - EXTENSION SYSTEM STRING POTENTIOMETER	1	KMEM
TQ-09-2810		IQAN - "E-CUSH" EXTENSION/RETRACTION SYSTEM - LADDERS	1	KMEM
TQ-09-3030		LADDER SLIDE PADS, 109' LADDER	1	KMEM
		LADDER EXTENSION NUMBERS, ALL DEVICES	**1**	**KMEM**
TQ-09-3150		LADDER LEVEL INDICATOR (BASE SECTION) - LIGHTED	1	KMEM
TQ-09-3217		LADDER, CABLE/HOSE/WIRE ROUTING, 109' LADDER	1	KMEM
		****** HEADER - LADDER, 120 VOLT ELECTRICAL SYSTEM & ACCESSORIES**	**1**	**KMEM**
TQ-10-0100		LADDER, 120 VOLT ELECTRICAL SYSTEM	1	KMEM
TQ-10-0125		DELETE LADDER TIP RECEPTACLE	1	KMEM
		****** HEADER - LADDER, 12 VOLT ELECTRICAL SYSTEM & ACCESSORIES**	**1**	**KMEM**
TQ-10-1018		HEEL PIN STEP LIGHTS - TECNIQ EON 3 LED LIGHTS	1	KMEM
TQ-10-1040		TURNTABLE CONTROL CONSOLE LIGHTING - LUMA BAR LED H2O	1	KMEM
TQ-10-1060		TURNTABLE CONSOLE STEP LIGHT - TECNIQ EON 3 LED	1	KMEM
TQ-10-1110		TWO (2) UNITY SPOTS @ LADDER BASE SECTION	1	KMEM
TQ-10-1210		ONE (1) UNITY SPOT & ONE (1) FLOOD @ LADDER TIP	1	KMEM
TQ-10-2805		LADDER WALKWAY ILLUMINATION LIGHTS, 4-SECT LADDER	1	KMEM
TQ-10-2850		RED - LADDER ILLUMINATION LIGHTS	1	KMEM
TQ-12-0010		LADDER, CONTROL STATION	1	KMEM
TQ-12-0020		RM LADDERS, CONSOLE LOCATED @ LH SIDE OF TURNTABLE, STD	1	KMEM
TQ-12-0085		PAINTED ALUMINUM TURNTABLE CONSOLE - MATCH LADDER COLOR	1	KMEM
TQ-12-0250		109' H.D. AERIAL LADDER, TURNTABLE CONTROL STATION	1	KMEM
TQ-12-2520		FIRE RESEARCH INSIGHT FLOWMETER @ TURNTABLE CONSOLE	1	KMEM

PART NO	S	DESCRIPTION	QTY	ID
TQ-12-2595		TURNTABLE CONSOLE COVER - PAINTED RADIUS	1	KMEM
TQ-12-3000		IQAN - "CREEPER CONTROLS" @ LADDER TIP	1	KMEM
TQ-14-1200		LADDER, FIRE RESEARCH ACT -2 WAY COMMUNICATION SYSTEM - LOWER CONTROL	1	KMEM
TQ-14-1205		LADDER, FIRE RESEARCH ACT 2-WAY COMMUNICATION SYSTEM - UPPER SPEAKER/MIC	1	KMEM
TQ-18-0100		109' H.D. AERIAL LADDER, LADDER WATERWAY SYSTEM	1	KMEM
TQ-18-1030		109' H.D. AERIAL LADDER, LADDER WATERWAY	1	KMEM
TQ-18-2525		4" HEEL PIN SWIVEL - 109' LADDER	1	KMEM
TQ-18-2600		AUTOMATIC WATER DRAIN/VENT	1	KMEM
TQ-18-3000		ALL DEVICES, WATERWAY RELIEF VALVE	1	KMEM
TQ-18-3015		REAR MOUNT AERIAL WATERWAY DRAIN, 1 1/2" VALVE	1	KMEM
TQ-18-3150		4" NST REAR AERIAL WATERWAY INLET ADAPTER, REAR MOUNTS	1	KMEM
TQ-18-3800		INNOVATIVE CONTROLS 2 1/2" GAUGE FOR AERIAL INLET, REAR MOUNTS	1	KMEM
TQ-18-4130	>	LADDER, AKRON #3480 "STREAMMASTER II" MONITOR	1	KMEM
TQ-18-4210	>	LADDER, AKRON #5178 NOZZLE	1	KMEM
TQ-18-4300		LADDER, AKRON MONITOR CONTROLS W/ AUTO STOW	1	KMEM
TQ-18-4505		LADDER, ELECTRIC SELECTABLE WATERWAY TROLLEY - NEW	1	KMEM
TQ-18-4950		"STORE FRONT BLITZ" DESCRIPTION	1	KMEM
TQ-20-0250		109' H.D. AERIAL LADDER, LADDER CAPACITIES, TANDEM AXLE	1	KMEM
TQ-50-0200	>	FIRE DEPT AERIAL FAMILIARIZATION - PROVIDED BY REP	1	KMEM
TQ-50-0240	>	REP PROVIDED FAMILIARIZATION - FOUR (4) DAYS	1	KMEM
TQ-50-0600		AERIAL SERVICE, ALL DEVICES	1	KMEM
TQ-50-0700		WARNING DECALS, ALL DEVICES	1	KMEM
TQ-52-0100		AERIAL LADDER, MANUALS, TWO (2) SETS	1	KMEM
TQ-70-0250		109' H.D. AERIAL LADDER, TANDEM AXLE , CERT & TESTING	1	KMEM
		****** HEADER - PAINT SECTION - ALL UNITS ******	**1**	**KMEM**
UA-00-1100		GENERAL PAINT DESCRIPTION - ALL	1	KMEM
UA-00-1200		GENERAL PRIMER & PREP DESCRIPTION - LADDER/PLATFORM	1	KMEM
UA-00-1400		GENERAL FINISH PAINT DESCRIPTION - LADDER/PLATFORM	1	KMEM
UA-00-2700		BODY BUFFING & FINISH - LADDER/PLATFORM	1	KMEM
		****** HEADER - LADDER/PLATFORM BODY PAINT ******	**1**	**KMEM**
UA-03-0200		INSIDE/UNDERSIDE BODY PAINTED JOB COLOR - LADDER/PLATFORM	1	KMEM
UA-03-0400		CMPT INT W/ MULTISPEC, WHITE MARBLE STONE - LADDER/PLATFORM	1	KMEM
UA-03-0900		SINGLE COLOR BODY PAINT SCHEME - LADDER/PLATFORM	1	KMEM
UA-03-2200		PUMPHOUSE & PLUMBING PAINTED JOB COLOR - LADDER/PLATFORM	1	KMEM
		****** HEADER - TANDEM AXLE CUSTOM CHASSIS PAINT (AERIAL)**	**1**	**KMEM**
UA-05-0050		CUSTOM CAB PRIMER & PREP	1	KMEM
UA-05-0070		CUSTOM FINISH PAINT & PREP	1	KMEM
UA-05-0200		TWO TONE CUSTOM CAB PAINT SCHEME	1	KMEM
UA-05-0350		CUSTOM CAB BUFFING & FINISH	1	KMEM
UA-05-0360		CUSTOM CAB INTERIOR PAINT - TEXTURED GRAY	1	KMEM
UA-05-0400		CUSTOM CHASSIS GLOSS BLACK COLOR FRAME RAILS	1	KMEM
UA-05-0505		CUSTOM CHASSIS WHEEL AND HUB PAINT - TANDEM AXLE	1	KMEM
UA-06-0200		LADDER, PAINTING, ALL DEVICES, WHITE #91528	1	KMEM
UA-06-0450		EXTENSION CYLINDERS PAINTED TO MATCH LADDER COLOR	1	KMEM
UA-06-0900		TORQUEBOX PAINT - JOB COLOR	1	KMEM
UA-06-1100		OUTRIGER PAINT - SILVER URETHABOND 104	1	KMEM
UA-06-1205		TURNTABLE PAINT - LADDER COLOR	1	KMEM
UA-06-1215		TURNTABLE CONSOLE PAINT - LADDER COLOR	1	KMEM
UA-06-1225		LIFT CYLINDERS CONSOLE PAINT - LADDER COLOR	1	KMEM
UA-06-1500		LADDER RUST INHIBITOR - ALL DEVICES	1	KMEM
UA-06-2120	>	PAINT CODES, TWO-TONE COLORS, FILL IN BLANKS	1	KMEM
UA-06-2130		PAINT CODES, AERIAL DEVICE - WHITE #91528	1	KMEM
UA-06-2200		PINT OF TOUCH-UP PAINT	1	KMEM
UA-06-2510		FINALIZATION & DETAILING - LADDER/PLATFORM	1	KMEM
UA-06-2850		RUSTPROOFING WARRANTY, TEN (10) YEAR	1	KMEM
		****** HEADER, LETTERING & STRIPING - 109-4-RM-MD**	**1**	**KMEM**
UA-12-0100		COMPUTER GENERATED LETTERING	1	KMEM
UA-12-1220		GOLDLEAF W/ DUAL DROP SHADOW LETTERING ON FRONT CAB DOORS	1	KMEM

PART NO	S		DESCRIPTION	QTY	ID
UA-12-1245			3" LETTERING ON FRONT CAB DOORS	1	KMEM
UA-12-1760			GOLDLEAF W/ DUAL DROP SHADOW LETTERING ON CREW CAB DOORS	1	KMEM
UA-12-1785			3" LETTERING ON CREW CAB DOORS	1	KMEM
UA-12-2720			GOLDLEAF W/ DUAL DROP SHADOW LETTERING ON FRONT OF CAB	1	KMEM
UA-12-2745			3" LETTERING ON FRONT OF CAB	1	KMEM
UA-12-3100			GOLDLEAF W/ DROP SHADOW LETTERING ON CAB SIDE PANEL	1	KMEM
UA-12-3145			3" LETTERING ON CAB SIDE PANEL	1	KMEM
UA-13-0100			LETTERING FONT - BASIC BLOCK TYPE FONT	1	KMEM
UA-14-1310			LARGE CUSTOM FIRE DEPARTMENT LOGO	1	KMEM
UA-14-1320			SCOTCH-LITE W/ TWO COLORS - LARGE LOGO	1	KMEM
UA-14-1335		>	LOCATION - LARGE CUSTOM LOGO	1	KMEM
UA-16-1000			ACCENT STRIPING & SCROLL OPTIONS	1	KMEM
UA-16-1200			1/2" ACCENT STRIPE ON BODY UPPER & LOWER AREAS OF BODY	1	KMEM
UA-16-1210			GOLD LEAF ACCENT MATERIAL - UPPER & LOWER AREAS OF BODY	1	KMEM
UA-16-1500			1/2" ACCENT STRIPE ON CAB PAINT BREAK LINE	1	KMEM
UA-16-1510			GOLD LEAF ACCENT MATERIAL - CAB PAINT BREAK LINE	1	KMEM
UA-20-0100			19" X 144" LETTERING PANELS ON BASE SECTION	1	KMEM
UA-20-0200			SIGN PANELS TO PAINTED TO MATCH AERIAL DEVICE COLOR	1	KMEM
UA-20-0520			SCOTCH-LITE W/ DROP SHADOW LETTERING FOR AERIAL	1	KMEM
UA-50-0200			NFPA REQUIRED SCOTCH-LITE STRIPINGSTRIPING - TA AERIAL	1	KMEM
UA-50-0220			8" SCOTCH-LITE STRIPE ON CAB AND BODY - TA AERIAL	1	KMEM
UA-58-5100			WHITE SCOTCH-LITE	1	KMEM
UA-80-6000			REAR CHEVRON STRIPING	1	KMEM
UA-80-6002			50% VERTICAL SURFACE	1	KMEM
UA-80-6030			6" REAR SCOTCH-LITE CHEVRON STRIPING	1	KMEM
UA-80-6070			RUBY RED & LEMON YELLOW SCOTCH-LITE	1	KMEM
			****** PROPOSED - AERIAL WARRANTY PKG, W/PUMP @ REAR OF SPEC**	**1**	**KMEM**
W6-00-000J			PROPOSED - KME WARRANTY, STARTING ON DELIVERY DATE	1	KMEM
W6-00-0010	**X**	<	PROPOSED - 5 YEAR FCAM WARRANTY - CUSTOM CHASSIS	1	
			$17,500 per email Phil to Byron 9-27-16		
W6-00-003M		>	PROPOSED - 5 YEAR WARRANTY - BASE WITH CUSTOM CHASSIS	1	KMEM
W6-00-0163			PROPOSED - 10 YEAR CUMMINS ISX - EXTENDED WARRANTY	1	KMEM
W6-00-0210			PROPOSED - 5 YEAR ALLISON EVS TRANSMISSION WARRANTY	1	KMEM
W6-00-0220			PROPOSED - 3 YEAR COOLING SYSTEM WARRANTY - CUSTOM	1	KMEM
W6-00-0230			PROPOSED - LIFETIME FRAMERAIL WARRANTY	1	KMEM
W6-00-0242			PROPOSED - SHEPPARD STEERING GEAR STANDARD - THREE YEAR WARRANTY	1	KMEM
W6-00-0254			PROPOSED - 5 YEAR MERITOR FRONT AXLE - WARRANTY	1	KMEM
W6-00-0258			PROPOSED - 5 YEAR MERITOR SINGLE AXLE REAR - WARRANTY	1	KMEM
W6-00-0270			PROPOSED - 3 YEAR MERITOR ABS - WARRANTY	1	KMEM
W6-00-0320		>	PROPOSED - 10 YEAR CAB STRUCTURAL WARRANTY	1	KMEM
W6-00-0330			PROPOSED - 10 YEAR BODY STRUCTURAL WARRANTY	1	KMEM
W6-00-0390			PROPOSED - 10 YEAR CAB & BODY CORROSION WARRANTY	1	KMEM
W6-00-0450			PROPOSED - PAINT FINISH WARRANTY, TEN (10) YEAR	1	KMEM
W6-00-0470			PROPOSED - 5 YEAR LETTERING WARRANTY	1	KMEM
W6-00-0483			PROPOSED - 1 YEAR BRIGHTWORK WARRANTY	1	KMEM
W6-00-0490			PROPOSED - 10 YEAR STAINLESS STEEL PIPING WARRANTY	1	KMEM
W6-00-0500			PROPOSED - REAR SUSPENSION - LEAF SPRING - 1 YEAR WARRANTY	1	KMEM
W6-00-0570			PROPOSED - SAFEGUARD TECHNOLOGY - 10 YEAR - RUNG COVERS	1	KMEM
W6-00-0590			PROPOSED - 20 YEAR AERIAL LADDER WARRANTY	1	KMEM
W6-00-0655		>	PROPOSED - TEN 10 YEAR AERIAL WATERWAY WARRANTY	1	KMEM
W6-00-0670			PROPOSED - AERIAL DEVICE REPAIR POLICY AND LIABILITY DISCLAIMER	1	KMEM
W6-00-0695			PRO - AERIAL DEVICE HYDRAULIC COMPONENT WARRANTIES	1	KMEM
W6-00-0710			PROPOSED - LIFETIME POLY TANK WARRANTY - ALL TANKS	1	KMEM
W6-00-0820			PROPOSED - WATEROUS 5 YEAR PUMP WARRANTY (PARTS & LABOR)	1	KMEM
W6-00-0823	**X**		WATEROUS FCAM 5 YR WARRANTY CORRECTION	1	
W6-00-1153	**S**		DEALER PROVIDES WARRANTY TRANSPORT PROP and REQ	1	DLR
W6-00-1340			PROPOSED - AKRON HEAVY DUTY VALVE - 10 YEAR WARRANTY	1	KMEM
W6-00-1530			PROPOSED - USSC SEATING 6 YEAR WARRANTY	1	KMEM

PART NO	S	DESCRIPTION	QTY	ID
WA-00-0010		"AERIAL FIRE APPARATUS" NFPA 2016 STATEMENT OF EXCEPTIONS	1	KMEM

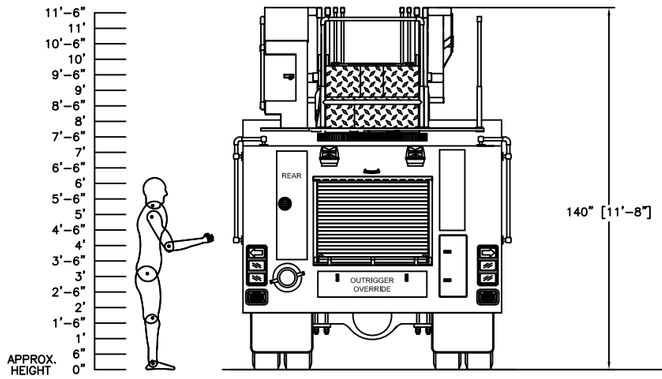

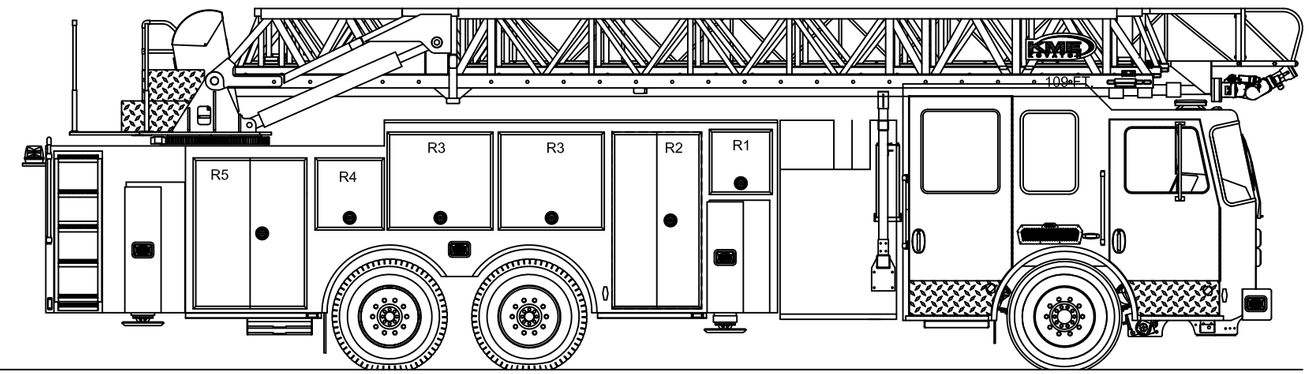

OFFICERS SIDE VIEW

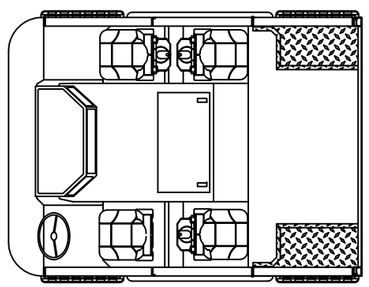

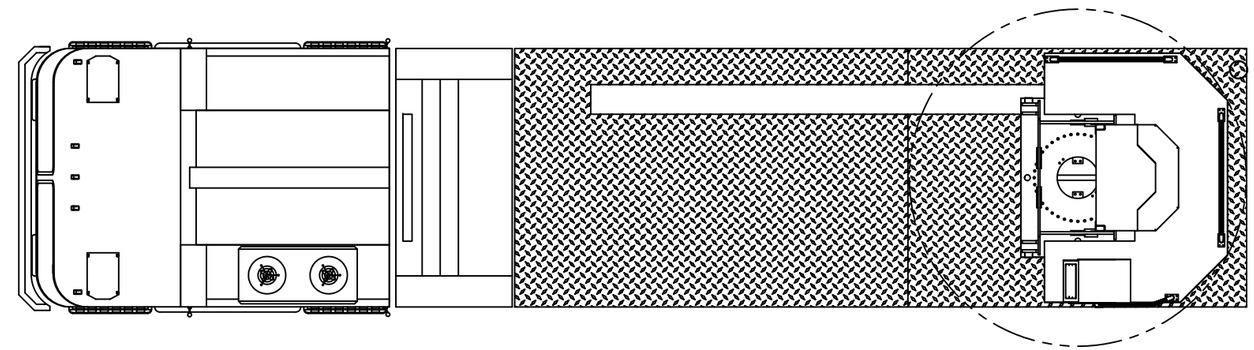

TOP VIEW

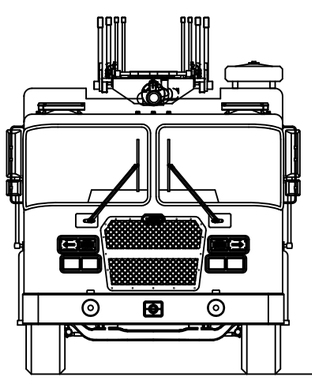

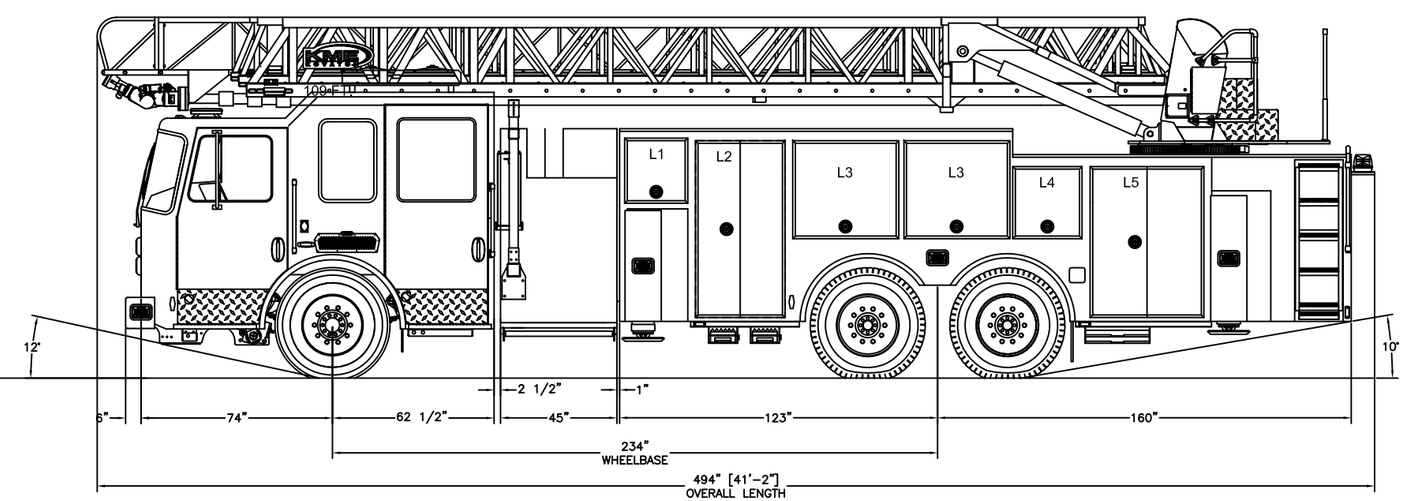

DRIVERS SIDE VIEW

CAB: 100"W PREDATOR MFD 10" RAISED ROOF
ENGINE & TRANS. CUMMINS ISX12 450 HP/ 4000 EVS
AXLES: 23,000# FRONT/54,000# REAR
PUMP: WATEROUS CSU-C20 1500 GPM SINGLE STAGE
WATER TANK: 300 GALLONS

THIS DRAWING IS A GENERAL CONFIGURATION AND MAY NOT NECESSARILY REFLECT ALL CONTRACTUAL REQUIREMENTS. CONTRACT SPECIFICATIONS SHALL PREVAIL OVER DRAWING.

CUSTOMER APPROVAL:

NAME:

TITLE:

DATE:

SYM	DATE	REVISION DESCRIPTION	APP'D

SALES ENGINEER : TBD

DIMENSIONS ARE APPROXIMATE & MAY VARY DUE TO BUILD ADJUSTMENTS

SCALE	DWG SIZE	DRAWN BY	DATE
NONE	B	Z.ZSCHUNKE	9-22-16
		APPROVED BY P.HOHERCHAK	

109' REAR MOUNT LADDER

MAPC 12 MID RANGE

PROPOSAL DRAWING

KME
ONE INDUSTRIAL COMPLEX - NESQUEHONING, PA 18240

KME

MID-RANGE FCAM 100 FOOT

MIDMOUNT AERIAL LADDER

“QUINT”

MAPC 13

Quote SO

MAPC/FCAM	MAPC 13 MID RANGE 100' MID MOUNT AERIAL QUIN

Sales Rep:

Terms:

Drawing #:
Est. Delivery Date: / /
Customer PO #:
Customer #:
QPF #:

Penalty:

Quote No: 10091-0015
10/04/2016

PART NO	S	DESCRIPTION	QTY	ID
		== MID MOUNT LADDER - 713.016 07/13/16 ==	**1**	**KMEM**
		== LETTERING & STRIPING, 100' 5-SECTION MM - 713.016 07/13/16 ==	**1**	**KMEM**
		== COMPARTMENT ACCESSORIES MIDMOUNT AERIAL - 713.016 07/13/16 ==	**1**	**KMEM**
		== MISC AND LOOSE EQUIPMENT (AERIAL) - 713.016 07/13/16 ==	**1**	**KMEM**
		== AERIAL WARRANTY PACKAGE W/PUMP - 713.016 07/13/16 ==	**1**	**KMEM**
		DEALER ======= DEALER ======= DEALER	**1**	**DLR**
		QUOTE DATA VERSION: 0713.016 - 2016 DATA SET	**1**	**KMEM**
		INDEX OF PART NUMBERS	**1**	**KMEM**
		****** HEADER - CONTRACTS, PROPOSAL FORM, ETC @ FRONT OF SPECS**	**1**	**KMEM**
		****** PROPOSED - AERIAL SPEC BOILERPLATE**	**1**	**KMEM**
04-00-0000		PROPOSED - GENERAL INFORMATION - NFPA 1901	1	KMEM
04-00-0033		PROPOSED - COMPLETION INFO	1	KMEM
04-00-0040		PROPOSED - FMVSS CERTIFICATION	1	KMEM
04-00-0060		PROPOSED - RECORDS	1	KMEM
04-00-0075		PROPOSED - TOP OF THE LINE CHASSIS MULTIPLEX	1	KMEM
04-00-0107		PROPOSED - GENERAL CONSTRUCTION - AERIAL	1	KMEM
04-00-0120		PROPOSED - SINGLE LINE RESPONSIBILITY	1	KMEM
04-00-0130		PROPOSED - PRODUCT LIABILITY - $30,000,000.00	1	KMEM
04-00-0170		PROPOSED - CRITERIA & CODE CONFORMANCE - AERIAL	1	KMEM
04-00-0193		PROPOSED - PAINT PERFORMANCE CERTIFICATION	1	KMEM
04-00-0490		PROPOSED - PRICES & PAYMENTS	1	KMEM
04-00-0540		PROPOSED - BOND REQUIREMENTS	1	KMEM
04-00-0560		PROPOSED - PERFORMANCE BOND	1	KMEM
04-00-0573		PROPOSED - FAIR, ETHICAL AND LEGAL COMPETITION	1	KMEM
04-00-0580		PROPOSED - NON-COLLUSION AGREEMENT	1	KMEM
04-00-0630		PROPOSED - MATERIAL & WORKMANSHIP	1	KMEM
04-00-0660		PROPOSED - CONTRACT SPECIALIST	1	KMEM
04-00-0680		PROPOSED - APPROVAL DRAWING	1	KMEM
04-00-1200		PROPOSED - DELIVERY	1	KMEM
04-00-1215		PROPOSED - INSTRUCTION MANUALS, TWO (2) SETS - CD	1	KMEM
04-00-1215	**X**	POWERPOINT DELIVERY - PROPOSAL FCAM AERIAL	1	
04-00-1300		PROPOSED - VEHICLE FLUIDS PLATE	1	KMEM

PART NO	S		DESCRIPTION	QTY	ID
04-00-1500			PROPOSED - MANUFACTURE GENERATED EXACT BLUEPRINT WITH BID	1	KMEM
04-00-1521	**X**		PROPOSED - KME and BULLDOG FAMA MEMBERSHIP	1	
04-00-1540			PROPOSED - MANUFACTURED IN THE UNITED STATES	1	KMEM
04-00-1550			PROPOSED - ISO 9001 QUALITY MANAGEMENT SYSTEM	1	KMEM
04-00-1570			PROPOSED - NFPA TREAD PLATE CERTIFICATION	1	KMEM
04-00-2445			PROPOSED - UNDERWRITERS LABORATORIES (UL) TESTING - FCAM	1	DLR
07-00-0015			"AERIAL FIRE APPARATUS" NFPA 2016 CHAPTERS OF COMPLIANCE	1	KMEM
08-00-0000			VEHICLE DATA PLATE DESCRIPTION	1	KMEM
14-00-0000			NFPA ROLLOVER STABILITY GENERAL STATEMENT	1	KMEM
15-00-0010		>	PROPOSED - PRINCIPAL APPARATUS DIMENSIONS & GVWR	1	KMEM
15-00-0050			!!! CRITICAL OVERALL HEIGHT REQUIREMENT !!! - "NO"	1	KMEM
15-00-0150			!!! CRITICAL OVERALL LENGTH REQUIREMENT !!! - "NO"	1	KMEM
AA-00-002A			SERVICE CENTER - PROPOSAL FCAM	1	DLR
BA-00-0305			MM LADDERS	1	KMEM
BA-00-3000			SEAT AND SEAT BELT ANCHOR TESTING	1	KMEM
BA-01-1610			<1> 100'-4-MM-HD WITH PUMP	1	KMEM
BA-01-3950	**S**	<	<2> TRAVEL HEIGHT 112", 100-4-MM-HD LOW BODY (WITH PUMP)	1	KMEM
			112" travel height per spec review #4663		
BA-02-0735			<3> MM-LAD PREDATOR - TANDEM AXLE	1	KMEM
BA-04-0205			AERIAL CHASSIS, MID-MOUNT LADDER -TANDEM AXLE (HEAVY)	1	KMEM
			****** HEADER - 100" PREDATOR CAB ******	**1**	**KMEM**
BA-04-0805			PREDATOR CAB - BASE, 100"	1	KMEM
BA-04-0850			PREDATOR CAB - BASE - ALUMINUM CONSTRUCTION	1	KMEM
BA-04-0990			PREDATOR 100" - CRASH TESTING	1	KMEM
BA-04-0995			PREDATOR 100" - 120,000# ROOF & SIDE TESTING	1	KMEM
BA-04-1300			PREDATOR 100" - MFD CAB LENGTH (DIM - 62 1/2")	1	KMEM
BA-04-1900			PREDATOR 100" - VISTA DIMENSIONS FRONT SEATING & ENGINE ENCLOSURE	1	KMEM
BA-04-4000			10" RAISED ROOF - 100" PREDATOR	1	KMEM
BA-04-5000			CAB ROOF DRIP RAIL 100" PREDATOR/PANTHER	1	KMEM
BA-05-0260			BATTERY ACCESS DOORS - REAR STEP WELLS, EACH SIDE	1	KMEM
BA-05-0610			BARRIER HEIGHT CAB DOORS, 100" PREDATOR "MFD, LFD & X-LFD"	1	KMEM
BA-05-0650			CAST ANTI-SLIP ENTRY STEPS FOR REDUCED LENGTH CAB DOORS	1	KMEM
BA-05-0700			CAB DOORS - BOLT ON WEATHER STRIP	1	KMEM
BA-05-1015			PREDATOR DOOR LATCHES, HD LOOP STYLE LATCH - BARRIER HEIGHT DOORS	1	KMEM
BA-05-1035			LOCKING CAB DOOR , OUT + IN, LOOP STYLE LATCH	1	KMEM
BA-05-1037			KEY MODEL #2001	1	KMEM
BA-05-1103			WINDOWS, MANUAL HAND CRANK STYLE - 100"	1	KMEM
BA-05-1130			DOOR WINDOW TRIM EXTRUSION, 4 - DOOR	1	KMEM
BA-05-1310			UPPER INTERIOR DOOR PANELS - ABS, 4-DOOR	1	KMEM
BA-05-1410			BRUSHED ALUMINUM DOOR SCUFF PLATES, 4 - DOOR	1	KMEM
BA-05-1510			SCOTCHLITE MATERIAL ON INTERIOR OF DOOR PANEL 4-DOORS	1	KMEM
			****** HEADER - CAB EXTERIOR ACCESSORIES & OPT, 100" PREDATOR**	**1**	**KMEM**
BA-05-2410			WINDSHIELD, 100" PREDATOR CAB	1	KMEM
BA-05-2425			WINDSHIELD WIPERS & WASHERS - 100" PREDATOR	1	KMEM
BA-05-2450			SIDE VIEWING WINDOWS NON-SLIDING - PREDATOR	1	KMEM
BA-05-2500			DARK TINT WINDOWS, SIDE VIEWING, REAR DOORS & REAR WALL	1	KMEM
BA-05-2600			GRAB RAILS EXTERIOR, KNURLED ALUMINUM EXTRUSION	1	KMEM
BA-05-2668			PREDATOR INTERIOR GRAB HANDLES - WHEELABRATED	1	KMEM
BA-05-2692			INTERIOR "A" POST GRAB HANDLE "PREDATOR" - WHEELABRATED	1	KMEM
BA-05-2725			FRONT CAB GRILLE - SHAPED PERFORATED POLISHED STAINLESS, 100" PRED, SS, PANTHER	1	KMEM
BA-05-2825			SIDE CAB GRILLES -SHAPED SHAPED PERFORATED POLISHED STAINLESS, 100" PRED, SS, PA	1	KMEM
BA-05-2900			ALUMINUM CAB WHEEL LINERS	1	KMEM
BA-05-2910			ALUMINUM CAB FENDERETTES	1	KMEM
BA-05-3000			FRONT MUD FLAPS	1	KMEM
BA-05-3500			VELVAC MIRRORS " WEST COAST" HEATED / REMOTE - W/CONVEX SPOT	1	KMEM

PART NO	S	DESCRIPTION	QTY	ID
BA-05-3690		MIRROR CONTROL IN MULTIPLEX CONTROL SCREEN	1	KMEM
BA-05-5115		INTERIOR TRIM, 100" PREDATOR	1	KMEM
BA-05-5180		CUSTOM CAB INTERIOR PAINT - TEXTURED GRAY	1	KMEM
BA-05-5200		PREDATOR REAR INTERIOR CAB WALL, GRAY DURAWEAR UPHOLSTERY	1	KMEM
BA-05-5335		TREAD PLATE KICK PLATE ON LOWER INTERIOR REAR WALL	1	KMEM
BA-05-5530	>	STORAGE COMPARTMENTS UNDER FRONT SEATS - 100" PREDATOR	1	KMEM
BA-05-5610		BARYFOL FLOORING	1	KMEM
BA-05-5650		1" ACOUSTICAL INSULATION	1	KMEM
BA-05-5824		ENGINE ENCLOSURE 100" PREDATOR FAB DASH (DURAWEAR)	1	KMEM
BA-05-5860		ENGINE ENCLOSURE MATERIAL - ALUMINUM CAB	1	KMEM
BA-05-7040		SUN VISORS, 100" PREDATOR CAB, PADDED VINYL	1	KMEM
BA-06-0400	>	DELETED - TOP ROLLOVER PROTECTION SYSTEM	1	KMEM
		****** HEADER - CAB SEATING & ACCESSORIES, 100" - PREDATOR MFD**	**1**	**KMEM**
		****** SEATING OPTIONS USSC, 100" - PREDATOR - MFD - NON ROLLTEK**	**1**	**KMEM**
BA-06-329H		DRIVERS SEAT, USSC AIR SUSPENSION, ABTS	1	KMEM
BA-06-389K		OFFICERS SEAT, USSC - FIXED BASE, SCBA, ABTS	1	KMEM
BA-06-3910		ZICO ULLH SCBA BOTTLE BRACKET - OFFICER'S SEAT	1	KMEM
		MFD CAB - REAR FACING USSC SEATS - NON ROLLTEK	**1**	**KMEM**
BA-06-414H		USSC SCBA ABTS REAR FACING, OUTBOARD, DS	1	KMEM
BA-06-4180		ZICO ULLH SCBA BOTTLE BRACKET - OUTBOARD, DS	1	KMEM
BA-06-424H		USSC SCBA ABTS REAR FACING, OUTBOARD, OS	1	KMEM
BA-06-4280		ZICO ULLH SCBA BOTTLE BRACKET - OUTBOARD, OS	1	KMEM
		MFD CAB - FORWARD FACING USSC SEATS - NON ROLLTEK	**1**	**KMEM**
BA-06-7200		**** DELETE FORWARD FACING SEAT RISER - NOT REQUIRED	1	KMEM
BA-06-8055		NO SCBA PARADE COVERS SUPPLIED	1	KMEM
BA-06-8150		USSC SEATING MATERIAL - BLACK CORDURA	1	KMEM
		****** HEADER - VEHICLE DATA RECORDER SYSTEMS**	**1**	**KMEM**
BA-06-9103	>	CLASS ONE SEAT BELT WARNING SYSTEM - UP TO 6 POSITIONS - ULTRAVIEW DISP	1	KMEM
BA-06-9115		FOUR (4) SEATING POSITIONS	1	KMEM
BA-06-9250	>	HELMET HOLDERS - IN CAB - ZICO	4	KMEM
BA-06-9310		CLASS ONE VEHICLE DATA RECORDER - MULTIPLEX	1	KMEM
		****** HEADER - CAB INTERIOR ACCESSORIES & OPTIONS, 100" PREDATOR**	**1**	**KMEM**
BA-07-7010	>	STANDARD #MATM RADIO ANTENNA INSTALLED	1	KMEM
		****** HEADER - INSTRUMENTATION & CONTROLS, 100" PREDATOR - NARROW VISTA**	**1**	**KMEM**
BA-08-0214		DASH & CENTER CONSOLE - 100" PREDATOR FAB DASH (UPHOLSTERED)	1	KMEM
BA-08-0275		INSTRUMENT PANEL, 100" PREDATOR - NARROW	1	KMEM
BA-08-0300		INTER AXLE LOCK CONTROL SWITCH	1	KMEM
BA-08-0315		DIESEL EXHAUST FLUID LEVEL GAUGE	1	KMEM
BA-08-0320		ENGINE COMPRESSION BRAKE CONTROLS	1	KMEM
BA-08-0620		ULTRAVIEW 450 DISPLAY ON CAB DASH FOR ES-KEY SYSTEM	1	KMEM
BA-08-1220		INDICATOR CLUSTER, 100" PREDATOR	1	KMEM
BA-08-1225		"INTER AXLE LOCK" INDICATOR CLUSTER	1	KMEM
BA-08-1235		"ATC DISABLED" INDICATOR CLUSTER	1	KMEM
BA-08-1240		"ATC ACTIVE" INDICATOR CLUSTER	1	KMEM
BA-08-1265		"OUTRIGGERS NOT STOWED" INDICATOR ON DASH	1	KMEM
BA-08-1800		LOWER RIGHT AUXILIARY SWITCH PANEL - PREDATOR - FAB	1	KMEM
BA-08-1900		PUMP SHIFT CONTROL ON LOWER LEFT DASH PANEL	1	KMEM
BA-08-1950		MULTIPLEX CONTROL PUMP SHIFT SWITCH - MULTIPLEX	1	KMEM
BA-08-2000		AERIAL LADDER, LADDER POWER/PTO SWITCHES IN CAB	1	KMEM
BA-08-2750		PREDATOR COMPUTER TERMINAL IN FRONT OF OFFICER (FABRICATED)	1	KMEM
BA-08-2905		OVERHEAD ABS PANEL, FLAT FACED, 100" PREDATOR	1	KMEM
BA-08-3105		HEATER/DEFROSTER & ACCESS, PREDATOR 100" - 10" RAISED ROOF	1	KMEM
BA-08-6900		HVAC CONTROL SYSTEM - INCOPORATED INTO MULTIPLEX CONTROL DISPLAY	1	KMEM
BA-08-9000		CAB TILT SYSTEM & OPTIONS	1	KMEM
BA-08-9010	>	AUXILIARY - MANUAL CAB LIFT BACKUP SYSTEM	1	KMEM
BA-08-9110		PARKING BRAKE/CAB TILT INTERLOCK	1	KMEM
		FRAME & AXLE PACKAGE, MID-MOUNT TANDEM AXLE CHASSIS	**1**	**KMEM**

PART NO	S	DESCRIPTION	QTY	ID
BA-09-5500		110,000 PSI FRAME: MID-MOUNT AERIAL CHASSIS, SPECIAL FRAME	1	KMEM
		HEADER - FRONT BUMPER, EXTENSIONS & ACCESSORIES	**1**	**KMEM**
BA-10-0057	>	BUMPER 12" PAINTED 3/8" STEEL BUMPER - ALL CABS	1	KMEM
BA-10-0100	>	6" FRONT BUMPER EXTENSION WITH TREAD PLATE GRAVEL SHIELD	1	KMEM
BA-10-0405		TREADPLATE GRAVEL SHIELD STANDARD INSTALLATION	1	KMEM
BA-10-2010		TWO (2) PAINTED TOW HOOKS BELOW FRONT BUMPER	1	KMEM
BA-14-0170		23,000# FRONT AXLE MERITOR MFS-20-133A-N	1	KMEM
BA-14-1110		MERITOR, EX-225 17" DISC BRAKES, FRONT AXLE, W/ AUTO SLACK ADJUSTMENT	1	KMEM
BA-14-2040		SUSPENSION FRONT - 23,000# AXLES	1	KMEM
BA-14-2110		FRONT AXLE SHOCK ABSORBERS - MONROE "MAGNUM - 70"	1	KMEM
BA-15-1060		58,000# TANDEM REAR AXLE MERITOR RT-58-185	1	KMEM
BA-15-1505		16.5" X 8.6" S-CAM BRAKES - MERITOR REAR TANDEM W/ AUTO SLACK ADJ.	1	KMEM
BA-15-2810		VEHICLE TOP SPEED - 2016 NFPA STATEMENT	1	KMEM
BA-15-4640	>	RIDEWELL "DYNALASTIC" 202S RUBBER BLOCK SUSPENSION, TANDEM AXLE 58,000#	1	KMEM
		****** HEADER - BRAKE SYSTEM, TANDEM AXLE VEHICLE**	**1**	**KMEM**
BA-20-1005		BRAKE SYSTEM, TA CHASSIS	1	KMEM
BA-20-1110		ABS BRAKING FOR TANDEM REAR AXLE CHASSIS	1	KMEM
BA-20-1275	>	ELECTRONIC STABILITY CONTROL (ESC) WITH (ATC) - CUSTOM TA	1	KMEM
BA-20-1530		AIR RESERVOIRS 7100 CU IN TA, BASE	1	KMEM
BA-20-2005		AUTOMATIC MOISTURE EJECTOR ON THE PRIMARY TANK	1	KMEM
BA-20-2025		1/4 TURN DRAIN VALVES ON ALL AIR TANKS	1	KMEM
BA-20-3010		ROCKWELL/WABCO SYSTEM SAVER #1200, AIR DRYER HEATED	1	KMEM
BA-20-5005		COLOR CODED SYNFLEX BRAKE LINES W/QUICK RELEASE FITTINGS - TA	1	KMEM
BA-20-5500		AIR COMPRESSOR -WABCO 18.7 CFM- STD. FOR ALL CUMMINS ENGINES	1	KMEM
BA-20-5810		BRAKE TREADLE VALVE	1	KMEM
BA-20-6010		PARKING BRAKE CONTROL - NEAR DRIVER - ALL WHEEL LOCK	1	KMEM
		HEADER, TIRE AND WHEEL OPTIONS	**1**	**KMEM**
		HEADER, WHEELS, 23,000 FRONT AXLE - ALUMINUM	**1**	**KMEM**
BA-25-1010		FRONT WHEELS, MILL ALUMINUM DISC TYPE - PAINTED 22.5 X 13, 24,390#	1	KMEM
BA-25-1025		FRONT WHEELS, STAINLESS STEEL SIMULATOR KIT (2)	1	KMEM
BA-25-2030	>	FRONT, GOODYEAR 425/65R22.5 L 24,400# G296 MSA MIXED - 68MPH	1	KMEM
BA-25-2400		GOODYEAR - FIRE SERVICE RATING - TIRE RESTRICTIONS	1	KMEM
		HEADER, TIRES & WHEELS, 58,000 TANDEM REAR AXLE	**1**	**KMEM**
BA-25-5015	>	REAR WHEELS, STEEL DISC TYPE, 22.5 X 9, TA	1	KMEM
BA-25-5040		REAR WHEELS, LUG AND HUB TRIM, TA (STEEL)	1	KMEM
BA-25-7055	>	REAR, GDYR 315/80R22.5 J 64,000# RHD II+ TRACTION - 75MPH, TA	1	KMEM
BA-25-7400		GOODYEAR - FIRE SERVICE RATING - TIRE RESTRICTIONS	1	KMEM
BA-25-9905		TIRE PRESSURE MONITORING - LED VALVE STEM CAPS - TEN TIRES	1	KMEM
		100" PREDATOR - ENGINE PACKAGE, MID-MOUNT TANDEM AXLE CHASSIS	**1**	**KMEM**
		****** 100" - HEADER, ENGINE & ENGINE COMPONENTS**	**1**	**KMEM**
BA-30-3195	>	CUMMINS ISX12 - 450 HP @ 1800 RPM TQ 1550 lb-ft @ 1100 - PREDATOR NARROW	1	KMEM
BA-30-9810		PROPOSED - ENGINE CERTIFICATION CUSTOM CHASSIS	1	KMEM
BA-32-0035		COOLING/RADIATOR, 100" PREDATOR - NARROW	1	KMEM
BA-32-0070		ENGINE COOLANT FILTER - CUMMINS ISC - ISX	1	KMEM
BA-32-0085		COOLING SYSTEM CRITERIA	1	KMEM
BA-32-0100		TRANSMISSION COOLER	1	KMEM
BA-32-0120		RADIATOR SKID PLATE	1	KMEM
BA-32-0160		CHARGED AIR COOLER (FRONT MOUNT)	1	KMEM
BA-32-0245		COOLANT FAN, W/CLUTCH - CUMMINS ISX12	1	KMEM
BA-32-0340		HEATER AND COOLANT HOSES/PIPING	1	KMEM
BA-32-0420		LOW COOLANT INDICATOR LIGHT AND ALARM IN CAB	1	KMEM
BA-33-0020	>	SECONDARY BRAKING - ENGINE COMPRESSION BRAKE	1	KMEM
BA-33-0150		FAST IDLE CONTROL FOR ALL ELECTRONIC ENGINES - SMART WHEEL	1	KMEM
BA-33-0160		ENGINE AIR CLEANER	1	KMEM
BA-33-0180		SPARK ARRESTOR	1	KMEM
BA-33-0200		ACCELERATOR PEDAL - FLOOR MOUNT	1	KMEM

PART NO	S	DESCRIPTION	QTY	ID
BA-33-0250		REMOTE THROTTLE & INTERLOCK HARNESS	1	KMEM
BA-40-0300		ALLISON 4000EVS TRANS. - COMPRESSION BRAKE	1	KMEM
BA-40-0660		FIVE (5) SPEED AUTOMATIC TRANSMISSION - 4000 SERIES	1	KMEM
BA-40-0700		ALLISON TRANSMISSIONS, ELECTRONIC TOUCH PAD SHIFTER IN CAB	1	KMEM
BA-40-0855		TRANSMISSION OIL LEVEL SENSOR	1	KMEM
BA-40-0860		ALLISON PARK TO NEUTRAL	1	KMEM
BA-40-0910		ALLISON PRESELECT PROGRAMMING	1	KMEM
BA-40-0920		PRESELECT PROGRAMMED FOR 4TH GEAR	1	KMEM
BA-40-4720		TES-389 TRANS FLUID 4000EVS TRANSMISSION	1	KMEM
BA-45-0110		DRIVE LINES DANA-SPICER #1810 SERIES	1	KMEM
BA-49-0100		DIESEL EXHAUST FLUID TANK - 5 GALLON	1	KMEM
BA-50-0110		EXHAUST SYSTEM - DPF & SCR SYSTEM - INLINE SYSTEM	1	KMEM
BA-50-0155		ALUMINIZED STEEL EXHAUST TAILPIPE/OUTLET OS - DPF + SCR SYSTEM	1	KMEM
BA-50-2500		FUEL SYSTEM	1	KMEM
BA-50-2515	>	FUEL TANK - 65 GALLON, STEEL - ALL MID-MOUNTS	1	KMEM
BA-50-2625		FUEL LINES - FIBER REINFORCED HOSE	1	KMEM
BA-50-2645	>	CUMMINS FUEL-WATER SEPARATOR	1	KMEM
BA-50-2670		FUEL PUMP SECONDARY ELECTRIC, REQ. ON 210" W-B OR LONGER	1	KMEM
BA-50-2700		FUEL POCKET, LEFT SIDE REAR WHEEL WELL PANEL	1	KMEM
BA-50-5050	>	STEERING - DUAL SHEPPARD POWER STEERING GEARS	1	KMEM
BA-50-7115		STEERING COLUMN - CLOCK SPRING "NARROW"	1	KMEM
BA-50-7155		18" STEERING WHEEL - 4 SPOKE - "NARROW"	1	KMEM
BA-50-7170		SMART WHEEL CONTROLS ON STEERING WHEEL	1	KMEM
BA-50-9000		ROAD SAFETY KITS	1	KMEM
		****** HEADER, MM LADDER CHASSIS ELECTRICAL, 100" PREDATOR (OPTIONS)**	**1**	**KMEM**
		****** HEADER, MM LADDER W/ PUMP BODY ELECTRICAL (OPTIONS)**	**1**	**KMEM**
BE-01-0005		PREDATOR CHASSIS ELECTRICAL SYSTEM DESCRIPTION	1	KMEM
BE-01-0105		PREDATOR CHASSIS WIRING INSTALLATION	1	KMEM
BE-01-0150		DIRECT BATTERY GROUNDING STRAP - PREDATOR	1	KMEM
BE-01-0153		EMI/RFI PROTECTION	1	KMEM
BE-01-0205		PREDATOR 12 VOLT ELECTRICAL SYSTEM TESTING	1	KMEM
BE-05-0353		CLASS-1 ES-KEY MULTI-PLEXED ELECTRICAL SYSTEM 100" PREDATOR	1	KMEM
BE-05-0450		CLASS-1 ES-KEY ULTRAVIEW 450 DISPLAY	1	KMEM
BE-05-0800		INTER-LOCK MODULE FOR MULTIPLEX SYSTEM	1	KMEM
BE-05-0900		CHASSIS DIAGNOSTICS SYSTEM	1	KMEM
BE-05-1160		VOLTAGE MONITORING SYSTEM - 12 VOLT	1	KMEM
BE-05-1165		INDICATOR LIGHT AND ALARM PROVE-OUT SYSTEM	1	KMEM
BE-05-1170		SEQUENCER	1	KMEM
BE-05-1175		ELECTRICAL HARNESS INSTALLATION - 12 VOLT	1	KMEM
BE-10-0487		DELCO REMY 40SI, 320 AMP BRUSHLESS ALTERNATOR	1	KMEM
BE-15-0680		BATTERIES - FIVE (5) EXIDE GROUP 31, 925CCA	1	KMEM
BE-15-1105		PREDATOR BATTERY STORAGE, STEEL, MFD, XMFD, LFD, XLFD	1	KMEM
BE-15-1500		BATTERY DISCONNECT SWITCH, ALL UNITS	1	KMEM
BE-15-1555		COLE HERSEE BATTERY JUMPER STUDS, DS BATTERY BOX	1	KMEM
BE-20-1615		120 VOLT RECEPTACLE FOR ON-BOARD BATT. CHARGER - CUSTOM	1	KMEM
BE-20-1715		SHORELINE RECEPTACLE LABEL - NFPA	1	KMEM
BE-20-1750		SHORELINE LOCATION - ADJACENT TO DRIVER'S DOOR	1	KMEM
BE-20-2000		KUSSMAUL MODEL 1200, 40AMP, BATTERY CHARGER	1	KMEM
BE-30-0100		CONTROL SWITCHING - EATON MULTIPLEX SWITCHES - 12 ABOVE DRIVER	1	KMEM
BE-30-0120		CONTROL SWITCHING - EATON MULTIPLEX SWITCHES - 9 LOWER PANEL	1	KMEM
BE-30-2500		CONTROL SWITCHING LABELING	1	KMEM
BF-00-0515		WELDON #8080-8000-13 WHITE/RED LED INTERIOR LIGHTS (4)	1	KMEM
BF-00-5000		DOOR OPEN INDICATOR W/ INTEGRAL AUDIBLE ALARM	1	KMEM
		****** HEADER, 12V POWER/ USB CHARGING/ POWER - GROUND CIRCUITS, CUSTOM ******	**1**	**KMEM**
BF-01-1020	>	12 VOLT POWER PORT LOCATED IN CAB AS DIRECTED	1	KMEM
BF-01-4200	>	KUSSMAUL USB CHARGING PORT LOCATED IN CAB AS DIRECTED	1	KMEM
BF-01-6000		12 VOLT POWER AND GROUND CIRCUIT FOR ACCESSORIES IN DASH	1	KMEM
		****** HEADER, REAR/SIDE VISION CAMERA SYSTEMS ******	**1**	**KMEM**

PART NO	S	DESCRIPTION	QTY	ID
BF-20-0000		DUAL HEADLIGHTS, HALOGEN, PREDATOR - DUAL BEZELS	1	KMEM
BF-20-0320		DAYTIME RUNNING LIGHTS, ALL CABS	1	KMEM
BG-00-0055		DUAL MODULE w/ CODE 3 65STA LED TURN SIGNAL & REQ WARN LIGHT	1	KMEM
BG-00-0420		CUST MM LADDER CHASSIS LED MARKER LIGHTS	1	KMEM
BG-00-0520		CUST MM LADDER BODY LED MARKER LIGHTS	1	KMEM
BG-00-1200		WHELEN LED MARKER LIGHTS @ TOP FRONT ROOF EDGE OF CAB	1	KMEM
BG-00-1600		TRUCK-LITE MARKER LIGHTS @ EA SIDE OF CAB, ADJACENT TO DRIVER DOOR	1	KMEM
BG-00-1610		TRUCK-LITE MARKER/TURN LIGHTS @ EA SIDE OF BODY	1	KMEM
BG-00-1660		TRUCK-LITE MARKER LIGHTS @ REAR OF BODY	1	KMEM
BG-00-1800		TRUCK-LITE DOT AMBER REFLECTORS @ SIDE OF BODY	1	KMEM
BG-00-1810		TRUCK-LITE DOT RED REFLECTORS @ REAR OF BODY	1	KMEM
BG-00-2915		TECNIQ #L10 LED LICENSE PLATE LIGHT @ DS REAR OF BODY	1	KMEM
BG-02-1500		WELDON #2010 HAL. BRAKE, REVERSE, & TURN	1	KMEM
BH-04-1050		CAB STEP LIGHTS, TECNIQ EON 3 LED, ALL DEVICES	4	KMEM
BH-04-1130		BODY STEP LIGHTS, TECNIQ EON 3 LED, ALL DEVICES	4	KMEM
BH-05-2310		AERIAL ACCESS LADDER ILLUMINATION - WHELEN 3" LED - MM BODY	1	KMEM
	>	****** HEADER, HOSE BED LIGHTING ******	**1**	**KMEM**
BH-06-0100		UNITY HOSE BED LIGHTS, ALL DEVICES	1	KMEM
BH-06-2200		HOSE BED WORK LIGHT - SWITCH	1	KMEM
		****** HEADER, SCENE LIGHTS - MM / TDA**	**1**	**KMEM**
		****** HEADER, SCENE LIGHTS - MM PLATFORM W/ PUMP**	**1**	**KMEM**
BH-11-0500		NFPA (4) JW SPEAKER LED RECTANGLE GROUND LIGHTS, BELOW CAB DOORS	1	KMEM
BH-11-0560		GROUND LIGHTS, 2 LED BELOW PUMP PANEL RUNNING BOARD - RH	1	KMEM
BH-11-0585		GROUND LIGHTS, 2 LED, AT REAR BODY CORNERS - RH	1	KMEM
		****** HEADER, BROW AND CAB RADIUS LIGHTS - CUSTOM CHASSIS**	**1**	**KMEM**
		****** HEADER, TELESCOPING LIGHTS, REAR OF CAB - CUSTOM CHASSIS**	**1**	**KMEM**
BI-00-0200		AERIAL BODY ELECTRICAL SYSTEM	1	KMEM
BI-00-0205		AERIAL BODY ELECTRICAL JUNCTION COMPARTMENT	1	KMEM
BI-00-0215		MID-MOUNT, AERIAL DEVICE ELECTRICAL JUNCTION COMPARTMENT	1	KMEM
BI-00-0525		BODY ELECTRICAL HARNESS - ES-KEY	1	KMEM
BJ-00-5115		PUMP ENCLOSURE WORK LIGHTS - TECNIQ LED	1	KMEM
BJ-00-5165		ENGINE COMPARTMENT WORK LIGHTS - TECNIQ LED	1	KMEM
		COMPARTMENT LIGHTS - MID MOUNT TANDEM AXLE	**1**	**KMEM**
BJ-02-1055	>	COMPT. LIGHTS, TECNIQ E18 LED	11	KMEM
		****** CUSTOM MID MOUNT AERIAL NFPA WARNING LIGHT PACKAGE**	**1**	**KMEM**
BL-95-0000		NFPA COMPLIANT WARNING LIGHT PACKAGE - ALL UNITS	1	KMEM
BL-95-0100		LIGHT PACKAGE ACTUATION/CONTROLS - ALL UNITS	1	KMEM
BL-98-0000		WARNING LIGHT FLASH PATTERN - NFPA FLASH PATTERN	1	KMEM
BM-00-0204		CODE 3 UPPER PACKAGE - CUSTOM MID MOUNT AERIAL	1	KMEM
BM-02-0086	>	A-UPPER, CODE 3 LED 2780NFPA P1, RX 2700 80" PRIZM II BAR	1	KMEM
BM-02-1000		C-UPPER, CODE 3 HALOGEN 550 BEACONS, RED DRIVER, AMBER OFFICER	1	KMEM
BM-02-2000		B/D-UPPER REAR, COVERED BY LIGHTS IN ZONE C-UPPER	1	KMEM
BM-02-3000		B/D-UPPER FRONT, COVERED BY LIGHTS IN ZONE A-UPPER	1	KMEM
BM-07-0204		CODE 3 LOWER PACKAGE - CUSTOM MID MOUNT AERIAL	1	KMEM
BM-09-0018	>	A-LOWER FRONT, CODE 3 65 SERIES LED	1	KMEM
BM-09-0098		A-LOWER FRONT MOUNTING, CUSTOM CHASSIS	1	KMEM
BM-09-1014	>	C-LOWER REAR, CODE 3 65 SERIES LED	1	KMEM
BM-09-2006	>	B/D-LOWER FRONT, CODE 3 65 SERIES LED	1	KMEM
BM-09-2098		B/D-LOWER FRONT MOUNTING, CUSTOM CHASSIS	1	KMEM
BM-09-3006	>	B/D-LOWER MID, CODE 3 65 SERIES LED	1	KMEM
BM-09-3506	>	B/D-LOWER SECONDARY MID, CODE 3 65 SERIES LED	1	KMEM
BM-09-4006	>	B/D-LOWER REAR, CODE 3 65 SERIES LED	1	KMEM
BM-15-0000		LIGHT PACKAGE NFPA CERTIFICATION - ALL UNITS	1	KMEM
		****** HEADER, OPTIONAL WARNING LIGHTS**	**1**	**KMEM**
		****** HEADER, AUDIBLE WARNING & COMMUNICATION EQUIPMENT**	**1**	**KMEM**
BW-00-0510		CHASSIS SINGLE ELECTRIC (DOT) HORN	1	KMEM
BW-00-0560		CODE 3, #CA278, BACK-UP ALARM - 87DBA	1	KMEM
BW-00-5000	>	DUAL CHROME AIR HORNS	1	KMEM

PART NO	S	DESCRIPTION	QTY	ID
BW-00-5100		DUAL AIR HORNS RECESSED IN FRONT BUMPER, STD	1	KMEM
BW-00-5200		AIR HORN CTRL - FOOT FOR OFFICER & STEERING WHEEL FOR DRIVER	1	KMEM
BW-01-0120		SIREN, WHELEN # 295HFS2, 100W - FLUSH MOUNT	1	KMEM
BW-01-1020		ONE (1) WHELEN SA315P SPEAKER	1	KMEM
		****** HEADER, PUMP, TANK & ACC, 100' HD 4-SECT, MM**	**1**	**KMEM**
DC-00-2365		WATEROUS S100, 1750 GPM SINGLE STAGE PUMP - MID MOUNT	1	KMEM
DC-01-4630		WATEROUS S100 MECHANICAL PUMP SEAL	1	KMEM
DC-01-6211		WATEROUS "C20" DRIVE UNIT, WATEROUS MID-MOUNT (FRONT DRIVE)	1	KMEM
DC-01-6490		PUMP RATIO (HALE, WATEROUS OR DARLEY)	1	KMEM
DC-01-7140		WATEROUS AIR SHIFT	1	KMEM
DC-01-8590		PUMP SHIFT MANUAL OVERRIDE (HALE, WATEROUS OR DARLEY)	1	KMEM
DC-01-8615		WATEROUS PUMP SHIFT INDICATOR LIGHTS	1	KMEM
DC-01-9020		TRANSMISSION LOCK-UP (HALE, WATEROUS OR DARLEY)	1	KMEM
DC-02-1900		PUMP MOUNTS - MID-SHIP PUMPS	1	KMEM
DC-02-1990		PUMP INSTALLATION - CUSTOM	1	KMEM
DC-04-0120		MANIFOLD - DISCHARGE & SUCTION FOR 1250-2000 GPM INTERFACE PUMPING SYSTEM	1	KMEM
		****** HEADER, WATEROUS S100, PRESSURE CONTROL - MID MOUNT**	**1**	**KMEM**
DC-05-1225		FIRE RESEARCH "IN CONTROL" TGA-300 PRESSURE GOVERNOR	1	KMEM
DC-05-1295		TASK FORCE TIPS #A18 SERIES INTAKE RELIEF VALVE	1	KMEM
DC-05-2500		PUMP UL CERTIFICATION - 750 GPM & UP	1	KMEM
		WATEROUS, PUMP PRIMING PUMP AND CONTROLS	**1**	**KMEM**
DC-05-3680	>	TRIDENT "MANUAL" AIR PRIMING SYSTEM	1	KMEM
		WATEROUS, DRAINS & ACCESSORES	**1**	**KMEM**
DC-05-5110		ROTARY MASTER DRAIN VALVE	1	KMEM
DC-05-5400		DRAINS/BLEEDER "INNOVATIVE CONTROLS" LIFT UP @ ALL 1-1/2" OR LARGER	1	KMEM
DC-05-5500		SYNFLEX SUCTION, DISCHARGE, PRESSURE AND CONTROL LINES	1	KMEM
DC-05-6220		WATEROUS ANODE BLOCKS - 2 TOTAL	1	KMEM
DC-10-2020		SIDE MOUNT PUMP MODULE, MM AERIAL	1	KMEM
DC-10-2500		PUMP MODULE - STEEL CONSTRUCTION	1	KMEM
DC-10-3300		ONE (1) HADES15K BTU HOT WATER HEATER FOR PUMP ENCLOSURE	1	KMEM
		****** HEADER, SUCTIONS - MIDMOUNT, SIDE MOUNT**	**1**	**KMEM**
DC-14-3340		WATEROUS MAIN SUCTION INLETS 6" NST, 1750 GPM S100 PUMP	1	KMEM
DC-14-5560	>	6" NST MAIN PUMP SUCTION PRESSURE VENTED CAPS (2)	1	KMEM
		HEADER - AUXILIARY SUCTION/S - AERIALS	**1**	**KMEM**
DC-20-1000		2 1/2" AUX. SIDE SUCTION @ DS PANEL TO REAR OF MAIN INLET	1	KMEM
DC-20-1100		2 1/2" AKRON #8800 S.S. BALL VALVE, DS REAR AUX SUCTION	1	KMEM
DC-20-1200		SWING CONTROL @ VALVE, DS REAR AUX SUCTION	1	KMEM
DC-20-9500		BEHIND PANEL MOUNT	1	KMEM
		****** HEADER - TANK TO PUMP - MID-MOUNTS**	**1**	**KMEM**
DC-25-1200		TANK TO PUMP - 3" VALVE - LADDERS & PLATFORMS	1	KMEM
DC-25-3110		3" AKRON #8800 SERIES - S.S. BALL, VALVE , TANK TO PUMP	1	KMEM
DC-25-5110		3" PUSH/PULL CONTROL FOR TANK TO PUMP	1	KMEM
		****** HEADER - TANK FILL - MID-MOUNTS**	**1**	**KMEM**
DC-30-2100		TANK FILL LINE 2" FROM PUMP - SIDE MOUNT	1	KMEM
DC-30-2300		2" AKRON #8800 SERIES - S.S. BALL TANK FILL, SIDE MOUN	1	KMEM
DC-30-6500		PUSH/PULL CONTROL FOR TANK FILL	1	KMEM
		****** DISCHARGES & ACCESSORIES, MID MOUNT AERIAL - SIDE MOUNT**	**1**	**KMEM**
		DRIVER'S SIDE #1 MAIN DISCHARGE	**1**	**KMEM**
DC-35-0010		DS MAIN DISCHARGE #1 - SIDE MOUNT	1	KMEM
DC-35-0110		2 1/2" AKRON #8800 SERIES - S.S. BALL, DS #1, SIDE MOUNT	1	KMEM
DC-35-1815		DS #1 DISCH - 2 1/2" STRAIGHT NST & 30-DEGREE NST ELBOW	1	KMEM
DC-35-2010		2 1/2" NST PRESSURE VENTED CAP - DS DISCHARGE #1	1	KMEM
DC-35-2410		PUSH/PULL CONTROL FOR DS DISCHARGE #1 -SIDE MOUNT	1	KMEM
DC-35-3110		INNOVATIVE CONTROLS LIQUID FILLED 2 1/2" PRESS GAUGE SS- DS DISCHARGE #1	1	KMEM
		DRIVER'S SIDE #2 MAIN DISCHARGE	**1**	**KMEM**
DC-35-5010		DS MAIN DISCHARGE #2 - SIDE MOUNT	1	KMEM
DC-35-5110		2 1/2" AKRON #8800 SERIES - S.S. BALL, DS #2, SIDE MOUNT	1	KMEM

PART NO	S	DESCRIPTION	QTY	ID
DC-35-6815		DS #2 DISCH - 2 1/2" STRAIGHT NST & 30-DEGREE NST ELBOW	1	KMEM
DC-35-7010		2 1/2" NST PRESSURE VENTED CAP - DS DISCHARGE #2	1	KMEM
DC-35-7410		PUSH/PULL CONTROL FOR DS DISCHARGE #2 -SIDE MOUNT	1	KMEM
DC-35-8110		INNOVATIVE CONTROLS LIQUID FILLED 2 1/2" PRESS GAUGE SS- DS DISCHARGE #2	1	KMEM
		OFFICER'S SIDE #1 MAIN DISCHARGE	**1**	**KMEM**
DC-39-0010	>	OS MAIN DISCHARGE #1 - SIDE MOUNT	1	KMEM
DC-39-0110		2 1/2" AKRON #8800 SERIES - S.S. BALL, OS #1, SIDE MOUNT	1	KMEM
DC-39-1815		OS #1 DISCH - 2 1/2" STRAIGHT NST & 30-DEGREE NST ELBOW	1	KMEM
DC-39-2010		2 1/2" NST PRESSURE VENTED CAP - OS DISCHARGE #1	1	KMEM
DC-39-2410		PUSH/PULL CONTROL FOR OS DISCHARGE #1 -SIDE MOUNT	1	KMEM
DC-39-3110		INNOVATIVE CONTROLS LIQUID FILLED 2 1/2" PRESS GAUGE SS- OS DISCHARGE #1	1	KMEM
		OFFICER'S SIDE #2 MAIN DISCHARGE	**1**	**KMEM**
DC-39-5010	>	OS MAIN DISCHARGE #2 - SIDE MOUNT	1	KMEM
DC-39-5110		2 1/2" AKRON #8800 SERIES - S.S. BALL, OS #2, SIDE MOUNT	1	KMEM
DC-39-6815		OS #2 DISCH - 2 1/2" STRAIGHT NST & 30-DEGREE NST ELBOW	1	KMEM
DC-39-7010		2 1/2" NST PRESSURE VENTED CAP - OS DISCHARGE #2	1	KMEM
DC-39-7410		PUSH/PULL CONTROL FOR OS DISCHARGE #2 -SIDE MOUNT	1	KMEM
DC-39-8110		INNOVATIVE CONTROLS LIQUID FILLED 2 1/2" PRESS GAUGE SS- OS DISCHARGE #2	1	KMEM
		CROSSLAY #1 DISCHARGE	**1**	**KMEM**
DC-47-0400		CROSSLAY #1, 1 1/2" - AERIAL	1	KMEM
DC-47-1110		CROSSLAY #1 CAPACITY - 200' OF 1 3/4" HOSE	1	KMEM
DC-47-1410		CROSSLAY #1 - DOUBLE STACK HOSE DESIGN	1	KMEM
DC-47-1510		1 1/2" NST CHICKSAN SWIVEL - CROSSLAY #1	1	KMEM
DC-47-2110		CROSSLAY #1, PLUMBING, 2" STAINLESS STEEL PIPING	1	KMEM
DC-47-2210		2" AKRON #8800 SERIES - S.S. BALL, VALVE CROSSLAY #1, DISCH	1	KMEM
DC-47-2610		PUSH/PULL 1/4 TURN CONTROL CROSSLAY #1	1	KMEM
DC-47-3210		INNOVATIVE CONTROLS LIQUID FILLED 2 1/2" PRESS GAUGE SS - CROSSLAY #1	1	KMEM
		CROSSLAY #2 DISCHARGE	**1**	**KMEM**
DC-47-5400		CROSSLAY #2, 1 1/2" - AERIAL	1	KMEM
DC-47-6110		CROSSLAY #2 CAPACITY - 200' OF 1 3/4" HOSE	1	KMEM
DC-47-6410		CROSSLAY #2 - DOUBLE STACK HOSE DESIGN	1	KMEM
DC-47-6510		1 1/2" NST CHICKSAN SWIVEL - CROSSLAY #2	1	KMEM
DC-47-7110		CROSSLAY #2, PLUMBING, 2" STAINLESS STEEL PIPING	1	KMEM
DC-47-7210		2" AKRON #8800 SERIES - S.S. BALL, VALVE CROSSLAY #2,	1	KMEM
DC-47-7610		PUSH/PULL 1/4 TURN CONTROL CROSSLAY #2	1	KMEM
DC-47-8210		INNOVATIVE CONTROLS LIQUID FILLED 2 1/2" PRESS GAUGE SS - CROSSLAY #2	1	KMEM
		CROSSLAY OPTIONS - MM AERIAL	**1**	**KMEM**
DC-50-7015	>	VINYL CROSS LAY COVER	1	KMEM
DC-50-7030		CROSSLAY COVER RED IN COLOR	1	KMEM
	>	**WATERWAY DISCHARGE**	**1**	**KMEM**
DC-62-0225		AERIAL WATERWAY DISCHARGE - MM AERIAL	1	KMEM
DC-62-1150		WATERWAY DISCHARGE, PLUMBING, 5" STAINLESS STEEL - MM	1	KMEM
DC-62-1240		4" AKRON #8840 SERIES VALVE, WATERWAY	1	KMEM
DC-62-1950	>	AKRON HANDWHEEL GEAR VALVE CONTROL, WATERWAY	1	KMEM
DC-62-2210		INNOVATIVE CONTROLS LIQUID FILLED 2 1/2" PRESS GAUGE SS - WATERWAY	1	KMEM
		PUMP PANELS & ACCESSORIES	**1**	**KMEM**
DD-65-0510		SIDE MOUNT PUMP PANEL - MID-MOUNT	1	KMEM
DD-65-4115		SIDE MOUNT PANELS - 12 GAUGE BRUSHED STAINLESS STEEL	1	KMEM
DD-65-4715		HORIZONTALLY HINGED GAUGE PANEL - MID-MOUNT	1	KMEM
DD-65-4810		OFFICER SIDE VERTICALLY HINGED PUMP ACCESS DOOR - SIDE MOUNT	1	KMEM
DD-65-4820		PUMP ACCESS DOORS - MID-MOUNT	1	KMEM
DD-65-5150		PANEL FASTENERS	1	KMEM
DD-65-5510		CAPS AND ADAPTERS SAFETY TETHER - BALL CHAIN	1	KMEM
DD-65-8820		PUMP PANEL DISCH./SUCTION TRIM PLATES, HIGH POLISHED	1	KMEM

PART NO	S	DESCRIPTION	QTY	ID
DD-65-9000		DISCHARGE GAUGE TRIM BEZELS	1	KMEM
DD-65-9110		IDENTIFICATION PLATES	1	KMEM
DD-66-0300		PUMP OPERATOR'S PANEL LIGHT SHIELD - MID-MOUNT	1	KMEM
DD-66-0340		TECNIQ E18 LED LIGHTS - MID-MOUNT	1	KMEM
DD-66-2100		OS PUMP PANEL LIGHTING	1	KMEM
DD-66-2130		TECNIQ EON 3 LED LIGHTS - OS PUMP PANEL	1	KMEM
		PUMP OPERATOR'S PANEL - SIDE MOUNT, AERIAL - MID MOUNT	**1**	**KMEM**
DD-70-2334		FIRE RESEARCH "IN CONTROL" PRESSURE GOVERNOR CONTROL @ PANEL	1	KMEM
DD-70-2410		PUMP PRESSURE & VACUUM TEST PORTS @ PANEL	1	KMEM
DD-70-4125	>	DELETE - MASTER PRESSURE & COMPOUND GAUGES	1	KMEM
DD-70-4130		**** CONSIDER DELETING MASTER GAUGES - IN GOVERNOR DISPLAY ****	1	KMEM
DD-70-4680		PRESSURE & COMPOUND GAUGE RANGES - SINGLE STAGE	1	KMEM
DD-70-4900		AUXILIARY ENGINE COOLER	1	KMEM
		WATER TANK LEVEL GAUGE - AERIAL, MID-MOUNT	**1**	**KMEM**
DD-72-0410		FIRE RES - TANK VISION #WLA300-A00 LED WATER TANK GAUGE - PRIMARY	1	KMEM
DD-72-1300	>	FIRE RES WATER LEVEL - 1/4" NPT PRESS TRANS @ BOTTOM TANK	1	KMEM
DD-80-0110		SLIDE-OUT STEP @ DRIVER'S PUMP OPERATOR'S PANEL	1	KMEM
DE-00-1060	>	**** HEADER, MM LADDERS, WATER TANK	1	KMEM
		WATER TANKS/OPTIONS AERIALS	**1**	**KMEM**
DE-05-1700	>	UPF POLYIIE TANK, 300 GAL. - AERIAL	1	KMEM
DE-05-6000		TANK DESCRIPT, CONSTR AND MOUNT, UPF POLY IIE TANK	1	KMEM
JA-00-0100		BODY AND COMPARTMENT HEADER (ALL AERIAL DEVICES)	1	KMEM
JA-00-5040		GENERAL BODY DESCRIPTION, MID-MOUNT, 100' LADDERS	1	KMEM
TF-08-0800	>	ANY MID-MOUNT, TURNTABLE COMPTS, LH & RH SIDE, LOW BODY	1	KMEM
TF-08-2000	>	COMPARTMENTATION, 100-4-HD-MM STYLE #1H-LO	1	KMEM
		****** HEADER, MM BODY OPTIONS (WITH PUMP)**	**1**	**KMEM**
TF-10-0100		BEVELED OVERLAPPING DOORS, ALL COMPARTMENTS, ALL DEVICES	1	KMEM
TF-10-1900		BRUSHED FINISHED DOOR PANS - 2" THICK DOORS	1	KMEM
TF-10-2700		DOOR HINGE FOR BEVELED OVERLAPPING HINGED DOORS	1	KMEM
TF-10-2800		DOOR SEAL FOR BEVELED OVERLAPPING HINGED DOORS	1	KMEM
TF-10-2940		ROTARY LATCHES WITH D-RING HANDLES	1	KMEM
TF-10-3150		GAS SHOCK ON HORIZONTALLY & VERTICALLY HINGED DOORS	1	KMEM
TF-10-6000		COMPARTMENT FLOORS (AERIALS ONLY)	1	KMEM
TF-11-0500		COMPARTMENT GENERAL DESCRIPTION, ALL LADDERS & PLATFORMS	1	KMEM
TF-11-1460		PAINTED REAR BODY PANEL, MID-MOUNTS	1	KMEM
TF-11-2285		1/2 WIDTH S. S. OUTRIGGER COVER PANELS, FOUR RIGGER DEVICES	1	KMEM
TF-11-3000		BODY RUB RAILS, 1" X 1" EXTRUSION	1	KMEM
TF-12-1000		RUNNING BOARD STEPS (AERIALS ONLY)	1	KMEM
TF-13-3080		TURNTABLE BODY MODULE, MID MOUNT LADDERS	1	KMEM
TF-13-3200		MID-MOUNT, TURNTABLE LADDERS	1	KMEM
TF-13-5030		MID-MOUNT LADDER, BODY HANDRAILS, EXTRUDED ALUMINUM	1	KMEM
TF-14-1000		ALUMINUM WHEEL WELL LINERS	1	KMEM
TF-14-1710		POLISHED ALUMINUM FENDERETTES, TANDEM AXLE BODIES	1	KMEM
TF-14-3010		SIX (6) SCBA BOTTLE STORAGE COMPARTMENTS, TANDEM BODIES	1	KMEM
TF-14-5000		REAR MUD FLAPS	1	KMEM
TF-14-6500		PAINTED REAR TOW EYES, THROUGH REAR SHEET	1	KMEM
TF-15-1150		HOSE BED, MID-MOUNT AERIALS	1	KMEM
TF-15-1900		ALUMINUM HOSE BED FLOORING - AERIAL	1	KMEM
TF-15-3110		HOSE BED COVER, VINYL WITH QTR TURNS	1	KMEM
TF-15-3190		HYPALON MATERIAL RED IN COLOR	1	KMEM
		****** HEADER, COMPARTMENT ACCESSORIES - MIDMOUNTS**	**1**	**KMEM**
TJ-05-1005		ADJUSTABLE SHELF DESCRIPTION - MIDMOUNT	1	KMEM
TJ-05-2000	>	(AUTO QTY) ADJUSTABLE SHELF(S), MOUNTED AS DIRECTED	6	KMEM
TJ-15-1005		500#, FLOOR MOUNTED, ROLLOUT TRAY DESC. 70% - MIDMOUNT	1	KMEM
TJ-15-2000	>	(AUTO QTY) ROLLOUT TRAY(S), MOUNTED AS DIRECTED - 70%	2	KMEM
TJ-55-1010		SWING OUT TOOL BOARD, PAC TRAC DOUBLE FACED EXTRUSION - MIDMOUNT	1	KMEM
TJ-55-1200	>	(AUTO QTY) SWING OUT TOOL BOARD(S), MOUNTED AS DIRECTED	1	KMEM

PART NO	S	DESCRIPTION	QTY	ID
	>	**"NOTE" READ THIS BEFORE ADDING ANY ADDITIONAL GROUND LADDERS**	**1**	**KMEM**
		****** HEADER, 100-4-MM-HD GROUND LADDERS**	**1**	**KMEM**
TN-00-5065	>	CENTER LADDER STORAGE, 100-4-MM-HD	1	KMEM
TN-00-7030		HINGED PAINTED DOORS, LADDER STORAGE, MID-MOUNTS ONLY	1	KMEM
TN-01-0740		ALCO-LITE LADDER COMP, 100-4-MM-HD	1	KMEM
TN-02-1150		ALCO-LITE PEL-35 35' 2-SECTION EXTENSION LADDER (ALUM)	1	KMEM
TN-02-1170		ALCO-LITE PEL-24 24' 2-SECTION EXTENSION LADDER (ALUM)	1	KMEM
TN-02-2510		ALCO-LITE PRL-16 16' ROOF LADDER W/FOLDING HOOKS (ALUM)	2	KMEM
TN-02-7000		ALCO-LITE AEL-14 14' ATTIC EXTENSION LADDER (ALUM)	1	KMEM
TN-02-8010		ALCO-LITE FL-10 10' FOLDING ATTIC LADDER (ALUM)	1	KMEM
		****** HEADER, PIKE POLES & HOLDERS - AERIALS**	**1**	**KMEM**
TN-10-0500	>	PIKE POLE TUBE(S) - AERIALS	6	KMEM
TN-20-0000		ADDITIONAL ITEMS SHIPPED WITH VEHICLE, ALL AERIAL DEVICES	1	KMEM
		****** HEADER, LOOSE EQUIPMENT - AERIAL**	**1**	**KMEM**
TN-35-1015		TWO (2) ZICO #SAC-44 FOLDING WHEEL CHOCKS, (2) MTD DRIVER SIDE	1	KMEM
		****** HEADER, 100' H.D. LADDER, MID-MOUNT 4-SECTION - 14**	**1**	**KMEM**
TQ-00-1600		100' H.D. LADDER, MID-MOUNT 4-SECT. GEN, INTENT & DESIGN STD - 14	1	KMEM
TQ-00-3005		MOUNTING OF AERIAL, MID-MOUNTS	1	KMEM
TQ-00-3460		HEIGHT AND REACH, 100' 4-SECT. HD MM LADDER - 14	1	KMEM
TQ-00-4000		MATERIAL STANDARDS, ALL DEVICES	1	KMEM
TQ-00-5065		100' H.D. LADDER, MID-MOUNT 4-SECT. HYDRAULIC SYSTEM	1	KMEM
TQ-00-5130		PARKER HOSE KIT - 4 JACK UNIT MID MOUNT	1	KMEM
TQ-00-6120		HYDRAULIC PUMP - PRESSURE COMPENSATED	1	KMEM
TQ-00-7030		HYDRAULIC RESERVOIR - MID MOUNT	1	KMEM
TQ-00-7070		HYDRAULIC OIL - REGULAR - A/W 46 - 120 GAL	1	KMEM
TQ-00-7115		DIVERTER VALVE, MID-MOUNT DEVICES	1	KMEM
TQ-00-7230		OUTRIGGER HYDRAULIC CONTROL VALVE - MM, PROPORTIONAL	1	KMEM
TQ-00-7450		ELECTRIC TURNTABLE HYDRAULIC CONTROL VALVE, MM LADDERS	1	KMEM
TQ-00-7505		HYDRAULIC SYSTEM FILTRATION	1	KMEM
TQ-00-8560		MID-MOUNT LADDER, "IQAN" MOTION CONTROL SYSTEM - ELECTRIC CONTROLS @ TT	1	KMEM
TQ-00-8700		HYDRAULIC PUMP PRESSURE - DISPLAY	1	KMEM
TQ-00-8710		ELEVATION ANGLE OF LADDER - DISPLAY	1	KMEM
TQ-00-8715		VERTICAL HEIGHT OF LADDER - DISPLAY	1	KMEM
TQ-00-8725		DEGREE OF ROTATION FROM VEHICLE CENTERLINE - DISPLAY	1	KMEM
TQ-00-8730		E-ZONE CAB & BODY AVOIDANCE WARNING - DISPLAY	1	KMEM
TQ-00-8735		E-ZONE SHORT JACK WARNING - DISPLAY	1	KMEM
TQ-00-8740		CRADLE ALIGNMENT MESSAGE - DISPLAY	1	KMEM
TQ-00-8750		DEVICE LOAD MONITORING - DISPLAY	1	KMEM
TQ-00-8760		E-SPEED LADDER TIP SPEED CONTROL - DISPLAY	1	KMEM
TQ-00-8765		E-CUSH RAMP CONTROL FOR ELEVATION - DISPLAY	1	KMEM
TQ-00-8770		E-CUSH RAMP CONTROL FOR EXTENSION & RETRACTION - DISPLAY	1	KMEM
TQ-00-8890		WARNING MESSAGES - TURNTABLE ONLY	1	KMEM
TQ-00-9565		100'H.D. LADDER, MID-MOUNT 4-SECT. EMERG HYD. PUMP, EPU	1	KMEM
TQ-01-1000		HOT SHIFT PTO W/CONTROLS IN CAB	1	KMEM
TQ-01-1100		FAST IDLE CONTROL FOR ALL AERIAL DEVICES	1	KMEM
TQ-02-0235		100' H.D. LADDER, MID-MOUNT 4-SECTION TORQUE BOX	1	KMEM
TQ-02-1235		100' H.D. LADDER, MID-MOUNT 4-SECTION OUTRIGGERS	1	KMEM
TQ-02-1735		100' H.D. LADDER, MM 4-SECT OUTRIGGERS - HORIZONTAL CYLINDER	1	KMEM
TQ-02-1935		100' H.D. LADDER, MM 4-SECT OUTRIGGERS - VERTICAL CYLINDERS	1	KMEM
TQ-02-2100		IQAN - OUTRIGGER STRING POTENTIOMETER - TWO (2) OUTRIGGERS	1	KMEM
TQ-02-2200		OUTRIGGER/JACK FOOT PADS, FOUR (4) JACK DEVICES	1	KMEM
TQ-02-2350		AUXILARY JACK PADS, FOUR (4) 24" X 24" x 1" POLY	1	KMEM
TQ-02-2500		OUTRIGGER INTERLOCK SYSTEM & ALARM, ALL DEVICES	1	KMEM
		****** HEADER - OUTRIGGER LIGHTING, FOUR (4) OUTRIGGERS**	**1**	**KMEM**
TQ-02-5100		NO LOLLIPOP LIGHTS ON OUTRIGGER BEAMS	1	KMEM
TQ-02-5220		HALOGEN OUTRIGGER GROUND LIGHTS - RECTANGLE, 4-OUTRIGGERS	1	KMEM
TQ-02-5275		OUTRIGGER WARNING LIGHTS FROM LIGHT PACKAGE	1	KMEM
TQ-02-6005		OUTRIGGER WARNING LIGHT ACTIVATION, PRIMARY WARNING	1	KMEM
TQ-02-6800		OUTRIGGER SCOTCHLITE, WHITE	1	KMEM

PART NO	S	DESCRIPTION	QTY	ID
TQ-02-7080		MM LADDER, BUTTON OUTRIGGER CONTROLS - FOUR JACKS	1	KMEM
TQ-02-9220		OUTRIGGER LEVELS MID-MOUNT DEVICES; TWO (2)	1	KMEM
TQ-03-1500		100' H.D. LADDER, MID-MOUNT 4-SECTION TURNTABLE	1	KMEM
TQ-03-3010		TURNTABLE DECK - ALUMINUM TREADPLATE	1	KMEM
TQ-04-1852		HEEL PIN STEP ON TURNTABLE, 79', 103', 109' & 123' & 100' M.M. LADDERS	1	KMEM
TQ-04-1860		TURNTABLE HANDRAILS, KNURLED ALUMINUM, MID-MOUNTS	1	KMEM
TQ-04-2135		HEEL PINS - 75' & 100' M.M. LADDER	1	KMEM
TQ-04-2300		STAINLESS STEEL CRADLE ALIGNMENT ARROWS ON TURNTABLE	1	KMEM
TQ-04-2810		SAFETY CHAINS BETWEEN TURNTABLE HANDRAIL, MID-MOUNTS	1	KMEM
TQ-04-7600		100' H.D. LADDER, MID-MOUNT 4-SECTION TURNTABLE SWIVEL	1	KMEM
TQ-04-9000		IQAN - SWIVEL ROTATION ENCODER	1	KMEM
TQ-06-0520		100' H.D. LADDER, MID-MOUNT 4-SECT, LADDER CONSTRUCTION	1	KMEM
TQ-06-1950		100' H.D. 4-SECTION MM, LADDER DIMENSIONS - 14	1	KMEM
TQ-06-3000		RUNG COVERS - PHOTOLUMINESCENT, ALL DEVICES	1	KMEM
TQ-06-4005		SINGLE PAIR FOLDING STEPS @ LADDER TIP	1	KMEM
TQ-06-4100		RED SCOTCHLITE MATERIAL ON LAST 6' OF LADDER TIP	1	KMEM
TQ-06-4200		4' FIRE HOOKS UNLIMITED PIKE POLE MOUNTED IN FLY SECTION OF LADDER	1	KMEM
TQ-06-4240	>	PIKE POLE MOUNTED ON LEFT SIDE OF FLY SECTION	1	KMEM
TQ-06-9000		AERIAL TRAVEL SUPPORT, ALL DEVICES	1	KMEM
TQ-06-9020		CRADLE ILLUMINATION LIGHTS - HALOGEN LIGHTS	1	KMEM
TQ-07-1600		100' H.D. LADDER, MID-MOUNT 4-SECT, ELEVATION SYSTEM - 14	1	KMEM
TQ-07-2800		IQAN - INCLINOMETER	1	KMEM
TQ-07-2801		IQAN - MOMENT LOAD INDICATOR	1	KMEM
TQ-07-2805		IQAN - E-CUSH CONTROL, ELEVATION SYSTEM - LADDER	1	KMEM
TQ-08-1600		100' H.D. LADDER, MID-MOUNT 4-SECT, ROTATION SYSTEM - 14	1	KMEM
TQ-08-2800		ROTATION MOTOR AND BRAKE - 41" EXTERNAL BEARINGS	1	KMEM
TQ-08-2950		SWING DRIVE ADJUSTMENT	1	KMEM
TQ-08-3000		IQAN - "E-SPEED" SAFETY SYSTEM, LADDERS	1	KMEM
TQ-08-3100		IQAN - "E-ZONE" ROTATION SAFETY SYSTEM, 2-OUTRIGGERS	1	KMEM
TQ-08-3650		IQAN - "E-ZONE" CAB & BODY PROXIMITY SYSTEM - LADDERS	1	KMEM
TQ-09-1600		100' H.D. LADDER, MID-MOUNT 4-SECT, EXTENSION/RETRACTION SYSTEM - 14	1	KMEM
TQ-09-2350		EXTENSION CYLINDERS PAINTED LADDER PAINT COLOR	1	KMEM
TQ-09-2800		IQAN - EXTENSION SYSTEM STRING POTENTIOMETER	1	KMEM
TQ-09-2810		IQAN - "E-CUSH" EXTENSION/RETRACTION SYSTEM - LADDERS	1	KMEM
TQ-09-3048		LADDER SLIDE PADS, 100' & 101' LADDER	1	KMEM
		LADDER EXTENSION NUMBERS, ALL DEVICES	**1**	**KMEM**
TQ-09-3150		LADDER LEVEL INDICATOR (BASE SECTION) - LIGHTED	1	KMEM
TQ-09-3220		LADDER, CABLE/HOSE/WIRE ROUTING, 4-SECTIONS	1	KMEM
		****** HEADER - LADDER, 120 VOLT ELECTRICAL SYSTEM & ACCESSORIES**	**1**	**KMEM**
TQ-10-0100		LADDER, 120 VOLT ELECTRICAL SYSTEM	1	KMEM
TQ-10-0125		DELETE LADDER TIP RECEPTACLE	1	KMEM
		****** HEADER - LADDER, 12 VOLT ELECTRICAL SYSTEM & ACCESSORIES**	**1**	**KMEM**
TQ-10-1018		HEEL PIN STEP LIGHTS - TECNIQ EON 3 LED LIGHTS	1	KMEM
TQ-10-1040		TURNTABLE CONTROL CONSOLE LIGHTING - LUMA BAR LED H2O	1	KMEM
TQ-10-1060		TURNTABLE CONSOLE STEP LIGHT - TECNIQ EON 3 LED	1	KMEM
TQ-10-1110		TWO (2) UNITY SPOTS @ LADDER BASE SECTION	1	KMEM
TQ-10-1210		ONE (1) UNITY SPOT & ONE (1) FLOOD @ LADDER TIP	1	KMEM
TQ-10-2805		LADDER WALKWAY ILLUMINATION LIGHTS, 4-SECT LADDER	1	KMEM
TQ-10-2850		RED - LADDER ILLUMINATION LIGHTS	1	KMEM
TQ-12-0010		LADDER, CONTROL STATION	1	KMEM
TQ-12-0040		MM LADDERS, CONSOLE LOCATED @ LH SIDE OF TURNTABLE, STD	1	KMEM
TQ-12-0085		PAINTED ALUMINUM TURNTABLE CONSOLE - MATCH LADDER COLOR	1	KMEM
TQ-12-1700		100' H.D. LADDER, MID-MT. 4-SECT. TURNTABLE CONTROL STATION	1	KMEM
TQ-12-2520		FIRE RESEARCH INSIGHT FLOWMETER @ TURNTABLE CONSOLE	1	KMEM
TQ-12-2595		TURNTABLE CONSOLE COVER - PAINTED RADIUS	1	KMEM
TQ-14-1200		LADDER, FIRE RESEARCH ACT -2 WAY COMMUNICATION SYSTEM - LOWER CONTROL	1	KMEM
TQ-14-1205		LADDER, FIRE RESEARCH ACT 2-WAY COMMUNICATION SYSTEM - UPPER SPEAKER/MIC	1	KMEM

PART NO	S	DESCRIPTION	QTY	ID
TQ-18-0650		100' H.D. LADDER, M-M, 4-SECTION LADDER WATERWAY - 14	1	KMEM
TQ-18-1050		100' H.D. 4-SECTION LADDER, LADDER WATERWAY	1	KMEM
TQ-18-2520		4" HEEL PIN SWIVEL - 100'	1	KMEM
TQ-18-2600		AUTOMATIC WATER DRAIN/VENT	1	KMEM
TQ-18-3000		ALL DEVICES, WATERWAY RELIEF VALVE	1	KMEM
TQ-18-3020		MID-MOUNT AERIAL WATERWAY DRAIN, 1 1/2" VALVE	1	KMEM
TQ-18-4130	>	LADDER, AKRON #3480 "STREAMMASTER II" MONITOR	1	KMEM
TQ-18-4210	>	LADDER, AKRON #5178 NOZZLE	1	KMEM
TQ-18-4300		LADDER, AKRON MONITOR CONTROLS W/ AUTO STOW	1	KMEM
TQ-18-4505		LADDER, ELECTRIC SELECTABLE WATERWAY TROLLEY - NEW	1	KMEM
TQ-18-4950		"STORE FRONT BLITZ" DESCRIPTION	1	KMEM
TQ-20-1600		100' H.D. LADDER, MID-MOUNT 4-SECTION LADDER CAPACITIES - 14	1	KMEM
TQ-50-0100		FIRE DEPT AERIAL FAMILIARIZATION - PROVIDED BY FACTORY	1	KMEM
TQ-50-0140		FACTORY FAMILIARIZATION - FOUR (4) DAYS	1	KMEM
TQ-50-0600		AERIAL SERVICE, ALL DEVICES	1	KMEM
TQ-50-0700		WARNING DECALS, ALL DEVICES	1	KMEM
TQ-52-0100		AERIAL LADDER, MANUALS, TWO (2) SETS	1	KMEM
TQ-70-1600		100' H.D. LADDER MID-MOUNT, 4-SECTION CERT. & TESTING	1	KMEM
		****** HEADER - PAINT SECTION - ALL UNITS ******	**1**	**KMEM**
UA-00-1100		GENERAL PAINT DESCRIPTION - ALL	1	KMEM
UA-00-1200		GENERAL PRIMER & PREP DESCRIPTION - LADDER/PLATFORM	1	KMEM
UA-00-1400		GENERAL FINISH PAINT DESCRIPTION - LADDER/PLATFORM	1	KMEM
UA-00-2700		BODY BUFFING & FINISH - LADDER/PLATFORM	1	KMEM
		****** HEADER - LADDER/PLATFORM BODY PAINT ******	**1**	**KMEM**
UA-03-0200		INSIDE/UNDERSIDE BODY PAINTED JOB COLOR - LADDER/PLATFORM	1	KMEM
UA-03-0300		JOB COLOR COMPARTMENT INT W/SPATTER PAINT - LADDER/PLATFORM	1	KMEM
UA-03-0900		SINGLE COLOR BODY PAINT SCHEME - LADDER/PLATFORM	1	KMEM
UA-03-2200		PUMPHOUSE & PLUMBING PAINTED JOB COLOR - LADDER/PLATFORM	1	KMEM
		****** HEADER - TANDEM AXLE CUSTOM CHASSIS PAINT (AERIAL)**	**1**	**KMEM**
UA-05-0050		CUSTOM CAB PRIMER & PREP	1	KMEM
UA-05-0070		CUSTOM FINISH PAINT & PREP	1	KMEM
UA-05-0200		TWO TONE CUSTOM CAB PAINT SCHEME	1	KMEM
UA-05-0350		CUSTOM CAB BUFFING & FINISH	1	KMEM
UA-05-0360		CUSTOM CAB INTERIOR PAINT - TEXTURED GRAY	1	KMEM
UA-05-0405		CUSTOM CHASSIS JOB COLOR FRAME RAILS	1	KMEM
UA-05-0505		CUSTOM CHASSIS WHEEL AND HUB PAINT - TANDEM AXLE	1	KMEM
UA-06-0200		LADDER, PAINTING, ALL DEVICES, WHITE #91528	1	KMEM
UA-06-0450		EXTENSION CYLINDERS PAINTED TO MATCH LADDER COLOR	1	KMEM
UA-06-0905		TORQUEBOX PAINT - BLACK	1	KMEM
UA-06-1100		OUTRIGER PAINT - SILVER URETHABOND 104	1	KMEM
UA-06-1205		TURNTABLE PAINT - LADDER COLOR	1	KMEM
UA-06-1215		TURNTABLE CONSOLE PAINT - LADDER COLOR	1	KMEM
UA-06-1225		LIFT CYLINDERS CONSOLE PAINT - LADDER COLOR	1	KMEM
UA-06-1500		LADDER RUST INHIBITOR - ALL DEVICES	1	KMEM
UA-06-2120	>	PAINT CODES, TWO-TONE COLORS, FILL IN BLANKS	1	KMEM
UA-06-2130		PAINT CODES, AERIAL DEVICE - WHITE #91528	1	KMEM
UA-06-2200		PINT OF TOUCH-UP PAINT	1	KMEM
UA-06-2510		FINALIZATION & DETAILING - LADDER/PLATFORM	1	KMEM
UA-06-2850		RUSTPROOFING WARRANTY, TEN (10) YEAR	1	KMEM
		****** HEADER, LETTERING & STRIPING - 100-5-MM-PL**	**1**	**KMEM**
UA-12-0100		COMPUTER GENERATED LETTERING	1	KMEM
UA-12-1200		GOLDLEAF W/ DROP SHADOW LETTERING ON FRONT CAB DOORS	1	KMEM
UA-12-1245		3" LETTERING ON FRONT CAB DOORS	1	KMEM
UA-12-1740		GOLDLEAF W/ DROP SHADOW LETTERING ON CREW CAB DOORS	1	KMEM
UA-12-1785		3" LETTERING ON CREW CAB DOORS	1	KMEM
UA-12-2700		GOLDLEAF W/ DROP SHADOW LETTERING ON FRONT OF CAB	1	KMEM
UA-12-2745		3" LETTERING ON FRONT OF CAB	1	KMEM
UA-12-3100		GOLDLEAF W/ DROP SHADOW LETTERING ON CAB SIDE PANEL	1	KMEM
UA-12-3145		3" LETTERING ON CAB SIDE PANEL	1	KMEM
UA-12-3660		SCOTCH-LITE W/ DROP SHADOW LETTERING ON REAR BODY PANEL	1	KMEM

PART NO	S		DESCRIPTION	QTY	ID
UA-12-3750			4" LETTERING ON REAR BODY	1	KMEM
UA-13-0100			LETTERING FONT - BASIC BLOCK TYPE FONT	1	KMEM
UA-14-1310			LARGE CUSTOM FIRE DEPARTMENT LOGO	1	KMEM
UA-14-1315			SCOTCH-CAL W/ TWO COLORS - LARGE LOGO	1	KMEM
UA-14-1335		>	LOCATION - LARGE CUSTOM LOGO	1	KMEM
UA-16-1000			ACCENT STRIPING & SCROLL OPTIONS	1	KMEM
UA-20-0110			14" X 108" LETTERING PANELS ON BASE SECTION	1	KMEM
UA-20-0200			SIGN PANELS TO PAINTED TO MATCH AERIAL DEVICE COLOR	1	KMEM
UA-20-0500			SCOTCH-CAL W/O DROP SHADOW LETTERING FOR AERIAL	1	KMEM
UA-50-0200			NFPA REQUIRED SCOTCH-LITE STRIPINGSTRIPING - TA AERIAL	1	KMEM
UA-50-0220			8" SCOTCH-LITE STRIPE ON CAB AND BODY - TA AERIAL	1	KMEM
UA-58-5100			WHITE SCOTCH-LITE	1	KMEM
UA-80-6000			REAR CHEVRON STRIPING	1	KMEM
UA-80-6002			50% VERTICAL SURFACE	1	KMEM
UA-80-6030			6" REAR SCOTCH-LITE CHEVRON STRIPING	1	KMEM
UA-80-6070			RUBY RED & LEMON YELLOW SCOTCH-LITE	1	KMEM
			****** PROPOSED - AERIAL WARRANTY PKG, W/PUMP @ REAR OF SPEC**	**1**	**KMEM**
W6-00-000J			PROPOSED - KME WARRANTY, STARTING ON DELIVERY DATE	1	KMEM
W6-00-0010	**X**	<	PROPOSED - 5 YEAR FCAM WARRANTY - CUSTOM CHASSIS	1	
			$16,500 per email Phil to Byron 9-27-16		
W6-00-003M		>	PROPOSED - 5 YEAR WARRANTY - BASE WITH CUSTOM CHASSIS	1	KMEM
W6-00-0163			PROPOSED - 10 YEAR CUMMINS ISX - EXTENDED WARRANTY	1	KMEM
W6-00-0210			PROPOSED - 5 YEAR ALLISON EVS TRANSMISSION WARRANTY	1	KMEM
W6-00-0230			PROPOSED - LIFETIME FRAMERAIL WARRANTY	1	KMEM
W6-00-0242			PROPOSED - SHEPPARD STEERING GEAR STANDARD - THREE YEAR WARRANTY	1	KMEM
W6-00-0254			PROPOSED - 5 YEAR MERITOR FRONT AXLE - WARRANTY	1	KMEM
W6-00-0262			PROPOSED - 5 YEAR MERITOR 160 SERIES TANDEM AXLE REAR - WARRANTY	1	KMEM
W6-00-0320		>	PROPOSED - 10 YEAR CAB STRUCTURAL WARRANTY	1	KMEM
W6-00-0330			PROPOSED - 10 YEAR BODY STRUCTURAL WARRANTY	1	KMEM
W6-00-0390			PROPOSED - 10 YEAR CAB & BODY CORROSION WARRANTY	1	KMEM
W6-00-0450			PROPOSED - PAINT FINISH WARRANTY, TEN (10) YEAR	1	KMEM
W6-00-0470			PROPOSED - 5 YEAR LETTERING WARRANTY	1	KMEM
W6-00-0490			PROPOSED - 10 YEAR STAINLESS STEEL PIPING WARRANTY	1	KMEM
W6-00-0550			PROPOSED - REAR SUSPENSION - RIDEWELL - AIR RIDE - 3 YEAR WARRANTY	1	KMEM
W6-00-0570			PROPOSED - SAFEGUARD TECHNOLOGY - 10 YEAR - RUNG COVERS	1	KMEM
W6-00-0590			PROPOSED - 20 YEAR AERIAL LADDER WARRANTY	1	KMEM
W6-00-0640		>	PROPOSED - FIVE (5) YEAR AERIAL WATERWAY SWIVEL WARRANTY	1	KMEM
W6-00-0655		>	PROPOSED - TEN 10 YEAR AERIAL WATERWAY WARRANTY	1	KMEM
W6-00-0670			PROPOSED - AERIAL DEVICE REPAIR POLICY AND LIABILITY DISCLAIMER	1	KMEM
W6-00-0695			PRO - AERIAL DEVICE HYDRAULIC COMPONENT WARRANTIES	1	KMEM
W6-00-0710			PROPOSED - LIFETIME POLY TANK WARRANTY - ALL TANKS	1	KMEM
W6-00-0820			PROPOSED - WATEROUS 5 YEAR PUMP WARRANTY (PARTS & LABOR)	1	KMEM
W6-00-0823	**X**		WATEROUS FCAM 5 YR WARRANTY CORRECTION	1	
W6-00-1153	**S**		DEALER PROVIDES WARRANTY TRANSPORT PROP and REQ	1	DLR
W6-00-1330			PROPOSED - AKRON - 5 YEAR LIMITED WARRANTY	1	KMEM
W6-00-1340			PROPOSED - AKRON HEAVY DUTY VALVE - 10 YEAR WARRANTY	1	KMEM
W6-00-1530			PROPOSED - USSC SEATING 6 YEAR WARRANTY	1	KMEM
WA-00-0010			"AERIAL FIRE APPARATUS" NFPA 2016 STATEMENT OF EXCEPTIONS	1	KMEM

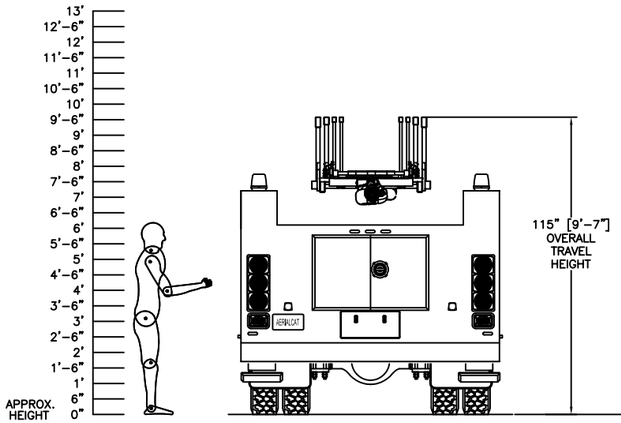

REAR VIEW

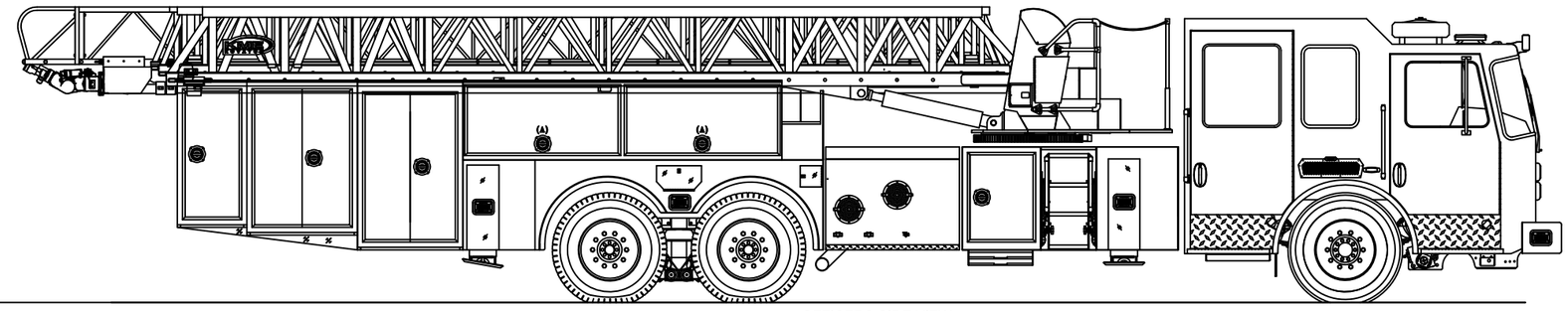

OFFICERS SIDE VIEW

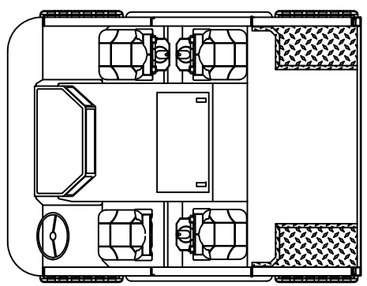

CAB INTERIOR LAYOUT

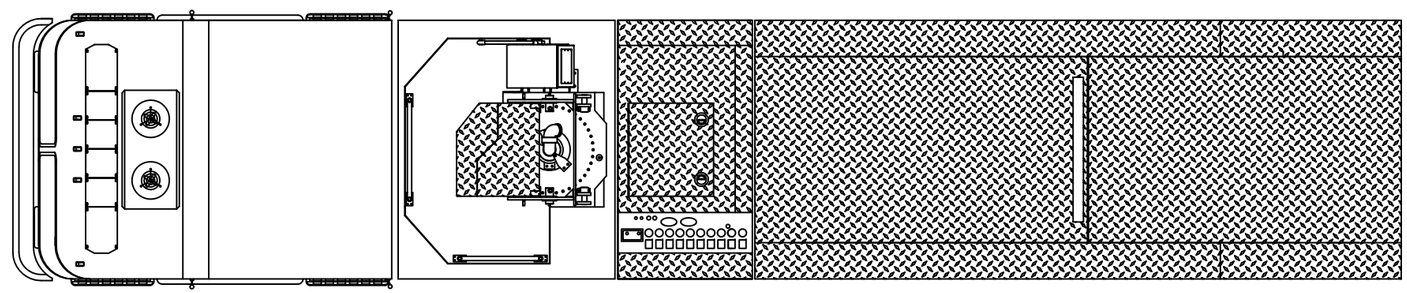

TOP VIEW

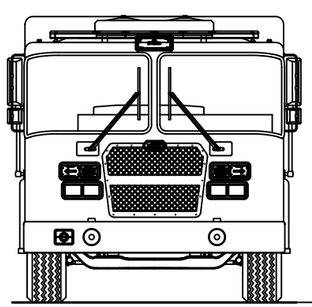

FRONT VIEW

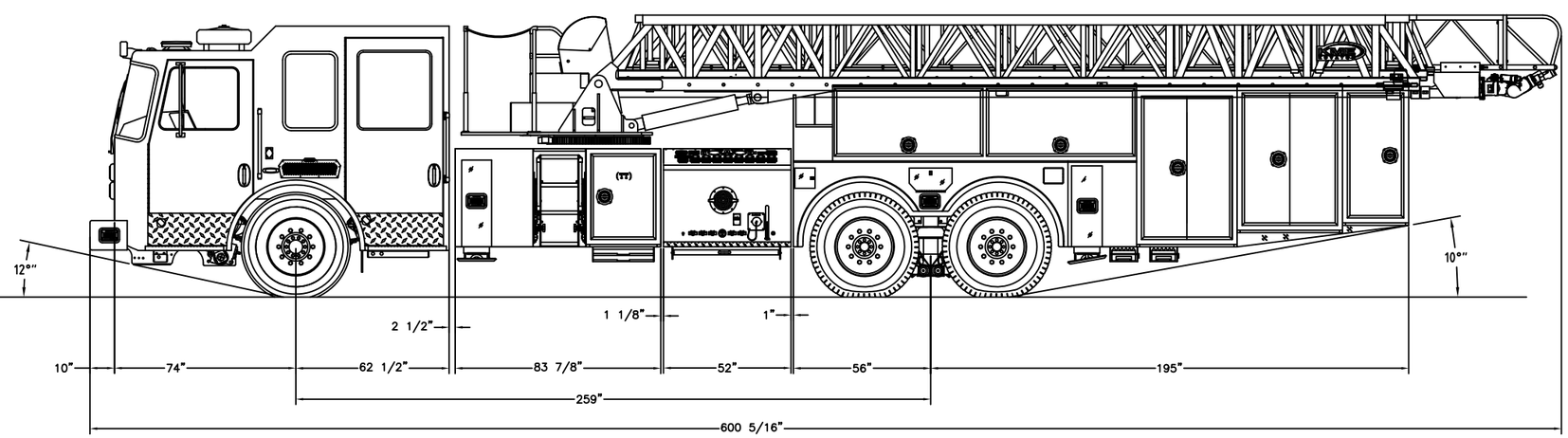

DRIVERS SIDE VIEW

CAB: 100"W PREDATOR MFD 10" RAISED ROOF
ENGINE & TRANS. CUMMINS ISX12 450 HP/ 4000 EVS
AXLES: 23,000# FRONT/58,000# REAR
PUMP: WATEROUS S100 1,75 GPM SINGLE STAGE
WATER TANK: 300 GALLONS

THIS DRAWING IS A GENERAL CONFIGURATION AND MAY NOT NECESSARILY REFLECT ALL CONTRACTUAL REQUIREMENTS. CONTRACT SPECIFICATIONS SHALL PREVAIL OVER DRAWING.

CUSTOMER APPROVAL:

NAME:

TITLE:

DATE:

SYM	DATE	REVISION DESCRIPTION	APP'D

SALES ENGINEER : TBD

DIMENSIONS ARE APPROXIMATE & MAY VARY DUE TO BUILD ADJUSTMENTS

SCALE	DWG SIZE	DRAWN BY	Z.ZSCHUNKE	DATE
NONE	B	APPROVED BY	P.HOHERCHAK	10-3-16

100' MID-MOUNT LADDER

MAPC 13 MID RANGE

PROPOSAL DRAWING

KME
ONE INDUSTRIAL COMPLEX - NESQUEHONING, PA 18240

KME

MIDDLE RANGE FCAM 100 FOOT

TRACTOR DRAWN AERIAL

LADDER

“QUINT”

MAPC 14

Quote SO

MAPC/FCAM	MAPC 14 MID RANGE 101' TRACTOR DRAWN AERIAL

Sales Rep:

Terms:

Drawing #:
Est. Delivery Date: / /
Customer PO #:
Customer #:
QPF #:

Penalty:

Quote No: 10089-0020
10/04/2016

PART NO	S	DESCRIPTION	QTY	ID
		== TRACTOR DRAWN AERIALCAT (TDA) - 713.016 07/13/16 ==	**1**	**KMEM**
		== COMPARTMENT ACCESSORIES TDA - 713.016 07/13/16 ==	**1**	**KMEM**
		== LETTERING & STRIPING, 100' TDA - 713.016 07/13/16 ==	**1**	**KMEM**
		== MISC AND LOOSE EQUIPMENT (AERIAL) - 713.016 07/13/16 ==	**1**	**KMEM**
		== AERIAL WARRANTY PACKAGE W/PUMP - 713.016 07/13/16 ==	**1**	**KMEM**
		DEALER ======= DEALER ======= DEALER	**1**	**DLR**
		QUOTE DATA VERSION: 0713.016 - 2016 DATA SET	**1**	**KMEM**
		INDEX OF PART NUMBERS	**1**	**KMEM**
		****** HEADER - CONTRACTS, PROPOSAL FORM, ETC @ FRONT OF SPECS**	**1**	**KMEM**
		****** PROPOSED - AERIAL SPEC BOILERPLATE**	**1**	**KMEM**
04-00-0000		PROPOSED - GENERAL INFORMATION - NFPA 1901	1	KMEM
04-00-0033		PROPOSED - COMPLETION INFO	1	KMEM
04-00-0040		PROPOSED - FMVSS CERTIFICATION	1	KMEM
04-00-0060		PROPOSED - RECORDS	1	KMEM
04-00-0075		PROPOSED - TOP OF THE LINE CHASSIS MULTIPLEX	1	KMEM
04-00-0107		PROPOSED - GENERAL CONSTRUCTION - AERIAL	1	KMEM
04-00-0120		PROPOSED - SINGLE LINE RESPONSIBILITY	1	KMEM
04-00-0130		PROPOSED - PRODUCT LIABILITY - $30,000,000.00	1	KMEM
04-00-0170		PROPOSED - CRITERIA & CODE CONFORMANCE - AERIAL	1	KMEM
04-00-0193		PROPOSED - PAINT PERFORMANCE CERTIFICATION	1	KMEM
04-00-0490		PROPOSED - PRICES & PAYMENTS	1	KMEM
04-00-0540		PROPOSED - BOND REQUIREMENTS	1	KMEM
04-00-0560		PROPOSED - PERFORMANCE BOND	1	KMEM
04-00-0580		PROPOSED - NON-COLLUSION AGREEMENT	1	KMEM
04-00-0630		PROPOSED - MATERIAL & WORKMANSHIP	1	KMEM
04-00-0660		PROPOSED - CONTRACT SPECIALIST	1	KMEM
04-00-0680		PROPOSED - APPROVAL DRAWING	1	KMEM
04-00-1200		PROPOSED - DELIVERY	1	KMEM
04-00-1215		PROPOSED - INSTRUCTION MANUALS, TWO (2) SETS - CD	1	KMEM
04-00-1215	**X**	POWERPOINT DELIVERY - PROPOSAL FCAM AERIAL	1	
04-00-1300		PROPOSED - VEHICLE FLUIDS PLATE	1	KMEM
04-00-1500		PROPOSED - MANUFACTURE GENERATED EXACT BLUEPRINT WITH BID	1	KMEM
04-00-1521	**X**	PROPOSED - KME and BULLDOG FAMA MEMBERSHIP	1	

PART NO	S	DESCRIPTION	QTY	ID
04-00-1540		PROPOSED - MANUFACTURED IN THE UNITED STATES	1	KMEM
04-00-1550		PROPOSED - ISO 9001 QUALITY MANAGEMENT SYSTEM	1	KMEM
04-00-1570		PROPOSED - NFPA TREAD PLATE CERTIFICATION	1	KMEM
04-00-2440		PROPOSED - UNDERWRITERS LABORATORIES (UL) TESTING - AERIAL	1	KMEM
07-00-0015		"AERIAL FIRE APPARATUS" NFPA 2016 CHAPTERS OF COMPLIANCE	1	KMEM
08-00-0000		VEHICLE DATA PLATE DESCRIPTION	1	KMEM
14-00-0000		NFPA ROLLOVER STABILITY GENERAL STATEMENT	1	KMEM
15-00-0010	>	PROPOSED - PRINCIPAL APPARATUS DIMENSIONS & GVWR	1	KMEM
15-00-0050		!!! CRITICAL OVERALL HEIGHT REQUIREMENT !!! - "NO"	1	KMEM
15-00-0150		!!! CRITICAL OVERALL LENGTH REQUIREMENT !!! - "NO"	1	KMEM
AA-00-002A		SERVICE CENTER - PROPOSAL FCAM	1	DLR
BA-00-0355		TILLERS	1	KMEM
BA-00-3000		SEAT AND SEAT BELT ANCHOR TESTING	1	KMEM
BA-01-2010		<1> 101' TILLER WITH PUMP	1	KMEM
BA-01-2105		<2> CHASSIS, SINGLE AXLE TILLER	1	KMEM
BA-02-0815		<3> TDA PREDATOR - SINGLE AXLE	1	KMEM
		****** HEADER - 100" PREDATOR CAB ******	**1**	**KMEM**
BA-04-0805		PREDATOR CAB - BASE, 100"	1	KMEM
BA-04-0850		PREDATOR CAB - BASE - ALUMINUM CONSTRUCTION	1	KMEM
BA-04-0990		PREDATOR 100" - CRASH TESTING	1	KMEM
BA-04-0995		PREDATOR 100" - 120,000# ROOF & SIDE TESTING	1	KMEM
BA-04-1300		PREDATOR 100" - MFD CAB LENGTH (DIM - 62 1/2")	1	KMEM
BA-04-1900		PREDATOR 100" - VISTA DIMENSIONS FRONT SEATING & ENGINE ENCLOSURE	1	KMEM
BA-04-4000		10" RAISED ROOF - 100" PREDATOR	1	KMEM
BA-04-5000		CAB ROOF DRIP RAIL 100" PREDATOR/PANTHER	1	KMEM
BA-05-0265		BATTERY ACCESS DOOR - REAR STEP WELL, DRIVER SIDE	1	KMEM
BA-05-0610		BARRIER HEIGHT CAB DOORS, 100" PREDATOR "MFD, LFD & X-LFD"	1	KMEM
BA-05-0650		CAST ANTI-SLIP ENTRY STEPS FOR REDUCED LENGTH CAB DOORS	1	KMEM
BA-05-0700		CAB DOORS - BOLT ON WEATHER STRIP	1	KMEM
BA-05-1015		PREDATOR DOOR LATCHES, HD LOOP STYLE LATCH - BARRIER HEIGHT DOORS	1	KMEM
BA-05-1035		LOCKING CAB DOOR , OUT + IN, LOOP STYLE LATCH	1	KMEM
BA-05-1037		KEY MODEL #2001	1	KMEM
BA-05-1103		WINDOWS, MANUAL HAND CRANK STYLE - 100"	1	KMEM
BA-05-1130		DOOR WINDOW TRIM EXTRUSION, 4 - DOOR	1	KMEM
BA-05-1310		UPPER INTERIOR DOOR PANELS - ABS, 4-DOOR	1	KMEM
BA-05-1410		BRUSHED ALUMINUM DOOR SCUFF PLATES, 4 - DOOR	1	KMEM
BA-05-1510		SCOTCHLITE MATERIAL ON INTERIOR OF DOOR PANEL 4-DOORS	1	KMEM
		****** HEADER - CAB EXTERIOR ACCESSORIES & OPT, 100" PREDATOR**	**1**	**KMEM**
BA-05-2410		WINDSHIELD, 100" PREDATOR CAB	1	KMEM
BA-05-2425		WINDSHIELD WIPERS & WASHERS - 100" PREDATOR	1	KMEM
BA-05-2450		SIDE VIEWING WINDOWS NON-SLIDING - PREDATOR	1	KMEM
BA-05-2500		DARK TINT WINDOWS, SIDE VIEWING, REAR DOORS & REAR WALL	1	KMEM
BA-05-2600		GRAB RAILS EXTERIOR, KNURLED ALUMINUM EXTRUSION	1	KMEM
BA-05-2668		PREDATOR INTERIOR GRAB HANDLES - WHEELABRATED	1	KMEM
BA-05-2692		INTERIOR "A" POST GRAB HANDLE "PREDATOR" - WHEELABRATED	1	KMEM
BA-05-2725		FRONT CAB GRILLE - SHAPED PERFORATED POLISHED STAINLESS, 100" PRED, SS, PANTHER	1	KMEM
BA-05-2825		SIDE CAB GRILLES -SHAPED SHAPED PERFORATED POLISHED STAINLESS, 100" PRED, SS, PA	1	KMEM
BA-05-2900		ALUMINUM CAB WHEEL LINERS	1	KMEM
BA-05-2910		ALUMINUM CAB FENDERETTES	1	KMEM
BA-05-3000		FRONT MUD FLAPS	1	KMEM
BA-05-3500		VELVAC MIRRORS " WEST COAST" HEATED / REMOTE - W/CONVEX SPOT	1	KMEM
BA-05-3690		MIRROR CONTROL IN MULTIPLEX CONTROL SCREEN	1	KMEM
BA-05-5115		INTERIOR TRIM, 100" PREDATOR	1	KMEM
BA-05-5180		CUSTOM CAB INTERIOR PAINT - TEXTURED GRAY	1	KMEM
BA-05-5200		PREDATOR REAR INTERIOR CAB WALL, GRAY DURAWEAR UPHOLSTERY	1	KMEM
BA-05-5335		TREAD PLATE KICK PLATE ON LOWER INTERIOR REAR WALL	1	KMEM

PART NO	S	DESCRIPTION	QTY	ID
BA-05-5530	>	STORAGE COMPARTMENTS UNDER FRONT SEATS - 100" PREDATOR	1	KMEM
BA-05-5610		BARYFOL FLOORING	1	KMEM
BA-05-5650		1" ACOUSTICAL INSULATION	1	KMEM
BA-05-5824		ENGINE ENCLOSURE 100" PREDATOR FAB DASH (DURAWEAR)	1	KMEM
BA-05-5860		ENGINE ENCLOSURE MATERIAL - ALUMINUM CAB	1	KMEM
BA-05-7040		SUN VISORS, 100" PREDATOR CAB, PADDED VINYL	1	KMEM
BA-06-0400	>	DELETED - TOP ROLLOVER PROTECTION SYSTEM	1	KMEM
		****** HEADER - CAB SEATING & ACCESSORIES, 100" - PREDATOR MFD**	**1**	**KMEM**
		****** SEATING OPTIONS USSC, 100" - PREDATOR - MFD - NON ROLLTEK**	**1**	**KMEM**
BA-06-329H		DRIVERS SEAT, USSC AIR SUSPENSION, ABTS	1	KMEM
BA-06-389K		OFFICERS SEAT, USSC - FIXED BASE, SCBA, ABTS	1	KMEM
BA-06-3910		ZICO ULLH SCBA BOTTLE BRACKET - OFFICER'S SEAT	1	KMEM
		MFD CAB - REAR FACING USSC SEATS - NON ROLLTEK	**1**	**KMEM**
BA-06-414H		USSC SCBA ABTS REAR FACING, OUTBOARD, DS	1	KMEM
BA-06-4180		ZICO ULLH SCBA BOTTLE BRACKET - OUTBOARD, DS	1	KMEM
BA-06-424H		USSC SCBA ABTS REAR FACING, OUTBOARD, OS	1	KMEM
BA-06-4280		ZICO ULLH SCBA BOTTLE BRACKET - OUTBOARD, OS	1	KMEM
		MFD CAB - FORWARD FACING USSC SEATS - NON ROLLTEK	**1**	**KMEM**
BA-06-7200		**** DELETE FORWARD FACING SEAT RISER - NOT REQUIRED	1	KMEM
BA-06-8055		NO SCBA PARADE COVERS SUPPLIED	1	KMEM
BA-06-8150		USSC SEATING MATERIAL - BLACK CORDURA	1	KMEM
		****** HEADER - VEHICLE DATA RECORDER SYSTEMS**	**1**	**KMEM**
BA-06-9103	>	CLASS ONE SEAT BELT WARNING SYSTEM - UP TO 6 POSITIONS - ULTRAVIEW DISP	1	KMEM
BA-06-9120		FIVE (5) SEATING POSITIONS	1	KMEM
BA-06-9250	>	HELMET HOLDERS - IN CAB - ZICO	5	KMEM
BA-06-9310		CLASS ONE VEHICLE DATA RECORDER - MULTIPLEX	1	KMEM
		****** HEADER - CAB INTERIOR ACCESSORIES & OPTIONS, 100" PREDATOR**	**1**	**KMEM**
		****** HEADER - INSTRUMENTATION & CONTROLS, 100" PREDATOR - NARROW VISTA**	**1**	**KMEM**
BA-08-0214		DASH & CENTER CONSOLE - 100" PREDATOR FAB DASH (UPHOLSTERED)	1	KMEM
BA-08-0275		INSTRUMENT PANEL, 100" PREDATOR - NARROW	1	KMEM
BA-08-0315		DIESEL EXHAUST FLUID LEVEL GAUGE	1	KMEM
BA-08-0320		ENGINE COMPRESSION BRAKE CONTROLS	1	KMEM
BA-08-0620		ULTRAVIEW 450 DISPLAY ON CAB DASH FOR ES-KEY SYSTEM	1	KMEM
BA-08-1220		INDICATOR CLUSTER, 100" PREDATOR	1	KMEM
BA-08-1265		"OUTRIGGERS NOT STOWED" INDICATOR ON DASH	1	KMEM
BA-08-1800		LOWER RIGHT AUXILIARY SWITCH PANEL - PREDATOR - FAB	1	KMEM
BA-08-1900		PUMP SHIFT CONTROL ON LOWER LEFT DASH PANEL	1	KMEM
BA-08-1950		MULTIPLEX CONTROL PUMP SHIFT SWITCH - MULTIPLEX	1	KMEM
BA-08-2005		AERIAL LADDER, LADDER POWER SWITCHES CAB (TDA)	1	KMEM
BA-08-2750		PREDATOR COMPUTER TERMINAL IN FRONT OF OFFICER (FABRICATED)	1	KMEM
BA-08-2905		OVERHEAD ABS PANEL, FLAT FACED, 100" PREDATOR	1	KMEM
BA-08-3105		HEATER/DEFROSTER & ACCESS, PREDATOR 100" - 10" RAISED ROOF	1	KMEM
BA-08-6900		HVAC CONTROL SYSTEM - INCOPORATED INTO MULTIPLEX CONTROL DISPLAY	1	KMEM
BA-08-9000		CAB TILT SYSTEM & OPTIONS	1	KMEM
BA-08-9010	>	AUXILIARY - MANUAL CAB LIFT BACKUP SYSTEM	1	KMEM
BA-08-9110		PARKING BRAKE/CAB TILT INTERLOCK	1	KMEM
		FRAME & AXLE PACKAGE, TILLER SINGLE AXLE CHASSIS	**1**	**KMEM**
BA-09-5000	>	110,000 PSI FRAME: SINGLE MAIN RAIL	1	KMEM
		HEADER - FRONT BUMPER, EXTENSIONS & ACCESSORIES	**1**	**KMEM**
BA-10-0057	>	BUMPER 12" PAINTED 3/8" STEEL BUMPER - ALL CABS	1	KMEM
BA-10-0100	>	6" FRONT BUMPER EXTENSION WITH TREAD PLATE GRAVEL SHIELD	1	KMEM
BA-10-0405		TREADPLATE GRAVEL SHIELD STANDARD INSTALLATION	1	KMEM
BA-10-2010		TWO (2) PAINTED TOW HOOKS BELOW FRONT BUMPER	1	KMEM
BA-14-0150		21,500# FRONT AXLE MERITOR MFS-20-133A-N	1	KMEM
BA-14-1110		MERITOR, EX-225 17" DISC BRAKES, FRONT AXLE, W/ AUTO SLACK ADJUSTMENT	1	KMEM
BA-14-2030		SUSPENSION FRONT - 21,500# RATING	1	KMEM

PART NO	S	DESCRIPTION	QTY	ID
BA-14-2110		FRONT AXLE SHOCK ABSORBERS - MONROE "MAGNUM - 70"	1	KMEM
BA-14-5140		31,000# REAR AXLE MERITOR RS-30-185	1	KMEM
BA-14-6515		16.5" X 8.6" S-CAM BRAKES - MERITOR REAR AXLE, W/ AUTO SLACK	1	KMEM
BA-15-2810		VEHICLE TOP SPEED - 2016 NFPA STATEMENT	1	KMEM
BA-15-4820	>	HENDRICKSON FIREMAAX, FMX-312 AIR RIDE- SA 31,000#	1	KMEM
		****** HEADER - BRAKE SYSTEM, SINGLE AXLE VEHICLE**	**1**	**KMEM**
BA-20-1000		BRAKE SYSTEM, SA CHASSIS	1	KMEM
BA-20-1100		ABS BRAKING FOR SINGLE REAR AXLE CHASSIS	1	KMEM
BA-20-1500		AIR RESERVOIRS 4700 CU IN SA, BASE	1	KMEM
BA-20-2025		1/4 TURN DRAIN VALVES ON ALL AIR TANKS	1	KMEM
BA-20-3010		ROCKWELL/WABCO SYSTEM SAVER #1200, AIR DRYER HEATED	1	KMEM
BA-20-5000		COLOR CODED SYNFLEX BRAKE LINES W/QUICK RELEASE FITTINGS - SA	1	KMEM
BA-20-5500		AIR COMPRESSOR -WABCO 18.7 CFM- STD. FOR ALL CUMMINS ENGINES	1	KMEM
BA-20-5810		BRAKE TREADLE VALVE	1	KMEM
BA-20-6010		PARKING BRAKE CONTROL - NEAR DRIVER - ALL WHEEL LOCK	1	KMEM
		HEADER, TIRE AND WHEEL OPTIONS	**1**	**KMEM**
		HEADER, WHEELS, 21,500 FRONT AXLE - STEEL - 22.5 X 12.25	**1**	**KMEM**
BA-25-1005		FRONT WHEELS, STEEL DISC TYPE, 22.5 X 12.25, 22,500#	1	KMEM
BA-25-1015		FRONT WHEELS, LUG AND HUB TRIM (STEEL WHEELS)	1	KMEM
BA-25-2030	>	FRONT, GOODYEAR 425/65R22.5 L 24,400# G296 MSA MIXED - 68MPH	1	KMEM
BA-25-2400		GOODYEAR - FIRE SERVICE RATING - TIRE RESTRICTIONS	1	KMEM
		HEADER, TIRES & WHEELS, 31,000 SINGLE REAR AXLE	**1**	**KMEM**
BA-25-5010	>	REAR WHEELS, STEEL DISC TYPE, 22.5 X 9, SA	1	KMEM
BA-25-5035		REAR WHEELS, LUG AND HUB TRIM, SA (STEEL)	1	KMEM
BA-25-6085	>	REAR, GDYR 315/80R22.5 J 32,000# RHD II+ TRACTION - 75, SA	1	KMEM
BA-25-7400		GOODYEAR - FIRE SERVICE RATING - TIRE RESTRICTIONS	1	KMEM
BA-25-9900		TIRE PRESSURE MONITORING - LED VALVE STEM CAPS - SIX TIRES	1	KMEM
BA-26-5000		**** TIRE PRESSURE SYSTEMS MUST MATCH ON CHASSIS AND TRAILER ****	1	KMEM
		100" PREDATOR - ENGINE PACKAGE, TILLER SINGLE AXLE CHASSIS	**1**	**KMEM**
		****** 100" - HEADER, ENGINE & ENGINE COMPONENTS**	**1**	**KMEM**
BA-30-3200	>	CUMMINS ISX12 - 500 HP @ 1800 RPM TQ 1645 lb-ft @ 1100 - PREDATOR NARROW	1	KMEM
BA-30-9810		PROPOSED - ENGINE CERTIFICATION CUSTOM CHASSIS	1	KMEM
BA-32-0035		COOLING/RADIATOR, 100" PREDATOR - NARROW	1	KMEM
BA-32-0070		ENGINE COOLANT FILTER - CUMMINS ISC - ISX	1	KMEM
BA-32-0085		COOLING SYSTEM CRITERIA	1	KMEM
BA-32-0100		TRANSMISSION COOLER	1	KMEM
BA-32-0120		RADIATOR SKID PLATE	1	KMEM
BA-32-0160		CHARGED AIR COOLER (FRONT MOUNT)	1	KMEM
BA-32-0245		COOLANT FAN, W/CLUTCH - CUMMINS ISX12	1	KMEM
BA-32-0340		HEATER AND COOLANT HOSES/PIPING	1	KMEM
BA-32-0420		LOW COOLANT INDICATOR LIGHT AND ALARM IN CAB	1	KMEM
BA-33-0020	>	SECONDARY BRAKING - ENGINE COMPRESSION BRAKE	1	KMEM
BA-33-0150		FAST IDLE CONTROL FOR ALL ELECTRONIC ENGINES - SMART WHEEL	1	KMEM
BA-33-0160		ENGINE AIR CLEANER	1	KMEM
BA-33-0180		SPARK ARRESTOR	1	KMEM
BA-33-0200		ACCELERATOR PEDAL - FLOOR MOUNT	1	KMEM
BA-33-0250		REMOTE THROTTLE & INTERLOCK HARNESS	1	KMEM
BA-40-0300		ALLISON 4000EVS TRANS. - COMPRESSION BRAKE	1	KMEM
BA-40-0660		FIVE (5) SPEED AUTOMATIC TRANSMISSION - 4000 SERIES	1	KMEM
BA-40-0700		ALLISON TRANSMISSIONS, ELECTRONIC TOUCH PAD SHIFTER IN CAB	1	KMEM
BA-40-0855		TRANSMISSION OIL LEVEL SENSOR	1	KMEM
BA-40-0860		ALLISON PARK TO NEUTRAL	1	KMEM
BA-40-0910		ALLISON PRESELECT PROGRAMMING	1	KMEM
BA-40-0920		PRESELECT PROGRAMMED FOR 4TH GEAR	1	KMEM
BA-40-4720		TES-389 TRANS FLUID 4000EVS TRANSMISSION	1	KMEM
BA-45-0110		DRIVE LINES DANA-SPICER #1810 SERIES	1	KMEM
BA-49-0100		DIESEL EXHAUST FLUID TANK - 5 GALLON	1	KMEM
BA-50-0110		EXHAUST SYSTEM - DPF & SCR SYSTEM - INLINE SYSTEM	1	KMEM

PART NO	S	DESCRIPTION	QTY	ID
BA-50-0155		ALUMINIZED STEEL EXHAUST TAILPIPE/OUTLET OS - DPF + SCR SYSTEM	1	KMEM
BA-50-2500		FUEL SYSTEM	1	KMEM
BA-50-2505		FUEL TANK - 50 GALLON, STEEL	1	KMEM
BA-50-2625		FUEL LINES - FIBER REINFORCED HOSE	1	KMEM
BA-50-2645	>	CUMMINS FUEL-WATER SEPARATOR	1	KMEM
BA-50-2670		FUEL PUMP SECONDARY ELECTRIC, REQ. ON 210" W-B OR LONGER	1	KMEM
BA-50-2700		FUEL POCKET, LEFT SIDE REAR WHEEL WELL PANEL	1	KMEM
BA-50-5050	>	STEERING - DUAL SHEPPARD POWER STEERING GEARS	1	KMEM
BA-50-5150	>	SECONDARY POWER STEERING PUMP FOR TRAILER STEERING - ISX ENGINE ONLY	1	KMEM
BA-50-7115		STEERING COLUMN - CLOCK SPRING "NARROW"	1	KMEM
BA-50-7155		18" STEERING WHEEL - 4 SPOKE - "NARROW"	1	KMEM
BA-50-7170		SMART WHEEL CONTROLS ON STEERING WHEEL	1	KMEM
BA-50-9000		ROAD SAFETY KITS	1	KMEM
		****** HEADER, TILLER CHASSIS ELECTRICAL, 100" PREDATOR (OPTIONS)**	**1**	**KMEM**
		****** HEADER, TILLER W/ PUMP BODY ELECTRICAL (OPTIONS)**	**1**	**KMEM**
BE-01-0005		PREDATOR CHASSIS ELECTRICAL SYSTEM DESCRIPTION	1	KMEM
BE-01-0105		PREDATOR CHASSIS WIRING INSTALLATION	1	KMEM
BE-01-0150		DIRECT BATTERY GROUNDING STRAP - PREDATOR	1	KMEM
BE-01-0153		EMI/RFI PROTECTION	1	KMEM
BE-01-0205		PREDATOR 12 VOLT ELECTRICAL SYSTEM TESTING	1	KMEM
BE-05-0353		CLASS-1 ES-KEY MULTI-PLEXED ELECTRICAL SYSTEM 100" PREDATOR	1	KMEM
BE-05-0450		CLASS-1 ES-KEY ULTRAVIEW 450 DISPLAY	1	KMEM
BE-05-0800		INTER-LOCK MODULE FOR MULTIPLEX SYSTEM	1	KMEM
BE-05-0900		CHASSIS DIAGNOSTICS SYSTEM	1	KMEM
BE-05-1160		VOLTAGE MONITORING SYSTEM - 12 VOLT	1	KMEM
BE-05-1165		INDICATOR LIGHT AND ALARM PROVE-OUT SYSTEM	1	KMEM
BE-05-1170		SEQUENCER	1	KMEM
BE-05-1175		ELECTRICAL HARNESS INSTALLATION - 12 VOLT	1	KMEM
BE-10-0420		LEECE NEVILLE 320 AMP 4962PA - ALTERNATOR	1	KMEM
BE-15-0733		BATTERIES - SIX (6) EXIDE GROUP 31, 1000CCA	1	KMEM
BE-15-1105		PREDATOR BATTERY STORAGE, STEEL, MFD, XMFD, LFD, XLFD	1	KMEM
BE-15-1500		BATTERY DISCONNECT SWITCH, ALL UNITS	1	KMEM
BE-15-1555		COLE HERSEE BATTERY JUMPER STUDS, DS BATTERY BOX	1	KMEM
BE-20-1615		120 VOLT RECEPTACLE FOR ON-BOARD BATT. CHARGER - CUSTOM	1	KMEM
BE-20-1715		SHORELINE RECEPTACLE LABEL - NFPA	1	KMEM
BE-20-1750		SHORELINE LOCATION - ADJACENT TO DRIVER'S DOOR	1	KMEM
BE-20-2000		KUSSMAUL MODEL 1200, 40AMP, BATTERY CHARGER	1	KMEM
BE-30-0100		CONTROL SWITCHING - EATON MULTIPLEX SWITCHES - 12 ABOVE DRIVER	1	KMEM
BE-30-0120		CONTROL SWITCHING - EATON MULTIPLEX SWITCHES - 9 LOWER PANEL	1	KMEM
BE-30-2500		CONTROL SWITCHING LABELING	1	KMEM
BF-00-0515		WELDON #8080-8000-13 WHITE/RED LED INTERIOR LIGHTS (4)	1	KMEM
BF-00-5000		DOOR OPEN INDICATOR W/ INTEGRAL AUDIBLE ALARM	1	KMEM
		****** HEADER, 12V POWER/ USB CHARGING/ POWER - GROUND CIRCUITS, CUSTOM ******	**1**	**KMEM**
BF-01-1020	>	12 VOLT POWER PORT LOCATED IN CAB AS DIRECTED	1	KMEM
BF-01-4200	>	KUSSMAUL USB CHARGING PORT LOCATED IN CAB AS DIRECTED	1	KMEM
BF-01-6000		12 VOLT POWER AND GROUND CIRCUIT FOR ACCESSORIES IN DASH	1	KMEM
		****** HEADER, REAR/SIDE VISION CAMERA SYSTEMS ******	**1**	**KMEM**
BF-20-0000		DUAL HEADLIGHTS, HALOGEN, PREDATOR - DUAL BEZELS	1	KMEM
BF-20-0320		DAYTIME RUNNING LIGHTS, ALL CABS	1	KMEM
BG-00-0055		DUAL MODULE w/ CODE 3 65STA LED TURN SIGNAL & REQ WARN LIGHT	1	KMEM
BG-00-0460		CUST TILLER CHASSIS LED MARKER LIGHTS	1	KMEM
BG-00-0560		CUST TILLER BODY LED MARKER LIGHTS	1	KMEM
BG-00-1200		WHELEN LED MARKER LIGHTS @ TOP FRONT ROOF EDGE OF CAB	1	KMEM
BG-00-1620		TRUCK-LITE MARKER/TURN LIGHTS @ EA SIDE OF BODY - TDA	1	KMEM
BG-00-1660		TRUCK-LITE MARKER LIGHTS @ REAR OF BODY	1	KMEM
BG-00-1800		TRUCK-LITE DOT AMBER REFLECTORS @ SIDE OF BODY	1	KMEM
BG-00-1810		TRUCK-LITE DOT RED REFLECTORS @ REAR OF BODY	1	KMEM
BG-00-2915		TECNIQ #L10 LED LICENSE PLATE LIGHT @ DS REAR OF BODY	1	KMEM

PART NO	S	DESCRIPTION	QTY	ID
BG-02-2533		CODE 3, 7X9 - ALL IN ONE - LED BRAKE, REVERSE, & TURN	1	KMEM
BH-04-1050		CAB STEP LIGHTS, TECNIQ EON 3 LED, ALL DEVICES	4	KMEM
BH-04-1130		BODY STEP LIGHTS, TECNIQ EON 3 LED, ALL DEVICES	4	KMEM
		****** HEADER, SCENE LIGHTS - MM / TDA**	**1**	**KMEM**
		****** HEADER, SCENE LIGHTS - LADDER/PLATFORM W/ PUMP**	**1**	**KMEM**
BH-11-0500		NFPA (4) JW SPEAKER LED RECTANGLE GROUND LIGHTS, BELOW CAB DOORS	1	KMEM
BH-11-0560		GROUND LIGHTS, 2 LED BELOW PUMP PANEL RUNNING BOARD - RH	1	KMEM
BH-11-0585		GROUND LIGHTS, 2 LED, AT REAR BODY CORNERS - RH	1	KMEM
		****** HEADER, BROW AND CAB RADIUS LIGHTS - CUSTOM CHASSIS**	**1**	**KMEM**
		****** HEADER, TELESCOPING LIGHTS, REAR OF CAB - CUSTOM CHASSIS**	**1**	**KMEM**
BI-00-0200		AERIAL BODY ELECTRICAL SYSTEM	1	KMEM
BI-00-0205		AERIAL BODY ELECTRICAL JUNCTION COMPARTMENT	1	KMEM
BI-00-0220		TILLERS, AERIAL DEVICE ELECTRICAL JUNCTION COMPARTMENT	1	KMEM
BI-00-0525		BODY ELECTRICAL HARNESS - ES-KEY	1	KMEM
BJ-00-5115		PUMP ENCLOSURE WORK LIGHTS - TECNIQ LED	1	KMEM
BJ-00-5165		ENGINE COMPARTMENT WORK LIGHTS - TECNIQ LED	1	KMEM
BJ-00-7110		TRACTOR ALIGNMENT LIGHT ON TRACTOR CAB ROOF HELLA MARINE NAVILED®360	1	KMEM
		COMPARTMENT LIGHTS - TDA	**1**	**KMEM**
BJ-02-1055	>	COMPT. LIGHTS, TECNIQ E18 LED	17	KMEM
		****** CUSTOM TDA NFPA WARNING LIGHT PACKAGE**	**1**	**KMEM**
BL-95-0000		NFPA COMPLIANT WARNING LIGHT PACKAGE - ALL UNITS	1	KMEM
BL-95-0100		LIGHT PACKAGE ACTUATION/CONTROLS - ALL UNITS	1	KMEM
BL-98-0000		WARNING LIGHT FLASH PATTERN - NFPA FLASH PATTERN	1	KMEM
BM-00-0206		CODE 3 UPPER PACKAGE - CUSTOM TDA	1	KMEM
BM-02-0086	>	A-UPPER, CODE 3 LED 2780NFPA P1, RX 2700 80" PRIZM II BAR	1	KMEM
BM-02-1000		C-UPPER, CODE 3 HALOGEN 550 BEACONS, RED DRIVER, AMBER OFFICER	1	KMEM
BM-02-2000		B/D-UPPER REAR, COVERED BY LIGHTS IN ZONE C-UPPER	1	KMEM
BM-02-3000		B/D-UPPER FRONT, COVERED BY LIGHTS IN ZONE A-UPPER	1	KMEM
BM-07-0206		CODE 3 LOWER PACKAGE - CUSTOM TDA	1	KMEM
BM-09-0018	>	A-LOWER FRONT, CODE 3 65 SERIES LED	1	KMEM
BM-09-0098		A-LOWER FRONT MOUNTING, CUSTOM CHASSIS	1	KMEM
BM-09-1014	>	C-LOWER REAR, CODE 3 65 SERIES LED	1	KMEM
BM-09-2006	>	B/D-LOWER FRONT, CODE 3 65 SERIES LED	1	KMEM
BM-09-2098		B/D-LOWER FRONT MOUNTING, CUSTOM CHASSIS	1	KMEM
BM-09-3006	>	B/D-LOWER MID, CODE 3 65 SERIES LED	1	KMEM
BM-09-3506	>	B/D-LOWER SECONDARY MID, CODE 3 65 SERIES LED	1	KMEM
BM-09-4006	>	B/D-LOWER REAR, CODE 3 65 SERIES LED	1	KMEM
BM-15-0000		LIGHT PACKAGE NFPA CERTIFICATION - ALL UNITS	1	KMEM
		****** HEADER, OPTIONAL WARNING LIGHTS**	**1**	**KMEM**
		****** HEADER, AUDIBLE WARNING & COMMUNICATION EQUIPMENT**	**1**	**KMEM**
BW-00-0510		CHASSIS SINGLE ELECTRIC (DOT) HORN	1	KMEM
BW-00-0560		CODE 3, #CA278, BACK-UP ALARM - 87DBA	1	KMEM
BW-00-5000	>	DUAL CHROME AIR HORNS	1	KMEM
BW-00-5100		DUAL AIR HORNS RECESSED IN FRONT BUMPER, STD	1	KMEM
BW-00-5200		AIR HORN CTRL - FOOT FOR OFFICER & STEERING WHEEL FOR DRIVER	1	KMEM
BW-01-0120		SIREN, WHELEN # 295HFS2, 100W - FLUSH MOUNT	1	KMEM
BW-01-1020		ONE (1) WHELEN SA315P SPEAKER	1	KMEM
		****** HEADER, PUMP, TANK & ACCESSORIES, 100' & 101' TILLER**	**1**	**KMEM**
		BASE PUMP, ALL TILLERS	**1**	**KMEM**
DC-00-2365		WATEROUS S100, 1750 GPM SINGLE STAGE PUMP - MID MOUNT	1	KMEM
DC-01-4630		WATEROUS S100 MECHANICAL PUMP SEAL	1	KMEM
DC-01-6211		WATEROUS "C20" DRIVE UNIT, WATEROUS MID-MOUNT (FRONT DRIVE)	1	KMEM
DC-01-6490		PUMP RATIO (HALE, WATEROUS OR DARLEY)	1	KMEM
DC-01-7140		WATEROUS AIR SHIFT	1	KMEM
DC-01-8590		PUMP SHIFT MANUAL OVERRIDE (HALE, WATEROUS OR DARLEY)	1	KMEM
DC-01-8615		WATEROUS PUMP SHIFT INDICATOR LIGHTS	1	KMEM
DC-01-9020		TRANSMISSION LOCK-UP (HALE, WATEROUS OR DARLEY)	1	KMEM
DC-02-1900		PUMP MOUNTS - MID-SHIP PUMPS	1	KMEM

PART NO	S	DESCRIPTION	QTY	ID
DC-02-1990		PUMP INSTALLATION - CUSTOM	1	KMEM
DC-04-0120		MANIFOLD - DISCHARGE & SUCTION FOR 1250-2000 GPM INTERFACE PUMPING SYSTEM	1	KMEM
		****** HEADER, WATEROUS S100, PRESSURE CONTROL - MID MOUNT**	**1**	**KMEM**
DC-05-1225		FIRE RESEARCH "IN CONTROL" TGA-300 PRESSURE GOVERNOR	1	KMEM
DC-05-1295		TASK FORCE TIPS #A18 SERIES INTAKE RELIEF VALVE	1	KMEM
DC-05-2500		PUMP UL CERTIFICATION - 750 GPM & UP	1	KMEM
		WATEROUS, PUMP PRIMING PUMP AND CONTROLS	**1**	**KMEM**
DC-05-3680	>	TRIDENT "MANUAL" AIR PRIMING SYSTEM	1	KMEM
		WATEROUS, DRAINS & ACCESSORES	**1**	**KMEM**
DC-05-5110		ROTARY MASTER DRAIN VALVE	1	KMEM
DC-05-5400		DRAINS/BLEEDER "INNOVATIVE CONTROLS" LIFT UP @ ALL 1-1/2" OR LARGER	1	KMEM
DC-05-5500		SYNFLEX SUCTION, DISCHARGE, PRESSURE AND CONTROL LINES	1	KMEM
DC-05-6220		WATEROUS ANODE BLOCKS - 2 TOTAL	1	KMEM
DC-10-2025		SIDE MOUNT PUMP MODULE, TILLER AERIAL	1	KMEM
DC-10-2500		PUMP MODULE - STEEL CONSTRUCTION	1	KMEM
		****** HEADER, SUCTIONS - TDA, SIDE MOUNT**	**1**	**KMEM**
DC-14-3340		WATEROUS MAIN SUCTION INLETS 6" NST, 1750 GPM S100 PUMP	1	KMEM
DC-14-5560	>	6" NST MAIN PUMP SUCTION PRESSURE VENTED CAPS (2)	1	KMEM
		HEADER - AUXILIARY SUCTION/S - AERIALS	**1**	**KMEM**
DC-20-1000		2 1/2" AUX. SIDE SUCTION @ DS PANEL TO REAR OF MAIN INLET	1	KMEM
DC-20-1100		2 1/2" AKRON #8800 S.S. BALL VALVE, DS REAR AUX SUCTION	1	KMEM
DC-20-1200		SWING CONTROL @ VALVE, DS REAR AUX SUCTION	1	KMEM
DC-20-9500		BEHIND PANEL MOUNT	1	KMEM
		****** HEADER - TANK TO PUMP - TILLERS**	**1**	**KMEM**
DC-25-1200		TANK TO PUMP - 3" VALVE - LADDERS & PLATFORMS	1	KMEM
DC-25-3110		3" AKRON #8800 SERIES - S.S. BALL, VALVE , TANK TO PUMP	1	KMEM
DC-25-5110		3" PUSH/PULL CONTROL FOR TANK TO PUMP	1	KMEM
		****** HEADER - TANK FILL - TILLERS**	**1**	**KMEM**
DC-30-2100		TANK FILL LINE 2" FROM PUMP - SIDE MOUNT	1	KMEM
DC-30-2300		2" AKRON #8800 SERIES - S.S. BALL TANK FILL, SIDE MOUN	1	KMEM
DC-30-6500		PUSH/PULL CONTROL FOR TANK FILL	1	KMEM
		****** DISCHARGES & ACCESSORIES, TILLER - SIDE MOUNT**	**1**	**KMEM**
		DRIVER'S SIDE #1 MAIN DISCHARGE	**1**	**KMEM**
DC-35-0010		DS MAIN DISCHARGE #1 - SIDE MOUNT	1	KMEM
DC-35-0110		2 1/2" AKRON #8800 SERIES - S.S. BALL, DS #1, SIDE MOUNT	1	KMEM
DC-35-1815		DS #1 DISCH - 2 1/2" STRAIGHT NST & 30-DEGREE NST ELBOW	1	KMEM
DC-35-2010		2 1/2" NST PRESSURE VENTED CAP - DS DISCHARGE #1	1	KMEM
DC-35-2410		PUSH/PULL CONTROL FOR DS DISCHARGE #1 -SIDE MOUNT	1	KMEM
DC-35-3110		INNOVATIVE CONTROLS LIQUID FILLED 2 1/2" PRESS GAUGE SS- DS DISCHARGE #1	1	KMEM
		DRIVER'S SIDE #2 MAIN DISCHARGE	**1**	**KMEM**
DC-35-5010		DS MAIN DISCHARGE #2 - SIDE MOUNT	1	KMEM
DC-35-5110		2 1/2" AKRON #8800 SERIES - S.S. BALL, DS #2, SIDE MOUNT	1	KMEM
DC-35-6815		DS #2 DISCH - 2 1/2" STRAIGHT NST & 30-DEGREE NST ELBOW	1	KMEM
DC-35-7010		2 1/2" NST PRESSURE VENTED CAP - DS DISCHARGE #2	1	KMEM
DC-35-7410		PUSH/PULL CONTROL FOR DS DISCHARGE #2 -SIDE MOUNT	1	KMEM
DC-35-8110		INNOVATIVE CONTROLS LIQUID FILLED 2 1/2" PRESS GAUGE SS- DS DISCHARGE #2	1	KMEM
		OFFICER'S SIDE #1 MAIN DISCHARGE	**1**	**KMEM**
DC-39-0010	>	OS MAIN DISCHARGE #1 - SIDE MOUNT	1	KMEM
DC-39-0110		2 1/2" AKRON #8800 SERIES - S.S. BALL, OS #1, SIDE MOUNT	1	KMEM
DC-39-1815		OS #1 DISCH - 2 1/2" STRAIGHT NST & 30-DEGREE NST ELBOW	1	KMEM
DC-39-2010		2 1/2" NST PRESSURE VENTED CAP - OS DISCHARGE #1	1	KMEM
DC-39-2410		PUSH/PULL CONTROL FOR OS DISCHARGE #1 -SIDE MOUNT	1	KMEM
DC-39-3110		INNOVATIVE CONTROLS LIQUID FILLED 2 1/2" PRESS GAUGE SS- OS DISCHARGE #1	1	KMEM
		OFFICER'S SIDE #2 MAIN DISCHARGE	**1**	**KMEM**
DC-39-5010	>	OS MAIN DISCHARGE #2 - SIDE MOUNT	1	KMEM

PART NO	S	DESCRIPTION	QTY	ID
DC-39-5110		2 1/2" AKRON #8800 SERIES - S.S. BALL, OS #2, SIDE MOUNT	1	KMEM
DC-39-6815		OS #2 DISCH - 2 1/2" STRAIGHT NST & 30-DEGREE NST ELBOW	1	KMEM
DC-39-7010		2 1/2" NST PRESSURE VENTED CAP - OS DISCHARGE #2	1	KMEM
DC-39-7410		PUSH/PULL CONTROL FOR OS DISCHARGE #2 -SIDE MOUNT	1	KMEM
DC-39-8110		INNOVATIVE CONTROLS LIQUID FILLED 2 1/2" PRESS GAUGE SS- OS DISCHARGE #2	1	KMEM
		CROSSLAY #1 DISCHARGE	**1**	**KMEM**
DC-47-0400		CROSSLAY #1, 1 1/2" - AERIAL	1	KMEM
DC-47-1110		CROSSLAY #1 CAPACITY - 200' OF 1 3/4" HOSE	1	KMEM
DC-47-1410		CROSSLAY #1 - DOUBLE STACK HOSE DESIGN	1	KMEM
DC-47-1510		1 1/2" NST CHICKSAN SWIVEL - CROSSLAY #1	1	KMEM
DC-47-2110		CROSSLAY #1, PLUMBING, 2" STAINLESS STEEL PIPING	1	KMEM
DC-47-2210		2" AKRON #8800 SERIES - S.S. BALL, VALVE CROSSLAY #1, DISCH	1	KMEM
DC-47-2610		PUSH/PULL 1/4 TURN CONTROL CROSSLAY #1	1	KMEM
DC-47-3210		INNOVATIVE CONTROLS LIQUID FILLED 2 1/2" PRESS GAUGE SS - CROSSLAY #1	1	KMEM
		CROSSLAY #2 DISCHARGE	**1**	**KMEM**
DC-47-5400		CROSSLAY #2, 1 1/2" - AERIAL	1	KMEM
DC-47-6110		CROSSLAY #2 CAPACITY - 200' OF 1 3/4" HOSE	1	KMEM
DC-47-6410		CROSSLAY #2 - DOUBLE STACK HOSE DESIGN	1	KMEM
DC-47-6510		1 1/2" NST CHICKSAN SWIVEL - CROSSLAY #2	1	KMEM
DC-47-7110		CROSSLAY #2, PLUMBING, 2" STAINLESS STEEL PIPING	1	KMEM
DC-47-7210		2" AKRON #8800 SERIES - S.S. BALL, VALVE CROSSLAY #2,	1	KMEM
DC-47-7610		PUSH/PULL 1/4 TURN CONTROL CROSSLAY #2	1	KMEM
DC-47-8210		INNOVATIVE CONTROLS LIQUID FILLED 2 1/2" PRESS GAUGE SS - CROSSLAY #2	1	KMEM
		CROSSLAY & SPEEDLAY OPTIONS - RM AERIAL	**1**	**KMEM**
DC-50-7015	>	VINYL CROSS LAY COVER	1	KMEM
DC-50-7030		CROSSLAY COVER RED IN COLOR	1	KMEM
		PUMP PANELS & ACCESSORIES	**1**	**KMEM**
DD-65-0515		SIDE MOUNT PUMP PANEL - TDA	1	KMEM
DD-65-4115		SIDE MOUNT PANELS - 12 GAUGE BRUSHED STAINLESS STEEL	1	KMEM
DD-65-4710		VERTICALLY HINGED GAUGE PANEL - SIDE MOUNT	1	KMEM
DD-65-4810		OFFICER SIDE VERTICALLY HINGED PUMP ACCESS DOOR - SIDE MOUNT	1	KMEM
DD-65-5150		PANEL FASTENERS	1	KMEM
DD-65-5510		CAPS AND ADAPTERS SAFETY TETHER - BALL CHAIN	1	KMEM
DD-65-8820		PUMP PANEL DISCH./SUCTION TRIM PLATES, HIGH POLISHED	1	KMEM
DD-65-9000		DISCHARGE GAUGE TRIM BEZELS	1	KMEM
DD-65-9110		IDENTIFICATION PLATES	1	KMEM
DD-66-0100		PUMP OPERATOR'S PANEL LIGHT SHIELD	1	KMEM
DD-66-0135		TECNIQ E18 LED LIGHTS - LIGHT SHIELD	1	KMEM
DD-66-2100		OS PUMP PANEL LIGHTING	1	KMEM
DD-66-2130		TECNIQ EON 3 LED LIGHTS - OS PUMP PANEL	1	KMEM
		PUMP OPERATOR'S PANEL - SIDE MOUNT, AERIAL	**1**	**KMEM**
DD-70-2334		FIRE RESEARCH "IN CONTROL" PRESSURE GOVERNOR CONTROL @ PANEL	1	KMEM
DD-70-2410		PUMP PRESSURE & VACUUM TEST PORTS @ PANEL	1	KMEM
DD-70-4125	>	DELETE - MASTER PRESSURE & COMPOUND GAUGES	1	KMEM
DD-70-4130		**** CONSIDER DELETING MASTER GAUGES - IN GOVERNOR DISPLAY ****	1	KMEM
DD-70-4680		PRESSURE & COMPOUND GAUGE RANGES - SINGLE STAGE	1	KMEM
DD-70-4900		AUXILIARY ENGINE COOLER	1	KMEM
		WATER TANK LEVEL GAUGE - AERIAL	**1**	**KMEM**
DD-72-0410		FIRE RES - TANK VISION #WLA300-A00 LED WATER TANK GAUGE - PRIMARY	1	KMEM
DD-72-1300	>	FIRE RES WATER LEVEL - 1/4" NPT PRESS TRANS @ BOTTOM TANK	1	KMEM
DD-80-0110		SLIDE-OUT STEP @ DRIVER'S PUMP OPERATOR'S PANEL	1	KMEM
DE-00-1080	>	**** HEADER, 100' & 101' TDA, WATER TANK	1	KMEM
		WATER TANKS/OPTIONS AERIALS	**1**	**KMEM**
DE-05-1500	>	UPF POLYIIE TANK, 250 GAL. - AERIAL	1	KMEM
DE-05-6000		TANK DESCRIPT, CONSTR AND MOUNT, UPF POLY IIE TANK	1	KMEM

PART NO	S	DESCRIPTION	QTY	ID
JA-00-0100		BODY AND COMPARTMENT HEADER (ALL AERIAL DEVICES)	1	KMEM
JA-00-5090		GENERAL ALUMINUM BODY DESCRIPTION FOR 100' TILLER AERIALS	1	KMEM
TF-00-8850		TILLER, T-T ACCESS LADDER TRACTOR CAB, DRIVER SIDE - PUMP (SWITCH BACK)	1	KMEM
TF-00-8950		TILLER TRACTOR, DS ACCESS LADDER FORWARD OF FENDER (SWITCH BACK)	1	KMEM
TF-09-0300	>	COMPARTMENTATION, 101-TIL STYLE #1H	1	KMEM
		****** HEADER, TDA BODY OPTIONS**	**1**	**KMEM**
TF-10-0100		BEVELED OVERLAPPING DOORS, ALL COMPARTMENTS, ALL DEVICES	1	KMEM
TF-10-1900		BRUSHED FINISHED DOOR PANS - 2" THICK DOORS	1	KMEM
TF-10-2700		DOOR HINGE FOR BEVELED OVERLAPPING HINGED DOORS	1	KMEM
TF-10-2800		DOOR SEAL FOR BEVELED OVERLAPPING HINGED DOORS	1	KMEM
TF-10-2940		ROTARY LATCHES WITH D-RING HANDLES	1	KMEM
TF-10-3150		GAS SHOCK ON HORIZONTALLY & VERTICALLY HINGED DOORS	1	KMEM
TF-10-6000		COMPARTMENT FLOORS (AERIALS ONLY)	1	KMEM
TF-11-0500		COMPARTMENT GENERAL DESCRIPTION, ALL LADDERS & PLATFORMS	1	KMEM
TF-11-1470		PAINTED REAR BODY PANEL, TILLERS	1	KMEM
TF-11-2260		1/2 WIDTH S. S. OUTRIGGER COVER PANEL, TILLER DEVICES	1	KMEM
TF-11-3030		BODY RUB RAILS, TREAD PLATE	1	KMEM
TF-12-1000		RUNNING BOARD STEPS (AERIALS ONLY)	1	KMEM
TF-13-3500		TILLER, TILLER CAB ACCESS LADDERS	1	KMEM
TF-13-5060		TILLER, BODY HANDRAILS	1	KMEM
TF-14-1100		ALUMINUM WHEEL WELL LINERS, TILLER TRAILER	1	KMEM
TF-14-1705		POLISHED ALUMINUM FENDERETTES, TILLER TRAILER AXLE	1	KMEM
TF-14-2000		TILLER TRACTOR, REAR WHEEL WELLS & FENDERS - ROLLED TREADPLATE	1	KMEM
TF-14-2070		TILLER TRACTOR, POLISHED ALUMINUM FENDERETTES	1	KMEM
TF-14-5005		REAR MUD FLAPS, TILLER ONLY	1	KMEM
TF-14-6500		PAINTED REAR TOW EYES, THROUGH REAR SHEET	1	KMEM
		****** HEADER, COMPARTMENT ACCESSORIES - TDA**	**1**	**KMEM**
TJ-05-1010		ADJUSTABLE SHELF DESCRIPTION - TDA	1	KMEM
TJ-05-2000	>	(AUTO QTY) ADJUSTABLE SHELF(S), MOUNTED AS DIRECTED	10	KMEM
TJ-10-1010		250#, FLOOR MOUNTED, ROLLOUT TRAY DESCRIPTION - TDA	1	KMEM
TJ-10-1105	>	(AUTO QTY) ROLLOUT TRAY(S), MOUNTED AS DIRECTED	4	KMEM
TJ-55-1020		SWING OUT TOOL BOARD, PAC TRAC DOUBLE FACED EXTRUSION - TDA	1	KMEM
TJ-55-1200	>	(AUTO QTY) SWING OUT TOOL BOARD(S), MOUNTED AS DIRECTED	2	KMEM
	>	**"NOTE" READ THIS BEFORE ADDING ANY ADDITIONAL GROUND LADDERS**	**1**	**KMEM**
		****** HEADER, 101 TDA GROUND LADDERS**	**1**	**KMEM**
TN-00-5100	>	CENTER LADDER STORAGE, 101' LADDER, TILLER	1	KMEM
TN-00-7050		HINGED PAINTED ALUM DOOR, LADDER STORAGE, TILLER ONLY	1	KMEM
TN-01-1040		ALCO-LITE LADDER COMP, 101' TILLER, 115 FEET COMP	1	KMEM
TN-02-1150		ALCO-LITE PEL-35 35' 2-SECTION EXTENSION LADDER (ALUM)	1	KMEM
TN-02-1170		ALCO-LITE PEL-24 24' 2-SECTION EXTENSION LADDER (ALUM)	1	KMEM
TN-02-2510		ALCO-LITE PRL-16 16' ROOF LADDER W/FOLDING HOOKS (ALUM)	2	KMEM
TN-02-7000		ALCO-LITE AEL-14 14' ATTIC EXTENSION LADDER (ALUM)	1	KMEM
TN-02-8010		ALCO-LITE FL-10 10' FOLDING ATTIC LADDER (ALUM)	1	KMEM
		****** HEADER, PIKE POLES & HOLDERS - AERIALS**	**1**	**KMEM**
TN-10-0500	>	PIKE POLE TUBE(S) - AERIALS	6	KMEM
TN-10-2030		FIRE HOOKS UNLIMITED PIKE POLES 2-6', 2-8', & 2-12' WITH FIB	1	KMEM
TN-20-0000		ADDITIONAL ITEMS SHIPPED WITH VEHICLE, ALL AERIAL DEVICES	1	KMEM
		****** HEADER, LOOSE EQUIPMENT - AERIAL**	**1**	**KMEM**
TN-35-1015		TWO (2) ZICO #SAC-44 FOLDING WHEEL CHOCKS, (2) MTD DRIVER SIDE	1	KMEM
		****** HEADER, 101' TILLER TRAILER**	**1**	**KMEM**
TP-00-0450		TILLER TRAILER FRAME ASSEMBLY, 101' LADDER	1	KMEM
TP-00-0480		TILLER TRAILER WHEELBASE - 343"	1	KMEM
TP-00-0505		TRAILER, STEERING AXLE, MERITOR MFS-20-133A-N, 23,000	1	KMEM
TP-00-0550		TRAILER, MERITOR STEER AXLE EX-225 DISK BRAKES	1	KMEM
TP-00-0600		TILLER TRAILER, SUSPENSION, RIDEWELL RAS-227 AIR RIDE	1	KMEM
TP-00-0700	>	TILLER TRAILER, STEERING AXLE POLISHED ALUMINUM WHEELS	1	KMEM
TP-00-0750		TILLER TRAILER, GOODYEAR G296 MSA TIRES 425/65R X 22.5, 24,400#	1	KMEM

PART NO	S	DESCRIPTION	QTY	ID
TP-00-0800		TIRE PRESSURE MONITORING - VALVE STEM CAPS - TDA TIRES	1	KMEM
TP-00-0830		**** TIRE PRESSURE SYSTEMS MUST MATCH ON CHASSIS AND TRAILER ****	1	KMEM
TP-00-0850		TILLER TRAILER, STEERING SYSTEM, ROSS TA-70	1	KMEM
TP-00-0875		TILLER TRAILER, STEERING PUMP - DIRECT DRIVE ON CUMMIN ISX ENGINE	1	KMEM
TP-00-0950		TILLER TRAILER, 100' & 101' LADDER, FIFTH WHEEL PIVOT	1	KMEM
		****** HEADER, TILLER CAB & OPTIONS**	**1**	**KMEM**
TP-50-1000		TILLER CAB, GENERAL DESCRIPTION	1	KMEM
TP-50-1100		TILLER CAB, INTERIOR	1	KMEM
TP-50-1155		TILLER CAB, INTERIOR PAINT - TEXTURED GRAY	1	KMEM
TP-50-1220	>	TILLER CAB SEAT, USSC	1	KMEM
TP-50-1490		USSC SEATING MATERIAL - BLACK CORDURA	1	KMEM
TP-50-1520		TILLER CAB SEAT, RED LAP SEAT BELT	1	KMEM
TP-50-1550		TILLER CAB WIND/GLASS, "NO POST VISION", SLIDING DOORS	1	KMEM
TP-50-1600		TILLER CAB, WINDSHIELD WIPERS, SINGLE PANOGRAPHIC	1	KMEM
TP-50-1610		TILLER CAB, STEERING WHEEL/COLUMN	1	KMEM
TP-50-1650		TILLER CAB, LEXAN SUNVISOR	1	KMEM
TP-50-1800		TILLER CAB, ALUMINUM KNURLED GRAB RAILS, EACH SIDE	1	KMEM
TP-50-1910		TILLER CAB, VELVAC # 708164-5, 6-1/2" x 6" CONVEX MIRROR FRONT CORNER OF CAB	1	KMEM
TP-50-1915		TILLER CAB, GROTE 6" CONVEX MIRROR ON BODY FORWARD OF CAB	1	KMEM
TP-50-2000		TILLER CAB, SLIDING DOORS	1	KMEM
TP-50-5000		TILLER CAB, INSTRUMENT & SWITCH PANEL	1	KMEM
TP-50-5010		TILLER CAB, TURNSIGNAL INDICATORS, WELDON #9186-1500-20, AMBER, DASH MOUNTED	1	KMEM
TP-50-5025		TILLER CAB, WELDON 8080-8000-13 WHITE/RED LED INTERIOR LIGHTS	1	KMEM
TP-50-5200		TILLER CAB, PARK BRAKE INTERLOCK WARNING - CENTER WHEEL BUTTON	1	KMEM
TP-50-5210		TILLER CAB, SAFETY START SYSTEM - TILLER CAB STEERING COLUMN (HIGH BEAM SWITCH)	1	KMEM
TP-50-5300		TILLER CAB, BUZZER - LINEMASTER #491-S FOOT SWITCHES	1	KMEM
TP-50-6000		TILLER CAB, AIR - HEATER - ESPAR AIRTRONIC, 7500 BTU - DIESEL, SINGLE OUTLET LH	1	KMEM
TP-50-6005		TILLER CAB, AIR - HEATER - RHEOSTAT CONTROL - ESPAR AIRTRONIC D2,	1	KMEM
TP-50-6050		TILLER CAB, HEATER - BUS AIR 12VDC - 1100 BTU	1	KMEM
		****** HEADER, 101' TILLER LADDER**	**1**	**KMEM**
TQ-00-2100		101' LADDER, TILLER GEN, INTENT & DESIGN STANDARDS	1	KMEM
TQ-00-3050		MOUNTING OF AERIAL, TILLERS	1	KMEM
TQ-00-3520		HEIGHT AND REACH, 101' TILLER	1	KMEM
TQ-00-4000		MATERIAL STANDARDS, ALL DEVICES	1	KMEM
TQ-00-5080		100' & 101' LADDER, TILLER. HYDRAULIC SYSTEM	1	KMEM
TQ-00-5140		PARKER HOSE KIT - 2 JACK UNIT TDA	1	KMEM
TQ-00-6150		HYDRAULIC PUMP - PRESSURE COMPENSATED (TDA)	1	KMEM
TQ-00-7040		HYDRAULIC RESERVOIR - TDA	1	KMEM
TQ-00-7065		HYDRAULIC OIL - REGULAR - A/W 46 - 60 GAL	1	KMEM
TQ-00-7120		DIVERTER VALVE, TDA	1	KMEM
TQ-00-7240		ELECTRIC OUTRIGGER HYDRAULIC CONTROL VALVE - TDA, BANG BANG	1	KMEM
TQ-00-7480		ELECTRIC TURNTABLE HYDRAULIC CONTROL VALVE, TDA LADDERS	1	KMEM
TQ-00-7510		HYDRAULIC SYSTEM FILTRATION, TDA	1	KMEM
TQ-00-8580		TRACTOR DRAWN LADDER, "IQAN" MOTION CONTROL SYSTEM - ELECTRIC CONTROLS @ TT	1	KMEM
TQ-00-8700		HYDRAULIC PUMP PRESSURE - DISPLAY	1	KMEM
TQ-00-8710		ELEVATION ANGLE OF LADDER - DISPLAY	1	KMEM
TQ-00-8715		VERTICAL HEIGHT OF LADDER - DISPLAY	1	KMEM
TQ-00-8725		DEGREE OF ROTATION FROM VEHICLE CENTERLINE - DISPLAY	1	KMEM
TQ-00-8735		E-ZONE SHORT JACK WARNING - DISPLAY	1	KMEM
TQ-00-8740		CRADLE ALIGNMENT MESSAGE - DISPLAY	1	KMEM
TQ-00-8750		DEVICE LOAD MONITORING - DISPLAY	1	KMEM
TQ-00-8760		E-SPEED LADDER TIP SPEED CONTROL - DISPLAY	1	KMEM

PART NO	S	DESCRIPTION	QTY	ID
TQ-00-8765		E-CUSH RAMP CONTROL FOR ELEVATION - DISPLAY	1	KMEM
TQ-00-8770		E-CUSH RAMP CONTROL FOR EXTENSION & RETRACTION - DISPLAY	1	KMEM
TQ-00-8890		WARNING MESSAGES - TURNTABLE ONLY	1	KMEM
TQ-00-9580		100' & 101' LADDER, TILLER. EMERG HYD. PUMP, EPU	1	KMEM
TQ-01-1010		PTO CONTROLS IN CAB FOR ALL TILLER AERIAL DEVICES	1	KMEM
TQ-01-1100		FAST IDLE CONTROL FOR ALL AERIAL DEVICES	1	KMEM
TQ-02-0315		101' LADDER, TILLER TORQUE BOX	1	KMEM
TQ-02-1315		101' LADDER, TILLER OUTRIGGERS, 16'	1	KMEM
TQ-02-1785		101' LADDER, TILLER OUTRIGGERS - HORIZONTAL CYLINDERS	1	KMEM
TQ-02-1985		101' LADDER, TILLER OUTRIGGERS - VERTICAL CYLINDERS	1	KMEM
TQ-02-2100		IQAN - OUTRIGGER STRING POTENTIOMETER - TWO (2) OUTRIGGERS	1	KMEM
TQ-02-2220		OUTRIGGER/JACK FOOT PADS, TILLER DEVICES	1	KMEM
TQ-02-2370		AUXILARY JACK PADS, TWO (2) 24" X 24" x 1" POLY	1	KMEM
TQ-02-2500		OUTRIGGER INTERLOCK SYSTEM & ALARM, ALL DEVICES	1	KMEM
		****** HEADER - OUTRIGGER LIGHTING, TWO (2) OUTRIGGERS**	**1**	**KMEM**
TQ-02-5125		AKRON LED OUTRIGGER LAMPS, 2-OUTRIGGERS	1	KMEM
TQ-02-5200		HALOGEN OUTRIGGER GROUND LIGHTS - RECTANGLE, 2-OUTRIGGERS	1	KMEM
TQ-02-5275		OUTRIGGER WARNING LIGHTS FROM LIGHT PACKAGE	1	KMEM
TQ-02-6005		OUTRIGGER WARNING LIGHT ACTIVATION, PRIMARY WARNING	1	KMEM
TQ-02-6800		OUTRIGGER SCOTCHLITE, WHITE	1	KMEM
TQ-02-7520		100' & 101' LADDER, TILLER ELECTRIC OUTRIGGER CONTROLS	1	KMEM
TQ-02-9230		OUTRIGGER LEVEL SIDE TO SIDE, ALL TILLER DEVICES	1	KMEM
TQ-03-1650		101' LADDER, TILLER TURNTABLE	1	KMEM
TQ-03-3010		TURNTABLE DECK - ALUMINUM TREADPLATE	1	KMEM
TQ-03-3500		TDA NOTICE!!! TURNTABLE DECK	1	KMEM
TQ-04-1852		HEEL PIN STEP ON TURNTABLE, 79', 103', 109' & 123' & 100' M.M. LADDERS	1	KMEM
TQ-04-1855		TURNTABLE HANDRAILS, KNURLED ALUMINUM, 3-SIDES	1	KMEM
TQ-04-2145		HEEL PINS - 100' & 101' TDA	1	KMEM
TQ-04-2300		STAINLESS STEEL CRADLE ALIGNMENT ARROWS ON TURNTABLE	1	KMEM
TQ-04-2800		SAFETY CHAINS BETWEEN TURNTABLE HANDRAIL, REAR MOUNTS & TDA	1	KMEM
TQ-04-7900		101' LADDER, TILLER TURNTABLE SWIVEL	1	KMEM
TQ-04-9000		IQAN - SWIVEL ROTATION ENCODER	1	KMEM
TQ-06-0750		101' LADDER, TILLER, LADDER CONSTRUCTION	1	KMEM
TQ-06-0900		STAINLESS STEEL EGRESS W/TIP SKID GAURDS	1	KMEM
TQ-06-2080		101' H.D. 4-SECTION TILLER, LADDER DIMENSIONS	1	KMEM
TQ-06-3000		RUNG COVERS - PHOTOLUMINESCENT, ALL DEVICES	1	KMEM
TQ-06-4005		SINGLE PAIR FOLDING STEPS @ LADDER TIP	1	KMEM
TQ-06-4100		RED SCOTCHLITE MATERIAL ON LAST 6' OF LADDER TIP	1	KMEM
TQ-06-9000		AERIAL TRAVEL SUPPORT, ALL DEVICES	1	KMEM
TQ-06-9020		CRADLE ILLUMINATION LIGHTS - HALOGEN LIGHTS	1	KMEM
TQ-07-2100		101' LADDER, TILLER, ELEVATION SYSTEM	1	KMEM
TQ-07-2800		IQAN - INCLINOMETER	1	KMEM
TQ-07-2801		IQAN - MOMENT LOAD INDICATOR	1	KMEM
TQ-07-2805		IQAN - E-CUSH CONTROL, ELEVATION SYSTEM - LADDER	1	KMEM
TQ-08-2100		101' LADDER, TILLER, ROTATION SYSTEM	1	KMEM
TQ-08-2800		ROTATION MOTOR AND BRAKE - 41" EXTERNAL BEARINGS	1	KMEM
TQ-08-2950		SWING DRIVE ADJUSTMENT	1	KMEM
TQ-08-3000		IQAN - "E-SPEED" SAFETY SYSTEM, LADDERS	1	KMEM
TQ-08-3100		IQAN - "E-ZONE" ROTATION SAFETY SYSTEM, 2-OUTRIGGERS	1	KMEM
TQ-09-2100		101' LADDER, TILLER, EXTENSION/RETRACTION SYSTEM	1	KMEM
TQ-09-2350		EXTENSION CYLINDERS PAINTED LADDER PAINT COLOR	1	KMEM
TQ-09-2800		IQAN - EXTENSION SYSTEM STRING POTENTIOMETER	1	KMEM
TQ-09-2810		IQAN - "E-CUSH" EXTENSION/RETRACTION SYSTEM - LADDERS	1	KMEM
TQ-09-3048		LADDER SLIDE PADS, 100' & 101' LADDER	1	KMEM
		LADDER EXTENSION NUMBERS, ALL DEVICES	**1**	**KMEM**
TQ-09-3150		LADDER LEVEL INDICATOR (BASE SECTION) - LIGHTED	1	KMEM
TQ-09-3250		LADDER, CABLE/HOSE/WIRE ROUTING, 101' LADDER	1	KMEM
		****** HEADER - LADDER, 120 VOLT ELECTRICAL SYSTEM & ACCESSORIES**	**1**	**KMEM**
TQ-10-0100		LADDER, 120 VOLT ELECTRICAL SYSTEM	1	KMEM
TQ-10-0125		DELETE LADDER TIP RECEPTACLE	1	KMEM

PART NO	S	DESCRIPTION	QTY	ID
		****** HEADER - LADDER, 12 VOLT ELECTRICAL SYSTEM & ACCESSORIES**	**1**	**KMEM**
TQ-10-1018		HEEL PIN STEP LIGHTS - TECNIQ EON 3 LED LIGHTS	1	KMEM
TQ-10-1040		TURNTABLE CONTROL CONSOLE LIGHTING - LUMA BAR LED H2O	1	KMEM
TQ-10-1060		TURNTABLE CONSOLE STEP LIGHT - TECNIQ EON 3 LED	1	KMEM
TQ-10-1110		TWO (2) UNITY SPOTS @ LADDER BASE SECTION	1	KMEM
TQ-10-1210		ONE (1) UNITY SPOT & ONE (1) FLOOD @ LADDER TIP	1	KMEM
TQ-12-0010		LADDER, CONTROL STATION	1	KMEM
TQ-12-0060		TDA LADDERS, CONSOLE LOCATED @ LH SIDE OF TURNTABLE, STD	1	KMEM
TQ-12-0085		PAINTED ALUMINUM TURNTABLE CONSOLE - MATCH LADDER COLOR	1	KMEM
TQ-12-2100		101' LADDER, TILLER TURNTABLE CONTROL STATION	1	KMEM
TQ-12-2520		FIRE RESEARCH INSIGHT FLOWMETER @ TURNTABLE CONSOLE	1	KMEM
TQ-12-2595		TURNTABLE CONSOLE COVER - PAINTED RADIUS	1	KMEM
TQ-14-1200		LADDER, FIRE RESEARCH ACT -2 WAY COMMUNICATION SYSTEM - LOWER CONTROL	1	KMEM
TQ-14-1205		LADDER, FIRE RESEARCH ACT 2-WAY COMMUNICATION SYSTEM - UPPER SPEAKER/MIC	1	KMEM
TQ-18-0800		101' LADDER, TILLER LADDER WATERWAY SYSTEM	1	KMEM
TQ-18-1420		101' LADDER, TILLER LADDER WATERWAY	1	KMEM
TQ-18-2520		4" HEEL PIN SWIVEL - 100'	1	KMEM
TQ-18-2600		AUTOMATIC WATER DRAIN/VENT	1	KMEM
TQ-18-3000		ALL DEVICES, WATERWAY RELIEF VALVE	1	KMEM
TQ-18-3025		TILLER AERIAL WATERWAY DRAIN, 1 1/2" VALVE	1	KMEM
TQ-18-3600		TILLERS, SIDE INLETS 4" NST ADAPTERS W/CAPS	1	KMEM
TQ-18-3810		INNOVATIVE CONTROLS 2 1/2" GAUGE FOR AERIAL INLET, TILLERS	1	KMEM
TQ-18-4130	>	LADDER, AKRON #3480 "STREAMMASTER II" MONITOR	1	KMEM
TQ-18-4210	>	LADDER, AKRON #5178 NOZZLE	1	KMEM
TQ-18-4300		LADDER, AKRON MONITOR CONTROLS W/ AUTO STOW	1	KMEM
TQ-18-4505		LADDER, ELECTRIC SELECTABLE WATERWAY TROLLEY - NEW	1	KMEM
TQ-18-4950		"STORE FRONT BLITZ" DESCRIPTION	1	KMEM
TQ-20-2100		101' LADDER, TILLER LADDER CAPACITIES	1	KMEM
TQ-50-0200	>	FIRE DEPT AERIAL FAMILIARIZATION - PROVIDED BY REP	1	KMEM
TQ-50-0240	>	REP PROVIDED FAMILIARIZATION - FOUR (4) DAYS	1	KMEM
TQ-50-0600		AERIAL SERVICE, ALL DEVICES	1	KMEM
TQ-50-0700		WARNING DECALS, ALL DEVICES	1	KMEM
TQ-52-0100		AERIAL LADDER, MANUALS, TWO (2) SETS	1	KMEM
TQ-70-2100		101' LADDER, TILLER CERT. & TESTING	1	KMEM
		****** HEADER - PAINT SECTION - ALL UNITS ******	**1**	**KMEM**
UA-00-1100		GENERAL PAINT DESCRIPTION - ALL	1	KMEM
UA-00-1205		GENERAL PRIMER & PREP DESCRIPTION - TDA	1	KMEM
UA-00-1405		GENERAL FINISH PAINT DESCRIPTION - TDA	1	KMEM
UA-00-2705		BODY BUFFING & FINISH - TDA	1	KMEM
		****** HEADER - TDA BODY PAINT ******	**1**	**KMEM**
UA-03-0205		INSIDE/UNDERSIDE BODY PAINTED JOB COLOR - TDA	1	KMEM
UA-03-0305		JOB COLOR COMPARTMENT INT W/SPATTER PAINT - TDA	1	KMEM
UA-03-0905		SINGLE COLOR BODY PAINT SCHEME - TDA	1	KMEM
UA-03-2205		PUMPHOUSE & PLUMBING PAINTED JOB COLOR - TDA	1	KMEM
		****** HEADER - SINGLE AXLE CUSTOM CHASSIS PAINT (AERIAL)**	**1**	**KMEM**
UA-05-0050		CUSTOM CAB PRIMER & PREP	1	KMEM
UA-05-0070		CUSTOM FINISH PAINT & PREP	1	KMEM
UA-05-0200		TWO TONE CUSTOM CAB PAINT SCHEME	1	KMEM
UA-05-0350		CUSTOM CAB BUFFING & FINISH	1	KMEM
UA-05-0360		CUSTOM CAB INTERIOR PAINT - TEXTURED GRAY	1	KMEM
UA-05-0405		CUSTOM CHASSIS JOB COLOR FRAME RAILS	1	KMEM
UA-05-0500		CUSTOM CHASSIS WHEEL AND HUB PAINT - SINGLE AXLE	1	KMEM
UA-06-0200		LADDER, PAINTING, ALL DEVICES, WHITE #91528	1	KMEM
UA-06-0450		EXTENSION CYLINDERS PAINTED TO MATCH LADDER COLOR	1	KMEM
UA-06-0900		TORQUEBOX PAINT - JOB COLOR	1	KMEM
UA-06-1100		OUTRIGER PAINT - SILVER URETHABOND 104	1	KMEM
UA-06-1205		TURNTABLE PAINT - LADDER COLOR	1	KMEM
UA-06-1215		TURNTABLE CONSOLE PAINT - LADDER COLOR	1	KMEM

PART NO	S	DESCRIPTION	QTY	ID
UA-06-1225		LIFT CYLINDERS CONSOLE PAINT - LADDER COLOR	1	KMEM
UA-06-1500		LADDER RUST INHIBITOR - ALL DEVICES	1	KMEM
UA-06-2120	>	PAINT CODES, TWO-TONE COLORS, FILL IN BLANKS	1	KMEM
UA-06-2130		PAINT CODES, AERIAL DEVICE - WHITE #91528	1	KMEM
UA-06-2200		PINT OF TOUCH-UP PAINT	1	KMEM
UA-06-2515		FINALIZATION & DETAILING - TDA	1	KMEM
UA-06-2850		RUSTPROOFING WARRANTY, TEN (10) YEAR	1	KMEM
		****** HEADER, LETTERING & STRIPING - 100-TDA**	**1**	**KMEM**
UA-12-0100		COMPUTER GENERATED LETTERING	1	KMEM
UA-12-1200		GOLDLEAF W/ DROP SHADOW LETTERING ON FRONT CAB DOORS	1	KMEM
UA-12-1245		3" LETTERING ON FRONT CAB DOORS	1	KMEM
UA-12-1740		GOLDLEAF W/ DROP SHADOW LETTERING ON CREW CAB DOORS	1	KMEM
UA-12-1785		3" LETTERING ON CREW CAB DOORS	1	KMEM
UA-12-2700		GOLDLEAF W/ DROP SHADOW LETTERING ON FRONT OF CAB	1	KMEM
UA-12-2745		3" LETTERING ON FRONT OF CAB	1	KMEM
UA-12-3100		GOLDLEAF W/ DROP SHADOW LETTERING ON CAB SIDE PANEL	1	KMEM
UA-12-3145		3" LETTERING ON CAB SIDE PANEL	1	KMEM
UA-12-3660		SCOTCH-LITE W/ DROP SHADOW LETTERING ON REAR BODY PANEL	1	KMEM
UA-12-3750		4" LETTERING ON REAR BODY	1	KMEM
UA-13-0100		LETTERING FONT - BASIC BLOCK TYPE FONT	1	KMEM
UA-14-1310		LARGE CUSTOM FIRE DEPARTMENT LOGO	1	KMEM
UA-14-1315		SCOTCH-CAL W/ TWO COLORS - LARGE LOGO	1	KMEM
UA-14-1335	>	LOCATION - LARGE CUSTOM LOGO	1	KMEM
UA-16-1000		ACCENT STRIPING & SCROLL OPTIONS	1	KMEM
UA-16-1300		1/2" ACCENT STRIPE ON CAB PERIMETER	1	KMEM
UA-16-1310		GOLD LEAF ACCENT MATERIAL - CAB PERIMETER	1	KMEM
UA-16-1400		1/2" ACCENT STRIPE ON BODY COMPARTMENT PERIMETER	1	KMEM
UA-16-1410		GOLDLEAF ACCENT MATERIAL - BODY PERIMETER	1	KMEM
UA-16-1500		1/2" ACCENT STRIPE ON CAB PAINT BREAK LINE	1	KMEM
UA-16-1510		GOLD LEAF ACCENT MATERIAL - CAB PAINT BREAK LINE	1	KMEM
UA-20-0100		19" X 144" LETTERING PANELS ON BASE SECTION	1	KMEM
UA-20-0200		SIGN PANELS TO PAINTED TO MATCH AERIAL DEVICE COLOR	1	KMEM
UA-20-0520		SCOTCH-LITE W/ DROP SHADOW LETTERING FOR AERIAL	1	KMEM
UA-50-0300		NFPA REQUIRED SCOTCH-LITE STRIPINGSTRIPING - TDA AERIAL	1	KMEM
UA-50-0320		8" SCOTCH-LITE STRIPE ON CAB AND BODY - TDA AERIAL	1	KMEM
UA-58-5100		WHITE SCOTCH-LITE	1	KMEM
UA-80-6000		REAR CHEVRON STRIPING	1	KMEM
UA-80-6002		50% VERTICAL SURFACE	1	KMEM
UA-80-6030		6" REAR SCOTCH-LITE CHEVRON STRIPING	1	KMEM
UA-80-6070		RUBY RED & LEMON YELLOW SCOTCH-LITE	1	KMEM
		****** PROPOSED - AERIAL WARRANTY PKG, W/PUMP @ REAR OF SPEC**	**1**	**KMEM**
W6-00-000J		PROPOSED - KME WARRANTY, STARTING ON DELIVERY DATE	1	KMEM
W6-00-0010	**X** <	PROPOSED - 5 YEAR FCAM WARRANTY - CUSTOM CHASSIS	1	
		$19,500 per email Phil to Byron 9-27-16		
W6-00-003M	>	PROPOSED - 5 YEAR WARRANTY - BASE WITH CUSTOM CHASSIS	1	KMEM
W6-00-0163		PROPOSED - 10 YEAR CUMMINS ISX - EXTENDED WARRANTY	1	KMEM
W6-00-0210		PROPOSED - 5 YEAR ALLISON EVS TRANSMISSION WARRANTY	1	KMEM
W6-00-0230		PROPOSED - LIFETIME FRAMERAIL WARRANTY	1	KMEM
W6-00-0242		PROPOSED - SHEPPARD STEERING GEAR STANDARD - THREE YEAR WARRANTY	1	KMEM
W6-00-0254		PROPOSED - 5 YEAR MERITOR FRONT AXLE - WARRANTY	1	KMEM
W6-00-0258		PROPOSED - 5 YEAR MERITOR SINGLE AXLE REAR - WARRANTY	1	KMEM
W6-00-0320	>	PROPOSED - 10 YEAR CAB STRUCTURAL WARRANTY	1	KMEM
W6-00-0330		PROPOSED - 10 YEAR BODY STRUCTURAL WARRANTY	1	KMEM
W6-00-0390		PROPOSED - 10 YEAR CAB & BODY CORROSION WARRANTY	1	KMEM
W6-00-0450		PROPOSED - PAINT FINISH WARRANTY, TEN (10) YEAR	1	KMEM
W6-00-0470		PROPOSED - 5 YEAR LETTERING WARRANTY	1	KMEM
W6-00-0490		PROPOSED - 10 YEAR STAINLESS STEEL PIPING WARRANTY	1	KMEM
W6-00-0530		PROPOSED - REAR SUSPENSION - HENDRICKSON AIR RIDE - SGL AXLE -THREE YEAR WARRANT	1	KMEM

PART NO	S	DESCRIPTION	QTY	ID
W6-00-0570		PROPOSED - SAFEGUARD TECHNOLOGY - 10 YEAR - RUNG COVERS	1	KMEM
W6-00-0590		PROPOSED - 20 YEAR AERIAL LADDER WARRANTY	1	KMEM
W6-00-0655	>	PROPOSED - TEN 10 YEAR AERIAL WATERWAY WARRANTY	1	KMEM
W6-00-0670		PROPOSED - AERIAL DEVICE REPAIR POLICY AND LIABILITY DISCLAIMER	1	KMEM
W6-00-0695		PRO - AERIAL DEVICE HYDRAULIC COMPONENT WARRANTIES	1	KMEM
W6-00-0710		PROPOSED - LIFETIME POLY TANK WARRANTY - ALL TANKS	1	KMEM
W6-00-0820		PROPOSED - WATEROUS 5 YEAR PUMP WARRANTY (PARTS & LABOR)	1	KMEM
W6-00-0823	**X**	WATEROUS FCAM 5 YR WARRANTY CORRECTION	1	
W6-00-1153	**S**	DEALER PROVIDES WARRANTY TRANSPORT PROP and REQ	1	DLR
W6-00-1330		PROPOSED - AKRON - 5 YEAR LIMITED WARRANTY	1	KMEM
W6-00-1340		PROPOSED - AKRON HEAVY DUTY VALVE - 10 YEAR WARRANTY	1	KMEM
WA-00-0010		"AERIAL FIRE APPARATUS" NFPA 2016 STATEMENT OF EXCEPTIONS	1	KMEM

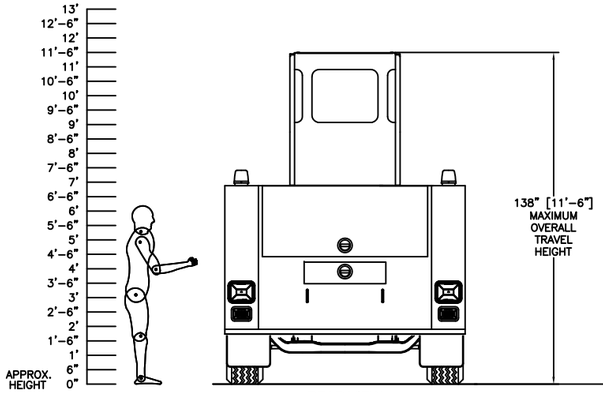

REAR VIEW

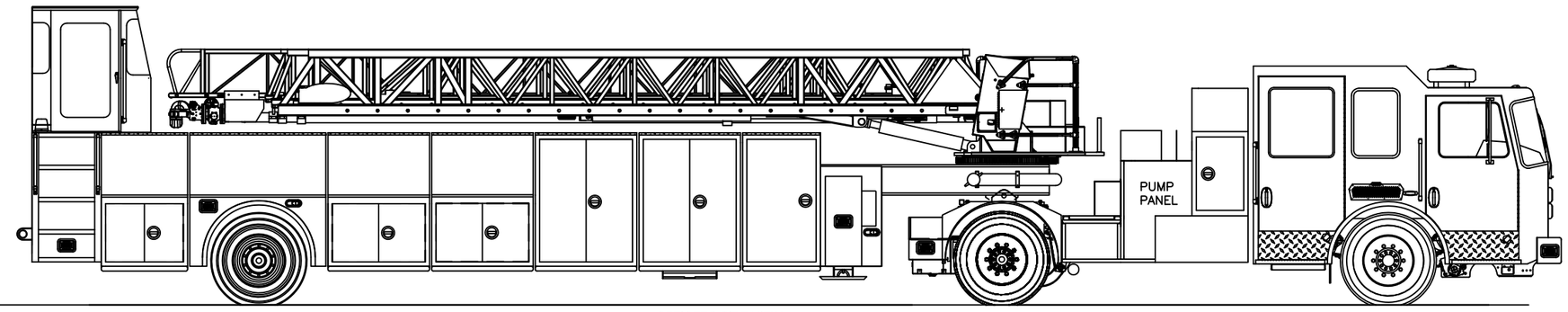

OFFICERS SIDE VIEW

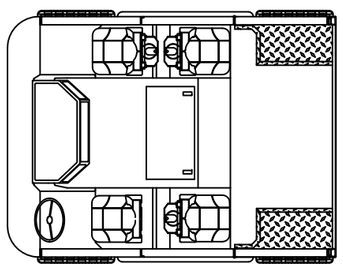

CAB INTERIOR LAYOUT

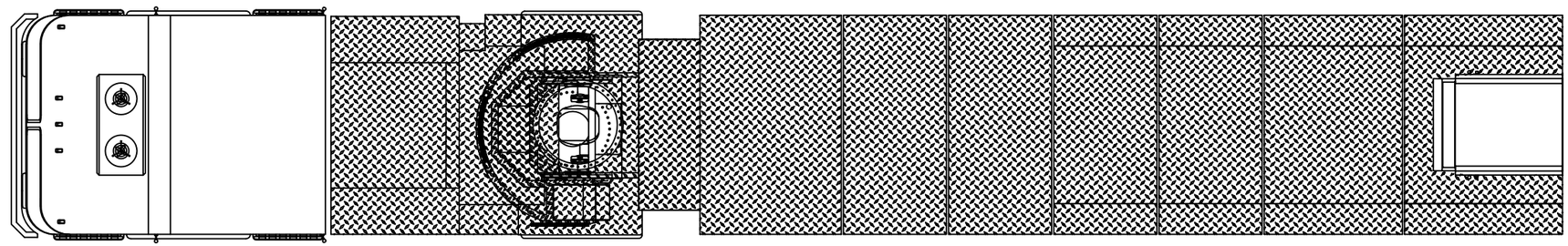

TOP VIEW

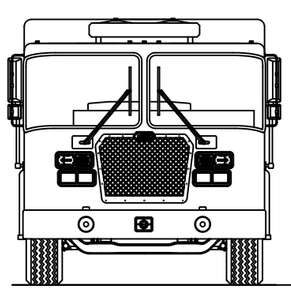

FRONT VIEW

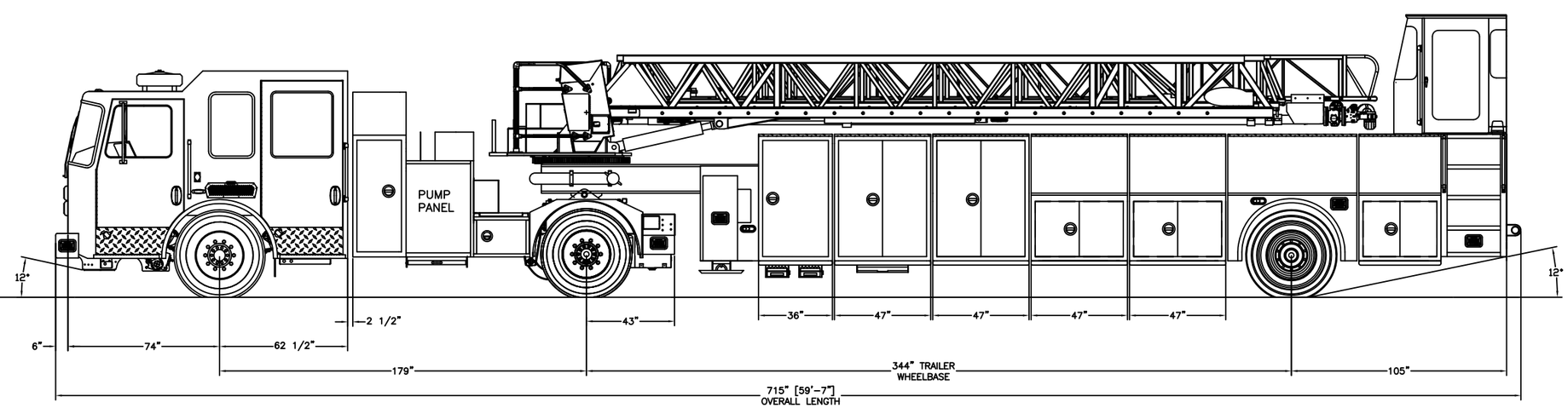

DRIVERS SIDE VIEW

SPECIFICATIONS

CHASSIS: PREDATOR MFD w/ 10" RAISED ROOF
ENGINE: CUMMINS ISX 12 500 HP w/ ENGINE BRAKE
TRANSMISSION: ALLISON 4000EVS 5-SPEED AUTOMATIC
FRONT AXLE: MERITOR MFS-20-133A-N; #21,500
DRIVE AXLE: MERITOR RS-30-185; #31,000
TRAILER AXLE: MERITOR MFS-20-133A-N; #23,000
PUMP: WATEROUS S100; 1,750 GPM SINGLE STAGE PUMP
TANK: 250 GALLONS

NOTES

THIS DRAWING IS A GENERAL CONFIGURATION AND MAY NOT NECESSARILY REFLECT ALL CONTRACTUAL OBLIGATIONS

CUSTOMER APPROVAL

NAME:

TITLE:

DATE:

SYM	DATE	REVISION DESCRIPTION	APP'D

SALES ENGINEER :

DIMENSIONS ARE APPROXIMATE & MAY VARY DUE TO BUILD ADJUSTMENTS

SCALE	DWG SIZE	DRAWN BY	DATE
3/8"=1'	D	Z.ZSCHUNKE	9-26-16
		APPROVED BY P.HOHERCHAK	

101' TRACTOR DRAWN LADDER

MAPC 14 MID RANGE

PROPOSAL DRAWING

KME FIRE GROUP

KOVATCH MOBILE EQUIPMENT
ONE INDUSTRIAL COMPLEX - NESQUEHONING, PA 18240

KME

FCAM BASIC SINGLE REAR AXLE

REAR MOUNT 79

FOOT AERIAL LADDER

“QUINT”

MAPC 15

Quote SO

MAPC/FCAM	MACP 15 BASIC 79' REAR MOUNT AERIAL QUINT

Sales Rep:

Terms:

Drawing #:
Est. Delivery Date: / /
Customer PO #:
Customer #:
QPF #:

Penalty:

Quote No: 10093-0008
10/04/2016

PART NO	S	DESCRIPTION	QTY	ID
		== REAR MOUNT LADDER - 713.016 07/13/16 ==	**1**	**KMEM**
		== LETTERING & STRIPING, 79' SA - 713.016 07/13/16 ==	**1**	**KMEM**
		== COMPARTMENT ACCESSORIES REARMOUNT AERIAL - 713.016 07/13/16 ==	**1**	**KMEM**
		== MISC AND LOOSE EQUIPMENT (AERIAL) - 713.016 07/13/16 ==	**1**	**KMEM**
		== AERIAL WARRANTY PACKAGE W/PUMP - 713.016 07/13/16 ==	**1**	**KMEM**
		DEALER ======= DEALER ======= DEALER	**1**	**DLR**
		QUOTE DATA VERSION: 0713.016 - 2016 DATA SET	**1**	**KMEM**
		INDEX OF PART NUMBERS	**1**	**KMEM**
		****** HEADER - CONTRACTS, PROPOSAL FORM, ETC @ FRONT OF SPECS**	**1**	**KMEM**
		****** PROPOSED - AERIAL SPEC BOILERPLATE**	**1**	**KMEM**
04-00-0000		PROPOSED - GENERAL INFORMATION - NFPA 1901	1	KMEM
04-00-0033		PROPOSED - COMPLETION INFO	1	KMEM
04-00-0040		PROPOSED - FMVSS CERTIFICATION	1	KMEM
04-00-0060		PROPOSED - RECORDS	1	KMEM
04-00-0075		PROPOSED - TOP OF THE LINE CHASSIS MULTIPLEX	1	KMEM
04-00-0107		PROPOSED - GENERAL CONSTRUCTION - AERIAL	1	KMEM
04-00-0120		PROPOSED - SINGLE LINE RESPONSIBILITY	1	KMEM
04-00-0130		PROPOSED - PRODUCT LIABILITY - $30,000,000.00	1	KMEM
04-00-0170		PROPOSED - CRITERIA & CODE CONFORMANCE - AERIAL	1	KMEM
04-00-0193		PROPOSED - PAINT PERFORMANCE CERTIFICATION	1	KMEM
04-00-0490		PROPOSED - PRICES & PAYMENTS	1	KMEM
04-00-0540		PROPOSED - BOND REQUIREMENTS	1	KMEM
04-00-0560		PROPOSED - PERFORMANCE BOND	1	KMEM
04-00-0580		PROPOSED - NON-COLLUSION AGREEMENT	1	KMEM
04-00-0630		PROPOSED - MATERIAL & WORKMANSHIP	1	KMEM
04-00-0660		PROPOSED - CONTRACT SPECIALIST	1	KMEM
04-00-0680		PROPOSED - APPROVAL DRAWING	1	KMEM
04-00-1200		PROPOSED - DELIVERY	1	KMEM
04-00-1215		PROPOSED - INSTRUCTION MANUALS, TWO (2) SETS - CD	1	KMEM
04-00-1215	**X**	POWERPOINT DELIVERY - PROPOSAL FCAM AERIAL	1	
04-00-1300		PROPOSED - VEHICLE FLUIDS PLATE	1	KMEM
04-00-1500		PROPOSED - MANUFACTURE GENERATED EXACT BLUEPRINT WITH BID	1	KMEM

PART NO	S	DESCRIPTION	QTY	ID
04-00-1521	X	PROPOSED - KME and BULLDOG FAMA MEMBERSHIP	1	
04-00-1540		PROPOSED - MANUFACTURED IN THE UNITED STATES	1	KMEM
04-00-1550		PROPOSED - ISO 9001 QUALITY MANAGEMENT SYSTEM	1	KMEM
04-00-1570		PROPOSED - NFPA TREAD PLATE CERTIFICATION	1	KMEM
04-00-2440		PROPOSED - UNDERWRITERS LABORATORIES (UL) TESTING - AERIAL	1	KMEM
04-00-2445		PROPOSED - UNDERWRITERS LABORATORIES (UL) TESTING - FCAM	1	DLR
07-00-0015		"AERIAL FIRE APPARATUS" NFPA 2016 CHAPTERS OF COMPLIANCE	1	KMEM
08-00-0000		VEHICLE DATA PLATE DESCRIPTION	1	KMEM
14-00-0000		NFPA ROLLOVER STABILITY GENERAL STATEMENT	1	KMEM
15-00-0010	>	PROPOSED - PRINCIPAL APPARATUS DIMENSIONS & GVWR	1	KMEM
15-00-0050		!!! CRITICAL OVERALL HEIGHT REQUIREMENT !!! - "NO"	1	KMEM
15-00-0150		!!! CRITICAL OVERALL LENGTH REQUIREMENT !!! - "NO"	1	KMEM
AA-00-002A		SERVICE CENTER - PROPOSAL FCAM	1	DLR
BA-00-0012		<1> 79-SA AERIALCAT LADDER	1	KMEM
BA-00-3000		SEAT AND SEAT BELT ANCHOR TESTING	1	KMEM
BA-02-0117		<2> PREDATOR - SINGLE AXLE - 79' RM	1	KMEM
BA-02-2007		<3> 138" TRAVEL HEIGHT - 79' SA	1	KMEM
BA-03-2020		<4> X-HI BODY, 79SA WITH PUMP	1	KMEM
BA-04-0505		AERIAL CHASSIS, REAR MOUNT PREDATOR -SINGLE AXLE (HEAVY)	1	KMEM
		****** HEADER - 100" PREDATOR CAB ******	**1**	**KMEM**
BA-04-0805		PREDATOR CAB - BASE, 100"	1	KMEM
BA-04-0850		PREDATOR CAB - BASE - ALUMINUM CONSTRUCTION	1	KMEM
BA-04-0990		PREDATOR 100" - CRASH TESTING	1	KMEM
BA-04-0995		PREDATOR 100" - 120,000# ROOF & SIDE TESTING	1	KMEM
BA-04-1300		PREDATOR 100" - MFD CAB LENGTH (DIM - 62 1/2")	1	KMEM
BA-04-1900		PREDATOR 100" - VISTA DIMENSIONS FRONT SEATING & ENGINE ENCLOSURE	1	KMEM
BA-04-4510		2010 - RM 10" RAISED ROOF 4" CENTER NOTCH & 2" WATERWAY NOTCH	1	KMEM
BA-05-0260		BATTERY ACCESS DOORS - REAR STEP WELLS, EACH SIDE	1	KMEM
BA-05-0610		BARRIER HEIGHT CAB DOORS, 100" PREDATOR "MFD, LFD & X-LFD"	1	KMEM
BA-05-0650		CAST ANTI-SLIP ENTRY STEPS FOR REDUCED LENGTH CAB DOORS	1	KMEM
BA-05-0700		CAB DOORS - BOLT ON WEATHER STRIP	1	KMEM
BA-05-1015		PREDATOR DOOR LATCHES, HD LOOP STYLE LATCH - BARRIER HEIGHT DOORS	1	KMEM
BA-05-1035		LOCKING CAB DOOR , OUT + IN, LOOP STYLE LATCH	1	KMEM
BA-05-1037		KEY MODEL #2001	1	KMEM
BA-05-1103		WINDOWS, MANUAL HAND CRANK STYLE - 100"	1	KMEM
BA-05-1130		DOOR WINDOW TRIM EXTRUSION, 4 - DOOR	1	KMEM
BA-05-1310		UPPER INTERIOR DOOR PANELS - ABS, 4-DOOR	1	KMEM
BA-05-1410		BRUSHED ALUMINUM DOOR SCUFF PLATES, 4 - DOOR	1	KMEM
BA-05-1510		SCOTCHLITE MATERIAL ON INTERIOR OF DOOR PANEL 4-DOORS	1	KMEM
		****** HEADER - CAB EXTERIOR ACCESSORIES & OPT, 100" PREDATOR**	**1**	**KMEM**
BA-05-2410		WINDSHIELD, 100" PREDATOR CAB	1	KMEM
BA-05-2425		WINDSHIELD WIPERS & WASHERS - 100" PREDATOR	1	KMEM
BA-05-2450		SIDE VIEWING WINDOWS NON-SLIDING - PREDATOR	1	KMEM
BA-05-2500		DARK TINT WINDOWS, SIDE VIEWING, REAR DOORS & REAR WALL	1	KMEM
BA-05-2600		GRAB RAILS EXTERIOR, KNURLED ALUMINUM EXTRUSION	1	KMEM
BA-05-2668		PREDATOR INTERIOR GRAB HANDLES - WHEELABRATED	1	KMEM
BA-05-2692		INTERIOR "A" POST GRAB HANDLE "PREDATOR" - WHEELABRATED	1	KMEM
BA-05-2715		FRONT CAB GRILLE - FORMED STAINESS STEEL MIRROR FINISHED - 100" PREDATOR	1	KMEM
BA-05-2780		FRONT CAB GRILLE SCREEN - BLACK MESH - 100" PREDATOR/PANTHER	1	KMEM
BA-05-2815		SIDE CAB GRILLES - SHAPED BRIGHT FINISHED - 100" PREDATOR	1	KMEM
BA-05-2900		ALUMINUM CAB WHEEL LINERS	1	KMEM
BA-05-2910		ALUMINUM CAB FENDERETTES	1	KMEM
BA-05-3000		FRONT MUD FLAPS	1	KMEM
BA-05-3500		VELVAC MIRRORS " WEST COAST" HEATED / REMOTE - W/CONVEX SPOT	1	KMEM
BA-05-3690		MIRROR CONTROL IN MULTIPLEX CONTROL SCREEN	1	KMEM
BA-05-5115		INTERIOR TRIM, 100" PREDATOR	1	KMEM
BA-05-5180		CUSTOM CAB INTERIOR PAINT - TEXTURED GRAY	1	KMEM

PART NO	S	DESCRIPTION	QTY	ID
BA-05-5200		PREDATOR REAR INTERIOR CAB WALL, GRAY DURAWEAR UPHOLSTERY	1	KMEM
BA-05-5335		TREAD PLATE KICK PLATE ON LOWER INTERIOR REAR WALL	1	KMEM
BA-05-5530	>	STORAGE COMPARTMENTS UNDER FRONT SEATS - 100" PREDATOR	1	KMEM
BA-05-5610		BARYFOL FLOORING	1	KMEM
BA-05-5650		1" ACOUSTICAL INSULATION	1	KMEM
BA-05-5824		ENGINE ENCLOSURE 100" PREDATOR FAB DASH (DURAWEAR)	1	KMEM
BA-05-5860		ENGINE ENCLOSURE MATERIAL - ALUMINUM CAB	1	KMEM
BA-05-5890		REDUCED LENGTH ENGINE ENCLOSURE	1	KMEM
BA-05-7040		SUN VISORS, 100" PREDATOR CAB, PADDED VINYL	1	KMEM
BA-06-0400	>	DELETED - TOP ROLLOVER PROTECTION SYSTEM	1	KMEM
		****** HEADER - CAB SEATING & ACCESSORIES, 100" - PREDATOR MFD**	**1**	**KMEM**
	>	****** SEATING OPTIONS BOSTROM, 100" - PREDATOR - MFD - NON ROLLTEK**	**1**	**KMEM**
BA-06-3215		DRIVERS SEAT, BOSTROM SIERRA FX BUCKET, ABTS 2-WAY MECHANICAL	1	KMEM
BA-06-367J		OFFICERS SEAT, BOSTROM 550 SCBA, ABTS, FIXED	1	KMEM
BA-06-3910		ZICO ULLH SCBA BOTTLE BRACKET - OFFICER'S SEAT	1	KMEM
		MFD CAB - REAR FACING BOSTROM SEATS - NON ROLLTEK	**1**	**KMEM**
BA-06-4110		BOSTROM 450 SCBA ABTS REAR FACING, OUTBOARD, DS	1	KMEM
BA-06-4180		ZICO ULLH SCBA BOTTLE BRACKET - OUTBOARD, DS	1	KMEM
BA-06-4210		BOSTROM 450 SCBA ABTS REAR FACING, OUTBOARD, OS	1	KMEM
BA-06-4280		ZICO ULLH SCBA BOTTLE BRACKET - OUTBOARD, OS	1	KMEM
		MFD CAB - FORWARD FACING BOSTROM SEATS - NON ROLLTEK	**1**	**KMEM**
BA-06-7200		**** DELETE FORWARD FACING SEAT RISER - NOT REQUIRED	1	KMEM
BA-06-8005		BOSTROM SEATING MATERIAL, GRAY TWEED DURAWEAR	1	KMEM
BA-06-8055		NO SCBA PARADE COVERS SUPPLIED	1	KMEM
		****** HEADER - VEHICLE DATA RECORDER SYSTEMS**	**1**	**KMEM**
BA-06-9103	>	CLASS ONE SEAT BELT WARNING SYSTEM - UP TO 6 POSITIONS - ULTRAVIEW DISP	1	KMEM
BA-06-9115		FOUR (4) SEATING POSITIONS	1	KMEM
BA-06-9250	>	HELMET HOLDERS - IN CAB - ZICO	4	KMEM
BA-06-9310		CLASS ONE VEHICLE DATA RECORDER - MULTIPLEX	1	KMEM
		****** HEADER - CAB INTERIOR ACCESSORIES & OPTIONS, 100" PREDATOR**	**1**	**KMEM**
		****** HEADER - INSTRUMENTATION & CONTROLS, 100" PREDATOR - NARROW VISTA**	**1**	**KMEM**
BA-08-0214		DASH & CENTER CONSOLE - 100" PREDATOR FAB DASH (UPHOLSTERED)	1	KMEM
BA-08-0275		INSTRUMENT PANEL, 100" PREDATOR - NARROW	1	KMEM
BA-08-0315		DIESEL EXHAUST FLUID LEVEL GAUGE	1	KMEM
BA-08-0320		ENGINE COMPRESSION BRAKE CONTROLS	1	KMEM
BA-08-0620		ULTRAVIEW 450 DISPLAY ON CAB DASH FOR ES-KEY SYSTEM	1	KMEM
BA-08-1220		INDICATOR CLUSTER, 100" PREDATOR	1	KMEM
BA-08-1235		"ATC DISABLED" INDICATOR CLUSTER	1	KMEM
BA-08-1240		"ATC ACTIVE" INDICATOR CLUSTER	1	KMEM
BA-08-1265		"OUTRIGGERS NOT STOWED" INDICATOR ON DASH	1	KMEM
BA-08-1800		LOWER RIGHT AUXILIARY SWITCH PANEL - PREDATOR - FAB	1	KMEM
BA-08-1900		PUMP SHIFT CONTROL ON LOWER LEFT DASH PANEL	1	KMEM
BA-08-1950		MULTIPLEX CONTROL PUMP SHIFT SWITCH - MULTIPLEX	1	KMEM
BA-08-2000		AERIAL LADDER, LADDER POWER/PTO SWITCHES IN CAB	1	KMEM
BA-08-2750		PREDATOR COMPUTER TERMINAL IN FRONT OF OFFICER (FABRICATED)	1	KMEM
BA-08-2905		OVERHEAD ABS PANEL, FLAT FACED, 100" PREDATOR	1	KMEM
BA-08-4405		RM HEATER/ DEFROSTER & ACCESS, PREDATOR 10" RR W/TWO NOTCH	1	KMEM
BA-08-6900		HVAC CONTROL SYSTEM - INCOPORATED INTO MULTIPLEX CONTROL DISPLAY	1	KMEM
BA-08-9000		CAB TILT SYSTEM & OPTIONS	1	KMEM
BA-08-9110		PARKING BRAKE/CAB TILT INTERLOCK	1	KMEM
		FRAME & AXLE PACKAGE, SINGLE AXLE CHASSIS (HEAVY)	**1**	**KMEM**
BA-09-5100	>	110,000 PSI FRAME: STD MAIN RAIL WITH FULL LENGTH LINER	1	KMEM
		HEADER - FRONT BUMPER, EXTENSIONS & ACCESSORIES	**1**	**KMEM**
BA-10-0055	>	BUMPER 12" PAINTED STEEL BUMPER - ALL CABS	1	KMEM
BA-10-0100	>	6" FRONT BUMPER EXTENSION WITH TREAD PLATE GRAVEL SHIELD	1	KMEM
BA-10-0405		TREADPLATE GRAVEL SHIELD STANDARD INSTALLATION	1	KMEM
BA-10-2010		TWO (2) PAINTED TOW HOOKS BELOW FRONT BUMPER	1	KMEM

PART NO	S	DESCRIPTION	QTY	ID
BA-10-5000		AERIAL TRAVEL SUPPORT FOR ANY REAR MOUNT TYPE AERIAL	1	KMEM
BA-14-0170		23,000# FRONT AXLE MERITOR MFS-20-133A-N	1	KMEM
BA-14-1110		MERITOR, EX-225 17" DISC BRAKES, FRONT AXLE, W/ AUTO SLACK ADJUSTMENT	1	KMEM
BA-14-2040		SUSPENSION FRONT - 23,000# AXLES	1	KMEM
BA-14-2095		**AERIAL DEVICE TRAVEL HEIGHT CRITICAL!!!! ** REQUIRES SMALL AXLE SPACER	1	KMEM
BA-14-2110		FRONT AXLE SHOCK ABSORBERS - MONROE "MAGNUM - 70"	1	KMEM
BA-14-5150		33,500# REAR AXLE MERITOR RS-30-185	1	KMEM
BA-14-6515		16.5" X 8.6" S-CAM BRAKES - MERITOR REAR AXLE, W/ AUTO SLACK	1	KMEM
BA-15-2810		VEHICLE TOP SPEED - 2016 NFPA STATEMENT	1	KMEM
BA-15-4435	>	SPRING REAR SUSPENSION, SINGLE REAR AXLE (33,500#)	1	KMEM
BA-15-4900	>	REAR SHOCK ABSORBERS - MONROE "MAGNUM" SERIES	1	KMEM
		****** HEADER - BRAKE SYSTEM, SINGLE AXLE VEHICLE**	**1**	**KMEM**
BA-20-1000		BRAKE SYSTEM, SA CHASSIS	1	KMEM
BA-20-1100		ABS BRAKING FOR SINGLE REAR AXLE CHASSIS	1	KMEM
BA-20-1270	>	ELECTRONIC STABILITY CONTROL (ESC) WITH (ATC) - CUSTOM SA	1	KMEM
BA-20-1500		AIR RESERVOIRS 4700 CU IN SA, BASE	1	KMEM
BA-20-2025		1/4 TURN DRAIN VALVES ON ALL AIR TANKS	1	KMEM
BA-20-3010		ROCKWELL/WABCO SYSTEM SAVER #1200, AIR DRYER HEATED	1	KMEM
BA-20-5000		COLOR CODED SYNFLEX BRAKE LINES W/QUICK RELEASE FITTINGS - SA	1	KMEM
BA-20-5500		AIR COMPRESSOR -WABCO 18.7 CFM- STD. FOR ALL CUMMINS ENGINES	1	KMEM
BA-20-5810		BRAKE TREADLE VALVE	1	KMEM
BA-20-6010		PARKING BRAKE CONTROL - NEAR DRIVER - ALL WHEEL LOCK	1	KMEM
		HEADER, TIRE AND WHEEL OPTIONS	**1**	**KMEM**
		HEADER, WHEELS, 23,000 FRONT AXLE - ALUMINUM	**1**	**KMEM**
BA-25-1040		FRONT WHEELS, POLISHED ALUMINUM, 22.5 X 13, 24,390#	1	KMEM
BA-25-1045		FRONT WHEELS, LUG AND HUB TRIM (ALUMINUM WHEELS)	1	KMEM
BA-25-2030	>	FRONT, GOODYEAR 425/65R22.5 L 24,400# G296 MSA MIXED - 68MPH	1	KMEM
BA-25-2400		GOODYEAR - FIRE SERVICE RATING - TIRE RESTRICTIONS	1	KMEM
		HEADER, TIRES & WHEELS, 33,000 - 33,500 SINGLE REAR AXLE	**1**	**KMEM**
BA-25-5010	>	REAR WHEELS, STEEL DISC TYPE, 22.5 X 9, SA	1	KMEM
BA-25-5052		REAR WHEELS, NO LUG AND HUB TRIM PROVIDED (STEEL)	1	KMEM
BA-25-6080	>	REAR, GDYR 315/80R22.5 L 35,400# G291 HIGHWAY - 68MPH, SA	1	KMEM
BA-25-7400		GOODYEAR - FIRE SERVICE RATING - TIRE RESTRICTIONS	1	KMEM
BA-25-9900		TIRE PRESSURE MONITORING - LED VALVE STEM CAPS - SIX TIRES	1	KMEM
		100" PREDATOR - ENGINE PACKAGE, SINGLE AXLE CHASSIS	**1**	**KMEM**
		****** 100" - HEADER, ENGINE & ENGINE COMPONENTS**	**1**	**KMEM**
BA-30-3080	>	CUMMINS ISL9 350 HP @ 2000 RPM, TQ 1000 lb-ft @ 1400 - PREDATOR NARROW	1	KMEM
BA-30-9810		PROPOSED - ENGINE CERTIFICATION CUSTOM CHASSIS	1	KMEM
BA-32-0035		COOLING/RADIATOR, 100" PREDATOR - NARROW	1	KMEM
BA-32-0070		ENGINE COOLANT FILTER - CUMMINS ISC - ISX	1	KMEM
BA-32-0085		COOLING SYSTEM CRITERIA	1	KMEM
BA-32-0100		TRANSMISSION COOLER	1	KMEM
BA-32-0120		RADIATOR SKID PLATE	1	KMEM
BA-32-0160		CHARGED AIR COOLER (FRONT MOUNT)	1	KMEM
BA-32-0240		COOLANT FAN, W/CLUTCH - CUMMINS ISC/ISL	1	KMEM
BA-32-0340		HEATER AND COOLANT HOSES/PIPING	1	KMEM
BA-32-0420		LOW COOLANT INDICATOR LIGHT AND ALARM IN CAB	1	KMEM
BA-33-0020	>	SECONDARY BRAKING - ENGINE COMPRESSION BRAKE	1	KMEM
BA-33-0150		FAST IDLE CONTROL FOR ALL ELECTRONIC ENGINES - SMART WHEEL	1	KMEM
BA-33-0160		ENGINE AIR CLEANER	1	KMEM
BA-33-0180		SPARK ARRESTOR	1	KMEM
BA-33-0200		ACCELERATOR PEDAL - FLOOR MOUNT	1	KMEM
BA-33-0250		REMOTE THROTTLE & INTERLOCK HARNESS	1	KMEM
BA-40-0100		ALLISON 3000EVS TRANS. - COMPRESSION BRAKE	1	KMEM
BA-40-0650		FIVE (5) SPEED AUTOMATIC TRANSMISSION - 3000 SERIES	1	KMEM
BA-40-0700		ALLISON TRANSMISSIONS, ELECTRONIC TOUCH PAD SHIFTER IN CAB	1	KMEM
BA-40-0855		TRANSMISSION OIL LEVEL SENSOR	1	KMEM

PART NO	S	DESCRIPTION	QTY	ID
BA-40-0860		ALLISON PARK TO NEUTRAL	1	KMEM
BA-40-0910		ALLISON PRESELECT PROGRAMMING	1	KMEM
BA-40-0920		PRESELECT PROGRAMMED FOR 4TH GEAR	1	KMEM
BA-40-4710		TES-389 TRANS FLUID 3000EVS TRANSMISSION	1	KMEM
BA-45-0100		DRIVE LINES DANA-SPICER #1710 SERIES	1	KMEM
BA-49-0100		DIESEL EXHAUST FLUID TANK - 5 GALLON	1	KMEM
BA-50-0110		EXHAUST SYSTEM - DPF & SCR SYSTEM - INLINE SYSTEM	1	KMEM
BA-50-0155		ALUMINIZED STEEL EXHAUST TAILPIPE/OUTLET OS - DPF + SCR SYSTEM	1	KMEM
BA-50-2500		FUEL SYSTEM	1	KMEM
BA-50-2505		FUEL TANK - 50 GALLON, STEEL	1	KMEM
BA-50-2625		FUEL LINES - FIBER REINFORCED HOSE	1	KMEM
BA-50-2645	>	CUMMINS FUEL-WATER SEPARATOR	1	KMEM
BA-50-2670		FUEL PUMP SECONDARY ELECTRIC, REQ. ON 210" W-B OR LONGER	1	KMEM
BA-50-2700		FUEL POCKET, LEFT SIDE REAR WHEEL WELL PANEL	1	KMEM
BA-50-5050	>	STEERING - DUAL SHEPPARD POWER STEERING GEARS	1	KMEM
BA-50-7115		STEERING COLUMN - CLOCK SPRING "NARROW"	1	KMEM
BA-50-7155		18" STEERING WHEEL - 4 SPOKE - "NARROW"	1	KMEM
BA-50-9000		ROAD SAFETY KITS	1	KMEM
		****** HEADER, RM LADDER CHASSIS ELECTRICAL, 100" PREDATOR (OPTIONS)**	**1**	**KMEM**
		****** HEADER, RM LADDER W/ PUMP BODY ELECTRICAL (OPTIONS)**	**1**	**KMEM**
BE-01-0005		PREDATOR CHASSIS ELECTRICAL SYSTEM DESCRIPTION	1	KMEM
BE-01-0105		PREDATOR CHASSIS WIRING INSTALLATION	1	KMEM
BE-01-0150		DIRECT BATTERY GROUNDING STRAP - PREDATOR	1	KMEM
BE-01-0153		EMI/RFI PROTECTION	1	KMEM
BE-01-0205		PREDATOR 12 VOLT ELECTRICAL SYSTEM TESTING	1	KMEM
BE-05-0353		CLASS-1 ES-KEY MULTI-PLEXED ELECTRICAL SYSTEM 100" PREDATOR	1	KMEM
BE-05-0450		CLASS-1 ES-KEY ULTRAVIEW 450 DISPLAY	1	KMEM
BE-05-0800		INTER-LOCK MODULE FOR MULTIPLEX SYSTEM	1	KMEM
BE-05-0900		CHASSIS DIAGNOSTICS SYSTEM	1	KMEM
BE-05-1160		VOLTAGE MONITORING SYSTEM - 12 VOLT	1	KMEM
BE-05-1165		INDICATOR LIGHT AND ALARM PROVE-OUT SYSTEM	1	KMEM
BE-05-1170		SEQUENCER	1	KMEM
BE-05-1175		ELECTRICAL HARNESS INSTALLATION - 12 VOLT	1	KMEM
BE-10-0487		DELCO REMY 40SI, 320 AMP BRUSHLESS ALTERNATOR	1	KMEM
BE-15-0680		BATTERIES - FIVE (5) EXIDE GROUP 31, 925CCA	1	KMEM
BE-15-1105		PREDATOR BATTERY STORAGE, STEEL, MFD, XMFD, LFD, XLFD	1	KMEM
BE-15-1500		BATTERY DISCONNECT SWITCH, ALL UNITS	1	KMEM
BE-15-1555		COLE HERSEE BATTERY JUMPER STUDS, DS BATTERY BOX	1	KMEM
BE-20-1600		12 VOLT POLARIZED CHARGE RECEPTACLE	1	KMEM
BE-20-1715		SHORELINE RECEPTACLE LABEL - NFPA	1	KMEM
BE-20-1750		SHORELINE LOCATION - ADJACENT TO DRIVER'S DOOR	1	KMEM
BE-30-0100		CONTROL SWITCHING - EATON MULTIPLEX SWITCHES - 12 ABOVE DRIVER	1	KMEM
BE-30-0120		CONTROL SWITCHING - EATON MULTIPLEX SWITCHES - 9 LOWER PANEL	1	KMEM
BE-30-2500		CONTROL SWITCHING LABELING	1	KMEM
BF-00-0505		WELDON #8080-0000-13 WHITE/RED HALOGEN INTERIOR LIGHTS (4)	1	KMEM
BF-00-5000		DOOR OPEN INDICATOR W/ INTEGRAL AUDIBLE ALARM	1	KMEM
		****** HEADER, 12V POWER/ USB CHARGING/ POWER - GROUND CIRCUITS, CUSTOM ******	**1**	**KMEM**
BF-01-6000		12 VOLT POWER AND GROUND CIRCUIT FOR ACCESSORIES IN DASH	1	KMEM
		****** HEADER, REAR/SIDE VISION CAMERA SYSTEMS ******	**1**	**KMEM**
BF-20-0000		DUAL HEADLIGHTS, HALOGEN, PREDATOR - DUAL BEZELS	1	KMEM
BF-20-0320		DAYTIME RUNNING LIGHTS, ALL CABS	1	KMEM
BG-00-0055		DUAL MODULE w/ CODE 3 65STA LED TURN SIGNAL & REQ WARN LIGHT	1	KMEM
BG-00-0400		CUST RM LADDER CHASSIS LED MARKER LIGHTS	1	KMEM
BG-00-0500		CUST RM LADDER BODY LED MARKER LIGHTS	1	KMEM
BG-00-1210		WELDON #9186 LED MARKER LIGHTS @ FRONT ROOF EDGE OF CAB	1	KMEM
BG-00-1600		TRUCK-LITE MARKER LIGHTS @ EA SIDE OF CAB, ADJACENT TO DRIVER DOOR	1	KMEM
BG-00-1610		TRUCK-LITE MARKER/TURN LIGHTS @ EA SIDE OF BODY	1	KMEM

PART NO	S	DESCRIPTION	QTY	ID
BG-00-1660		TRUCK-LITE MARKER LIGHTS @ REAR OF BODY	1	KMEM
BG-00-1800		TRUCK-LITE DOT AMBER REFLECTORS @ SIDE OF BODY	1	KMEM
BG-00-1810		TRUCK-LITE DOT RED REFLECTORS @ REAR OF BODY	1	KMEM
BG-00-2915		TECNIQ #L10 LED LICENSE PLATE LIGHT @ DS REAR OF BODY	1	KMEM
BG-02-1515		WELDON #3884 LED BRAKE, REVERSE, & TURN, W/ TRI HOUSING	1	KMEM
BH-04-1050		CAB STEP LIGHTS, TECNIQ EON 3 LED, ALL DEVICES	4	KMEM
BH-04-1130		BODY STEP LIGHTS, TECNIQ EON 3 LED, ALL DEVICES	4	KMEM
BH-05-1625		DUNNAGE AREA LIGHTING, TECNIQ EON 3 LED	1	KMEM
BH-05-2300		AERIAL ACCESS LADDER ILLUMINATION - WHELEN 3" LED - RM BODY	1	KMEM
	>	****** HEADER, HOSE BED LIGHTING ******	**1**	**KMEM**
BH-06-0100		UNITY HOSE BED LIGHTS, ALL DEVICES	1	KMEM
BH-06-2200		HOSE BED WORK LIGHT - SWITCH	1	KMEM
		****** HEADER, SCENE LIGHTS - CUSTOM CHASSIS ******	**1**	**KMEM**
		****** HEADER, SCENE LIGHTS - LADDER/PLATFORM W/ PUMP**	**1**	**KMEM**
BH-11-0500		NFPA (4) JW SPEAKER LED RECTANGLE GROUND LIGHTS, BELOW CAB DOORS	1	KMEM
BH-11-0560		GROUND LIGHTS, 2 LED BELOW PUMP PANEL RUNNING BOARD - RH	1	KMEM
BH-11-0585		GROUND LIGHTS, 2 LED, AT REAR BODY CORNERS - RH	1	KMEM
		****** HEADER, BROW AND CAB RADIUS LIGHTS - CUSTOM CHASSIS**	**1**	**KMEM**
		****** HEADER, TELESCOPING LIGHTS, REAR OF CAB - CUSTOM CHASSIS**	**1**	**KMEM**
BI-00-0200		AERIAL BODY ELECTRICAL SYSTEM	1	KMEM
BI-00-0205		AERIAL BODY ELECTRICAL JUNCTION COMPARTMENT	1	KMEM
BI-00-0210		REAR-MOUNT, AERIAL DEVICE ELECTRICAL JUNCTION COMPARTMENT	1	KMEM
BI-00-0525		BODY ELECTRICAL HARNESS - ES-KEY	1	KMEM
BJ-00-5115		PUMP ENCLOSURE WORK LIGHTS - TECNIQ LED	1	KMEM
BJ-00-5165		ENGINE COMPARTMENT WORK LIGHTS - TECNIQ LED	1	KMEM
		COMPARTMENT LIGHTS - AERIAL SINGLE AXLE	**1**	**KMEM**
BJ-02-1055	>	COMPT. LIGHTS, TECNIQ E18 LED	7	KMEM
		****** HEADER, 12V BODY FLOOD LIGHTING - RM LAD/PLAT/WT W/ PUMP ******	**1**	**KMEM**
		****** CUSTOM REAR MOUNT AERIAL NFPA WARNING LIGHT PACKAGE**	**1**	**KMEM**
BL-95-0000		NFPA COMPLIANT WARNING LIGHT PACKAGE - ALL UNITS	1	KMEM
BL-95-0100		LIGHT PACKAGE ACTUATION/CONTROLS - ALL UNITS	1	KMEM
BL-98-0000		WARNING LIGHT FLASH PATTERN - NFPA FLASH PATTERN	1	KMEM
BM-00-0200		CODE 3 UPPER PACKAGE - CUSTOM REAR MOUNT AERIAL	1	KMEM
BM-02-0072		A-UPPER, CODE 3 LED 2718NFPA1, RX 2700 18" PRIZM II BAR PAIR	1	KMEM
BM-02-1000		C-UPPER, CODE 3 HALOGEN 550 BEACONS, RED DRIVER, AMBER OFFICER	1	KMEM
BM-02-2000		B/D-UPPER REAR, COVERED BY LIGHTS IN ZONE C-UPPER	1	KMEM
BM-02-3000		B/D-UPPER FRONT, COVERED BY LIGHTS IN ZONE A-UPPER	1	KMEM
BM-07-0200		CODE 3 LOWER PACKAGE - CUSTOM REAR MOUNT AERIAL	1	KMEM
BM-09-0018	>	A-LOWER FRONT, CODE 3 65 SERIES LED	1	KMEM
BM-09-0098		A-LOWER FRONT MOUNTING, CUSTOM CHASSIS	1	KMEM
BM-09-1014	>	C-LOWER REAR, CODE 3 65 SERIES LED	1	KMEM
BM-09-2006	>	B/D-LOWER FRONT, CODE 3 65 SERIES LED	1	KMEM
BM-09-2098		B/D-LOWER FRONT MOUNTING, CUSTOM CHASSIS	1	KMEM
BM-09-3006	>	B/D-LOWER MID, CODE 3 65 SERIES LED	1	KMEM
BM-09-3506	>	B/D-LOWER SECONDARY MID, CODE 3 65 SERIES LED	1	KMEM
BM-09-4006	>	B/D-LOWER REAR, CODE 3 65 SERIES LED	1	KMEM
BM-15-0000		LIGHT PACKAGE NFPA CERTIFICATION - ALL UNITS	1	KMEM
		****** HEADER, OPTIONAL WARNING LIGHTS**	**1**	**KMEM**
		****** HEADER, AUDIBLE WARNING & COMMUNICATION EQUIPMENT**	**1**	**KMEM**
BW-00-0510		CHASSIS SINGLE ELECTRIC (DOT) HORN	1	KMEM
BW-00-0560		CODE 3, #CA278, BACK-UP ALARM - 87DBA	1	KMEM
BW-00-5000	>	DUAL CHROME AIR HORNS	1	KMEM
BW-00-5100		DUAL AIR HORNS RECESSED IN FRONT BUMPER, STD	1	KMEM
BW-00-5200		AIR HORN CTRL - FOOT FOR OFFICER & STEERING WHEEL FOR DRIVER	1	KMEM
BW-01-0120		SIREN, WHELEN # 295HFS2, 100W - FLUSH MOUNT	1	KMEM
BW-01-1020		ONE (1) WHELEN SA315P SPEAKER	1	KMEM
		****** HEADER, PUMP, TANK & ACCESSORIES, 79' SA RM, X-HI-BODY**	**1**	**KMEM**
DC-00-2330		WATEROUS CSU-C20-1250 SINGLE STAGE PUMP	1	KMEM
DC-01-4600		WATEROUS PUMP PACKING	1	KMEM

PART NO	S	DESCRIPTION	QTY	ID
DC-01-6210		WATEROUS "C20" PUMP DRIVE UNIT, ALL WATEROUS MID-SHIP PUMPS	1	KMEM
DC-01-6490		PUMP RATIO (HALE, WATEROUS OR DARLEY)	1	KMEM
DC-01-7140		WATEROUS AIR SHIFT	1	KMEM
DC-01-8590		PUMP SHIFT MANUAL OVERRIDE (HALE, WATEROUS OR DARLEY)	1	KMEM
DC-01-8615		WATEROUS PUMP SHIFT INDICATOR LIGHTS	1	KMEM
DC-01-9020		TRANSMISSION LOCK-UP (HALE, WATEROUS OR DARLEY)	1	KMEM
DC-02-1900		PUMP MOUNTS - MID-SHIP PUMPS	1	KMEM
DC-02-1990		PUMP INSTALLATION - CUSTOM	1	KMEM
		****** HEADER, WATEROUS CSU, CMU, PRESSURE CONTROL**	**1**	**KMEM**
DC-05-1215	>	CLASS ONE "TPG" GOVERNOR CONTROL	1	KMEM
DC-05-1295		TASK FORCE TIPS #A18 SERIES INTAKE RELIEF VALVE	1	KMEM
DC-05-2500		PUMP UL CERTIFICATION - 750 GPM & UP	1	KMEM
		WATEROUS, PUMP PRIMING PUMP AND CONTROLS	**1**	**KMEM**
DC-05-3680	>	TRIDENT "MANUAL" AIR PRIMING SYSTEM	1	KMEM
		WATEROUS, DRAINS & ACCESSORES	**1**	**KMEM**
DC-05-5110		ROTARY MASTER DRAIN VALVE	1	KMEM
DC-05-5400		DRAINS/BLEEDER "INNOVATIVE CONTROLS" LIFT UP @ ALL 1-1/2" OR LARGER	1	KMEM
DC-05-5500		SYNFLEX SUCTION, DISCHARGE, PRESSURE AND CONTROL LINES	1	KMEM
DC-05-6220		WATEROUS ANODE BLOCKS - 2 TOTAL	1	KMEM
DC-10-2001		SIDE MOUNT PUMP MODULE, SA, RM AERIAL	1	KMEM
DC-10-2500		PUMP MODULE - STEEL CONSTRUCTION	1	KMEM
		****** HEADER, SUCTIONS - REARMOUNT SA, SIDE MOUNT**	**1**	**KMEM**
DC-14-3200		WATEROUS MAIN SUCTION INLETS 6" NST, 1250 GPM CSU PUMP	1	KMEM
DC-14-5300		SHORT NECK MAIN PUMP SUCTION INLETS - DS & OS	1	KMEM
DC-14-5560	>	6" NST MAIN PUMP SUCTION PRESSURE VENTED CAPS (2)	1	KMEM
		HEADER - AUXILIARY SUCTION/S - AERIALS	**1**	**KMEM**
DC-20-1000		2 1/2" AUX. SIDE SUCTION @ DS PANEL TO REAR OF MAIN INLET	1	KMEM
DC-20-1100		2 1/2" AKRON #8800 S.S. BALL VALVE, DS REAR AUX SUCTION	1	KMEM
DC-20-1200		SWING CONTROL @ VALVE, DS REAR AUX SUCTION	1	KMEM
DC-20-9500		BEHIND PANEL MOUNT	1	KMEM
		****** HEADER - TANK TO PUMP - MD REARMOUNTS**	**1**	**KMEM**
DC-25-1200		TANK TO PUMP - 3" VALVE - LADDERS & PLATFORMS	1	KMEM
DC-25-3110		3" AKRON #8800 SERIES - S.S. BALL, VALVE , TANK TO PUMP	1	KMEM
DC-25-5110		3" PUSH/PULL CONTROL FOR TANK TO PUMP	1	KMEM
		****** HEADER - TANK FILL - MD REARMOUNT**	**1**	**KMEM**
DC-30-2100		TANK FILL LINE 2" FROM PUMP - SIDE MOUNT	1	KMEM
DC-30-2300		2" AKRON #8800 SERIES - S.S. BALL TANK FILL, SIDE MOUN	1	KMEM
DC-30-6500		PUSH/PULL CONTROL FOR TANK FILL	1	KMEM
		****** DISCHARGES & ACCESSORIES, RM-SA-MD AERIAL - SIDE MOUNT**	**1**	**KMEM**
		DRIVER'S SIDE #1 MAIN DISCHARGE	**1**	**KMEM**
DC-35-0010		DS MAIN DISCHARGE #1 - SIDE MOUNT	1	KMEM
DC-35-0110		2 1/2" AKRON #8800 SERIES - S.S. BALL, DS #1, SIDE MOUNT	1	KMEM
DC-35-1815		DS #1 DISCH - 2 1/2" STRAIGHT NST & 30-DEGREE NST ELBOW	1	KMEM
DC-35-2010		2 1/2" NST PRESSURE VENTED CAP - DS DISCHARGE #1	1	KMEM
DC-35-2410		PUSH/PULL CONTROL FOR DS DISCHARGE #1 -SIDE MOUNT	1	KMEM
DC-35-3110		INNOVATIVE CONTROLS LIQUID FILLED 2 1/2" PRESS GAUGE SS- DS DISCHARGE #1	1	KMEM
		DRIVER'S SIDE #2 MAIN DISCHARGE	**1**	**KMEM**
DC-35-5010		DS MAIN DISCHARGE #2 - SIDE MOUNT	1	KMEM
DC-35-5110		2 1/2" AKRON #8800 SERIES - S.S. BALL, DS #2, SIDE MOUNT	1	KMEM
DC-35-6815		DS #2 DISCH - 2 1/2" STRAIGHT NST & 30-DEGREE NST ELBOW	1	KMEM
DC-35-7010		2 1/2" NST PRESSURE VENTED CAP - DS DISCHARGE #2	1	KMEM
DC-35-7410		PUSH/PULL CONTROL FOR DS DISCHARGE #2 -SIDE MOUNT	1	KMEM
DC-35-8110		INNOVATIVE CONTROLS LIQUID FILLED 2 1/2" PRESS GAUGE SS- DS DISCHARGE #2	1	KMEM
		OFFICER'S SIDE #1 MAIN DISCHARGE	**1**	**KMEM**
DC-39-0010	>	OS MAIN DISCHARGE #1 - SIDE MOUNT	1	KMEM
DC-39-0110		2 1/2" AKRON #8800 SERIES - S.S. BALL, OS #1, SIDE MOUNT	1	KMEM
DC-39-1815		OS #1 DISCH - 2 1/2" STRAIGHT NST & 30-DEGREE NST ELBOW	1	KMEM

PART NO	S	DESCRIPTION	QTY	ID
DC-39-2010		2 1/2" NST PRESSURE VENTED CAP - OS DISCHARGE #1	1	KMEM
DC-39-2410		PUSH/PULL CONTROL FOR OS DISCHARGE #1 -SIDE MOUNT	1	KMEM
DC-39-3110		INNOVATIVE CONTROLS LIQUID FILLED 2 1/2" PRESS GAUGE SS- OS DISCHARGE #1	1	KMEM
		OFFICER'S SIDE #2 MAIN DISCHARGE	**1**	**KMEM**
DC-39-5010	>	OS MAIN DISCHARGE #2 - SIDE MOUNT	1	KMEM
DC-39-5080	>	**** WATEROUS PUMP LDH DISCHARGE PORT ****	1	KMEM
DC-39-5110		2 1/2" AKRON #8800 SERIES - S.S. BALL, OS #2, SIDE MOUNT	1	KMEM
DC-39-6815		OS #2 DISCH - 2 1/2" STRAIGHT NST & 30-DEGREE NST ELBOW	1	KMEM
DC-39-7010		2 1/2" NST PRESSURE VENTED CAP - OS DISCHARGE #2	1	KMEM
DC-39-7410		PUSH/PULL CONTROL FOR OS DISCHARGE #2 -SIDE MOUNT	1	KMEM
DC-39-8110		INNOVATIVE CONTROLS LIQUID FILLED 2 1/2" PRESS GAUGE SS- OS DISCHARGE #2	1	KMEM
		CROSSLAY #1 DISCHARGE	**1**	**KMEM**
DC-47-0400		CROSSLAY #1, 1 1/2" - AERIAL	1	KMEM
DC-47-1110		CROSSLAY #1 CAPACITY - 200' OF 1 3/4" HOSE	1	KMEM
DC-47-1410		CROSSLAY #1 - DOUBLE STACK HOSE DESIGN	1	KMEM
DC-47-1510		1 1/2" NST CHICKSAN SWIVEL - CROSSLAY #1	1	KMEM
DC-47-2110		CROSSLAY #1, PLUMBING, 2" STAINLESS STEEL PIPING	1	KMEM
DC-47-2210		2" AKRON #8800 SERIES - S.S. BALL, VALVE CROSSLAY #1, DISCH	1	KMEM
DC-47-2610		PUSH/PULL 1/4 TURN CONTROL CROSSLAY #1	1	KMEM
DC-47-3210		INNOVATIVE CONTROLS LIQUID FILLED 2 1/2" PRESS GAUGE SS - CROSSLAY #1	1	KMEM
		CROSSLAY #2 DISCHARGE	**1**	**KMEM**
DC-47-5400		CROSSLAY #2, 1 1/2" - AERIAL	1	KMEM
DC-47-6110		CROSSLAY #2 CAPACITY - 200' OF 1 3/4" HOSE	1	KMEM
DC-47-6410		CROSSLAY #2 - DOUBLE STACK HOSE DESIGN	1	KMEM
DC-47-6510		1 1/2" NST CHICKSAN SWIVEL - CROSSLAY #2	1	KMEM
DC-47-7110		CROSSLAY #2, PLUMBING, 2" STAINLESS STEEL PIPING	1	KMEM
DC-47-7210		2" AKRON #8800 SERIES - S.S. BALL, VALVE CROSSLAY #2,	1	KMEM
DC-47-7610		PUSH/PULL 1/4 TURN CONTROL CROSSLAY #2	1	KMEM
DC-47-8210		INNOVATIVE CONTROLS LIQUID FILLED 2 1/2" PRESS GAUGE SS - CROSSLAY #2	1	KMEM
		CROSSLAY & SPEEDLAY OPTIONS - RM AERIAL	**1**	**KMEM**
DC-50-7015	>	VINYL CROSS LAY COVER	1	KMEM
DC-50-7030		CROSSLAY COVER RED IN COLOR	1	KMEM
	>	**WATERWAY DISCHARGE**	**1**	**KMEM**
DC-62-0210		AERIAL WATERWAY DISCHARGE - SA-RM AERIAL	1	KMEM
DC-62-1130		WATERWAY DISCHARGE, PLUMBING, 4" STAINLESS STEEL - RM	1	KMEM
DC-62-1230		3" AKRON #8800 SERIES - S.S. BALL, VALVE WATERWAY	1	KMEM
DC-62-1610		PUSH/PULL 1/4 TURN CONTROL FOR WATERWAY	1	KMEM
DC-62-2210		INNOVATIVE CONTROLS LIQUID FILLED 2 1/2" PRESS GAUGE SS - WATERWAY	1	KMEM
		PUMP PANELS & ACCESSORIES	**1**	**KMEM**
DD-65-0505		SIDE MOUNT PUMP PANEL - RM AERIAL	1	KMEM
DD-65-4115		SIDE MOUNT PANELS - 12 GAUGE BRUSHED STAINLESS STEEL	1	KMEM
DD-65-4710		VERTICALLY HINGED GAUGE PANEL - SIDE MOUNT	1	KMEM
DD-65-4810		OFFICER SIDE VERTICALLY HINGED PUMP ACCESS DOOR - SIDE MOUNT	1	KMEM
DD-65-5150		PANEL FASTENERS	1	KMEM
DD-65-5510		CAPS AND ADAPTERS SAFETY TETHER - BALL CHAIN	1	KMEM
DD-65-8820		PUMP PANEL DISCH./SUCTION TRIM PLATES, HIGH POLISHED	1	KMEM
DD-65-9000		DISCHARGE GAUGE TRIM BEZELS	1	KMEM
DD-65-9110		IDENTIFICATION PLATES	1	KMEM
DD-66-0100		PUMP OPERATOR'S PANEL LIGHT SHIELD	1	KMEM
DD-66-0135		TECNIQ E18 LED LIGHTS - LIGHT SHIELD	1	KMEM
DD-66-2100		OS PUMP PANEL LIGHTING	1	KMEM
DD-66-2130		TECNIQ EON 3 LED LIGHTS - OS PUMP PANEL	1	KMEM
		PUMP OPERATOR'S PANEL - SIDE MOUNT, AERIAL	**1**	**KMEM**
DD-70-2331		CLASS ONE "TPG" PRESSURE GOVERNOR CONTROL @ PANEL	1	KMEM
DD-70-2410		PUMP PRESSURE & VACUUM TEST PORTS @ PANEL	1	KMEM

PART NO	S	DESCRIPTION	QTY	ID
DD-70-4120		MASTER PRESSURE & COMPOUND GAUGES - 4" NOMINAL GAUGES	1	KMEM
DD-70-4220		4" INNOVATIVE CONTROLS MASTER PRESSURE AND COMPOUND GAUGES	1	KMEM
DD-70-4680		PRESSURE & COMPOUND GAUGE RANGES - SINGLE STAGE	1	KMEM
DD-70-4900		AUXILIARY ENGINE COOLER	1	KMEM
		WATER TANK LEVEL GAUGE - AERIAL	**1**	**KMEM**
DD-72-0410		FIRE RES - TANK VISION #WLA300-A00 LED WATER TANK GAUGE - PRIMARY	1	KMEM
DD-72-1300	>	FIRE RES WATER LEVEL - 1/4" NPT PRESS TRANS @ BOTTOM TANK	1	KMEM
DD-80-0110		SLIDE-OUT STEP @ DRIVER'S PUMP OPERATOR'S PANEL	1	KMEM
DE-00-1000	>	**** HEADER, 75-79' SA, WATER TANK	1	KMEM
		WATER TANKS/OPTIONS AERIALS	**1**	**KMEM**
DE-05-1500	>	UPF POLYIIE TANK, 250 GAL. - AERIAL	1	KMEM
DE-05-6000		TANK DESCRIPT, CONSTR AND MOUNT, UPF POLY IIE TANK	1	KMEM
JA-00-0100		BODY AND COMPARTMENT HEADER (ALL AERIAL DEVICES)	1	KMEM
JA-00-5000		GEN. 3/16" ALUM BODY DESCRIPTION FOR REAR MOUNT AERIALS 79 SA	1	KMEM
TF-02-1060		COMPARTMENTATION, 79SA STYLE #4H-HI "STRAIGHT SHOT"	1	KMEM
		****** HEADER, 79-SA BODY OPTIONS (WITH PUMP)**	**1**	**KMEM**
TF-10-0100		BEVELED OVERLAPPING DOORS, ALL COMPARTMENTS, ALL DEVICES	1	KMEM
TF-10-1900		BRUSHED FINISHED DOOR PANS - 2" THICK DOORS	1	KMEM
TF-10-2700		DOOR HINGE FOR BEVELED OVERLAPPING HINGED DOORS	1	KMEM
TF-10-2800		DOOR SEAL FOR BEVELED OVERLAPPING HINGED DOORS	1	KMEM
TF-10-2940		ROTARY LATCHES WITH D-RING HANDLES	1	KMEM
TF-10-3150		GAS SHOCK ON HORIZONTALLY & VERTICALLY HINGED DOORS	1	KMEM
TF-10-6000		COMPARTMENT FLOORS (AERIALS ONLY)	1	KMEM
TF-11-0500		COMPARTMENT GENERAL DESCRIPTION, ALL LADDERS & PLATFORMS	1	KMEM
TF-11-1441		PAINTED REAR BODY PANEL, RM	1	KMEM
TF-11-2200		STAINLESS STEEL OUTRIGGER COVER PANEL, TWO RIGGER DEVICES	1	KMEM
TF-11-3045		BODY RUB RAILS, C-CHANNEL	1	KMEM
TF-12-1000		RUNNING BOARD STEPS (AERIALS ONLY)	1	KMEM
TF-13-3010		REAR TURNTABLE ACCESS LADDER FRAMEWORK (SS) 75/100 SA/TA	1	KMEM
TF-13-3115		REAR MOUNT, TURNTABLE PULL/DROP STEPS, DS REAR (HD-S/S)	1	KMEM
TF-13-5010		REAR-MOUNTS, "STRAIGHT SHOT" EXTRUDED ALUMINUM BODY HANDRAILS	1	KMEM
TF-14-1000		ALUMINUM WHEEL WELL LINERS	1	KMEM
TF-14-1700		POLISHED ALUMINUM FENDERETTES, SINGLE AXLE BODIES	1	KMEM
TF-14-5000		REAR MUD FLAPS	1	KMEM
TF-14-6700		PAINTED REAR TOW EYES, BELOW BODY - REARMOUNT AERIALS	1	KMEM
TF-15-1030		HOSE BED, "STRAIGHT SHOT", 75-100 HIGH BODY	1	KMEM
TF-15-1900		ALUMINUM HOSE BED FLOORING - AERIAL	1	KMEM
TF-15-3110		HOSE BED COVER, VINYL WITH QTR TURNS	1	KMEM
TF-15-3190		HYPALON MATERIAL RED IN COLOR	1	KMEM
		****** HEADER, COMPARTMENT ACCESSORIES - REARMOUNTS**	**1**	**KMEM**
	>	**"NOTE" READ THIS BEFORE ADDING ANY ADDITIONAL GROUND LADDERS**	**1**	**KMEM**
		****** HEADER, 79-SA-HI-SS GROUND LADDERS**	**1**	**KMEM**
TN-00-5015	>	CENTER LADDER STORAGE, 79' SA "STRAIGHT SHOT"	1	KMEM
TN-00-7020		ROLL-UP DOOR - BRUSHED, LADDER COMPARTMENT, REAR MOUNT ONLY	1	KMEM
TN-01-0115		ALCO-LITE 115' LADDER COMP, 79' SA "STRAIGHT SHOT"	1	KMEM
TN-02-1155		ALCO-LITE PEL-30 30' 2-SECTION EXTENSION LADDER (ALUM)	1	KMEM
TN-02-1160		ALCO-LITE PEL-28 28' 2-SECTION EXTENSION LADDER (ALUM)	1	KMEM
TN-02-2510		ALCO-LITE PRL-16 16' ROOF LADDER W/FOLDING HOOKS (ALUM)	2	KMEM
TN-02-7000		ALCO-LITE AEL-14 14' ATTIC EXTENSION LADDER (ALUM)	1	KMEM
TN-02-8005		ALCO-LITE FL-12 12' FOLDING ATTIC LADDER (ALUM)	1	KMEM
		****** HEADER, PIKE POLES & HOLDERS - AERIALS**	**1**	**KMEM**
TN-20-0000		ADDITIONAL ITEMS SHIPPED WITH VEHICLE, ALL AERIAL DEVICES	1	KMEM
		****** HEADER, LOOSE EQUIPMENT - AERIAL**	**1**	**KMEM**
TN-35-1015		TWO (2) ZICO #SAC-44 FOLDING WHEEL CHOCKS, (2) MTD DRIVER SIDE	1	KMEM
		****** HEADER, 79' AERIAL LADDER, SINGLE AXLE - 750# W/DOWNRIGGERS**	**1**	**KMEM**
TQ-00-0560		79' AERIAL LADDER, GEN INFO, INTENT & DESIGN STANDARDS	1	KMEM
TQ-00-3000		MOUNTING OF AERIAL, REAR MOUNTS	1	KMEM
TQ-00-3210		HEIGHT AND REACH, 79' AERIAL LADDER	1	KMEM

PART NO	S	DESCRIPTION	QTY	ID
TQ-00-4000		MATERIAL STANDARDS, ALL DEVICES	1	KMEM
TQ-00-5004		79' AERIAL LADDER, HYDRAULIC SYSTEM, 750#	1	KMEM
TQ-00-5110		PARKER HOSE KIT - 2 JACK UNIT	1	KMEM
TQ-00-6120		HYDRAULIC PUMP - PRESSURE COMPENSATED	1	KMEM
TQ-00-7010		HYDRAULIC RESERVOIR - 40 GALLON	1	KMEM
TQ-00-7065		HYDRAULIC OIL - REGULAR - A/W 46 - 60 GAL	1	KMEM
TQ-00-7110		DIVERTER VALVE, REAR MOUNT DEVICES	1	KMEM
TQ-00-7214		OUTRIGGER HYDRAULIC CONTROL VALVE - 79 RM, PROPORTIONAL	1	KMEM
TQ-00-7410		ELECTRIC TURNTABLE HYDRAULIC CONTROL VALVE, RM LADDERS	1	KMEM
TQ-00-7505		HYDRAULIC SYSTEM FILTRATION	1	KMEM
TQ-00-8510		RM LADDER 2-OUTRIGGER, "IQAN" MOTION CONTROL SYSTEM - ELECTRIC CONTROLS @ TT	1	KMEM
TQ-00-8700		HYDRAULIC PUMP PRESSURE - DISPLAY	1	KMEM
TQ-00-8710		ELEVATION ANGLE OF LADDER - DISPLAY	1	KMEM
TQ-00-8715		VERTICAL HEIGHT OF LADDER - DISPLAY	1	KMEM
TQ-00-8725		DEGREE OF ROTATION FROM VEHICLE CENTERLINE - DISPLAY	1	KMEM
TQ-00-8730		E-ZONE CAB & BODY AVOIDANCE WARNING - DISPLAY	1	KMEM
TQ-00-8735		E-ZONE SHORT JACK WARNING - DISPLAY	1	KMEM
TQ-00-8740		CRADLE ALIGNMENT MESSAGE - DISPLAY	1	KMEM
TQ-00-8750		DEVICE LOAD MONITORING - DISPLAY	1	KMEM
TQ-00-8760		E-SPEED LADDER TIP SPEED CONTROL - DISPLAY	1	KMEM
TQ-00-8765		E-CUSH RAMP CONTROL FOR ELEVATION - DISPLAY	1	KMEM
TQ-00-8770		E-CUSH RAMP CONTROL FOR EXTENSION & RETRACTION - DISPLAY	1	KMEM
TQ-00-8890		WARNING MESSAGES - TURNTABLE ONLY	1	KMEM
TQ-00-9502		79' AERIAL LADDER, EMERGENCY HYDRAULIC PUMP, EPU	1	KMEM
TQ-01-1000		HOT SHIFT PTO W/CONTROLS IN CAB	1	KMEM
TQ-01-1100		FAST IDLE CONTROL FOR ALL AERIAL DEVICES	1	KMEM
TQ-02-0014		79' AERIAL LADDER, TORQUE BOX, SINGLE AXLE 750# W/DOWNRIGGERS	1	KMEM
TQ-02-1012		79' AERIAL LADDER OUTRIGGERS, SINGLE AXLE 750# W/DOWNRIGGERS	1	KMEM
TQ-02-1612		79' AERIAL LADDER OUTRIGGERS, SA - HORIZONTAL CYLINDER 750#	1	KMEM
TQ-02-1812		79' AERIAL LADDER OUTRIGGERS, SA - VERTICAL CYLINDERS, 750#	1	KMEM
TQ-02-2100		IQAN - OUTRIGGER STRING POTENTIOMETER - TWO (2) OUTRIGGERS	1	KMEM
TQ-02-2250		OVERSIZED OUTRIGGER/JACK FOOT PADS, APPLICABLE DEVICES	1	KMEM
TQ-02-2500		OUTRIGGER INTERLOCK SYSTEM & ALARM, ALL DEVICES	1	KMEM
		****** HEADER - OUTRIGGER LIGHTING, 2-OUTRIGGERS / 2-DOWNRIGGERS**	**1**	**KMEM**
TQ-02-5100		NO LOLLIPOP LIGHTS ON OUTRIGGER BEAMS	1	KMEM
TQ-02-5200		HALOGEN OUTRIGGER GROUND LIGHTS - RECTANGLE, 2-OUTRIGGERS	1	KMEM
TQ-02-5275		OUTRIGGER WARNING LIGHTS FROM LIGHT PACKAGE	1	KMEM
TQ-02-6005		OUTRIGGER WARNING LIGHT ACTIVATION, PRIMARY WARNING	1	KMEM
TQ-02-6800		OUTRIGGER SCOTCHLITE, WHITE	1	KMEM
TQ-02-7005		79' RM LADDER, BUTTON OUTRIGGER CONTROLS - SINGLE JACKS W/DOWNRIGGERS	1	KMEM
TQ-02-9200		OUTRIGGER LEVEL SIDE TO SIDE, ALL REAR MOUNT DEVICES	1	KMEM
TQ-03-0102		79' AERIAL LADDER, TURNTABLE, SINGLE & TANDEM AXLE	1	KMEM
TQ-03-3010		TURNTABLE DECK - ALUMINUM TREADPLATE	1	KMEM
TQ-04-1852		HEEL PIN STEP ON TURNTABLE, 79', 103', 109' & 123' & 100' M.M. LADDERS	1	KMEM
TQ-04-1855		TURNTABLE HANDRAILS, KNURLED ALUMINUM, 3-SIDES	1	KMEM
TQ-04-2112		HEEL PINS - 79'	1	KMEM
TQ-04-2300		STAINLESS STEEL CRADLE ALIGNMENT ARROWS ON TURNTABLE	1	KMEM
TQ-04-2800		SAFETY CHAINS BETWEEN TURNTABLE HANDRAIL, REAR MOUNTS & TDA	1	KMEM
TQ-04-5002		79' AERIAL LADDER, TURNTABLE SWIVEL, TANDEM & SINGLE AXLE	1	KMEM
TQ-04-9000		IQAN - SWIVEL ROTATION ENCODER	1	KMEM
TQ-06-0102		79' LADDER, LADDER CONSTRUCTION, SINGLE & TANDEM AXLE	1	KMEM
TQ-06-0900		STAINLESS STEEL EGRESS W/TIP SKID GAURDS	1	KMEM
TQ-06-1000		79' SA/TA, LADDER DIMENSIONS	1	KMEM
TQ-06-3000		RUNG COVERS - PHOTOLUMINESCENT, ALL DEVICES	1	KMEM
TQ-06-4005		SINGLE PAIR FOLDING STEPS @ LADDER TIP	1	KMEM
TQ-06-4100		RED SCOTCHLITE MATERIAL ON LAST 6' OF LADDER TIP	1	KMEM
TQ-06-9000		AERIAL TRAVEL SUPPORT, ALL DEVICES	1	KMEM
TQ-06-9020		CRADLE ILLUMINATION LIGHTS - HALOGEN LIGHTS	1	KMEM

PART NO	S	DESCRIPTION	QTY	ID
TQ-07-0102		79' AERIAL LADDER, ELEVATION SYSTEM, S/A AND T/A	1	KMEM
TQ-07-2800		IQAN - INCLINOMETER	1	KMEM
TQ-07-2801		IQAN - MOMENT LOAD INDICATOR	1	KMEM
TQ-07-2805		IQAN - E-CUSH CONTROL, ELEVATION SYSTEM - LADDER	1	KMEM
TQ-08-0102		79' AERIAL LADDER, ROTATION SYSTEM, SA & TA	1	KMEM
TQ-08-2800		ROTATION MOTOR AND BRAKE - 41" EXTERNAL BEARINGS	1	KMEM
TQ-08-2950		SWING DRIVE ADJUSTMENT	1	KMEM
TQ-08-3000		IQAN - "E-SPEED" SAFETY SYSTEM, LADDERS	1	KMEM
TQ-08-3100		IQAN - "E-ZONE" ROTATION SAFETY SYSTEM, 2-OUTRIGGERS	1	KMEM
TQ-08-3650		IQAN - "E-ZONE" CAB & BODY PROXIMITY SYSTEM - LADDERS	1	KMEM
TQ-09-0102		79' AERIAL LADDER, EXTENSION/RETRACTION SYSTEM, SINGLE & TAN	1	KMEM
TQ-09-2350		EXTENSION CYLINDERS PAINTED LADDER PAINT COLOR	1	KMEM
TQ-09-2800		IQAN - EXTENSION SYSTEM STRING POTENTIOMETER	1	KMEM
TQ-09-2810		IQAN - "E-CUSH" EXTENSION/RETRACTION SYSTEM - LADDERS	1	KMEM
TQ-09-3020		LADDER SLIDE PADS, 79' LADDER	1	KMEM
		LADDER EXTENSION NUMBERS, ALL DEVICES	**1**	**KMEM**
TQ-09-3150		LADDER LEVEL INDICATOR (BASE SECTION) - LIGHTED	1	KMEM
TQ-09-3205		LADDER, CABLE/HOSE/WIRE ROUTING, 79' LADDER	1	KMEM
		****** HEADER - LADDER, 120 VOLT ELECTRICAL SYSTEM & ACCESSORIES**	**1**	**KMEM**
TQ-10-0100		LADDER, 120 VOLT ELECTRICAL SYSTEM	1	KMEM
TQ-10-0125		DELETE LADDER TIP RECEPTACLE	1	KMEM
		****** HEADER - LADDER, 12 VOLT ELECTRICAL SYSTEM & ACCESSORIES**	**1**	**KMEM**
TQ-10-1018		HEEL PIN STEP LIGHTS - TECNIQ EON 3 LED LIGHTS	1	KMEM
TQ-10-1040		TURNTABLE CONTROL CONSOLE LIGHTING - LUMA BAR LED H2O	1	KMEM
TQ-10-1060		TURNTABLE CONSOLE STEP LIGHT - TECNIQ EON 3 LED	1	KMEM
TQ-10-1110		TWO (2) UNITY SPOTS @ LADDER BASE SECTION	1	KMEM
TQ-10-1210		ONE (1) UNITY SPOT & ONE (1) FLOOD @ LADDER TIP	1	KMEM
TQ-12-0010		LADDER, CONTROL STATION	1	KMEM
TQ-12-0020		RM LADDERS, CONSOLE LOCATED @ LH SIDE OF TURNTABLE, STD	1	KMEM
TQ-12-0085		PAINTED ALUMINUM TURNTABLE CONSOLE - MATCH LADDER COLOR	1	KMEM
TQ-12-0100		79' AERIAL LADDER, TURNTABLE CONTROL STATION, SA & TA	1	KMEM
TQ-12-2520		FIRE RESEARCH INSIGHT FLOWMETER @ TURNTABLE CONSOLE	1	KMEM
TQ-12-2595		TURNTABLE CONSOLE COVER - PAINTED RADIUS	1	KMEM
TQ-14-1200		LADDER, FIRE RESEARCH ACT -2 WAY COMMUNICATION SYSTEM - LOWER CONTROL	1	KMEM
TQ-14-1205		LADDER, FIRE RESEARCH ACT 2-WAY COMMUNICATION SYSTEM - UPPER SPEAKER/MIC	1	KMEM
TQ-18-1000		**** DELETE PRE-PIPED LADDER WATERWAY SYSTEM ****	1	KMEM
TQ-20-0102		79' AERIAL LADDER, LADDER CAPACITIES, SINGLE AXLE, 750#	1	KMEM
TQ-50-0100		FIRE DEPT AERIAL FAMILIARIZATION - PROVIDED BY FACTORY	1	KMEM
TQ-50-0140		FACTORY FAMILIARIZATION - FOUR (4) DAYS	1	KMEM
TQ-50-0600		AERIAL SERVICE, ALL DEVICES	1	KMEM
TQ-50-0700		WARNING DECALS, ALL DEVICES	1	KMEM
TQ-52-0100		AERIAL LADDER, MANUALS, TWO (2) SETS	1	KMEM
TQ-70-0102	>	79' AERIAL LADDER, SINGLE AXLE, CERTIFICATION & TESTING, 750#	1	KMEM
		****** HEADER - PAINT SECTION - ALL UNITS ******	**1**	**KMEM**
UA-00-1100		GENERAL PAINT DESCRIPTION - ALL	1	KMEM
UA-00-1200		GENERAL PRIMER & PREP DESCRIPTION - LADDER/PLATFORM	1	KMEM
UA-00-1400		GENERAL FINISH PAINT DESCRIPTION - LADDER/PLATFORM	1	KMEM
UA-00-2700		BODY BUFFING & FINISH - LADDER/PLATFORM	1	KMEM
		****** HEADER - LADDER/PLATFORM BODY PAINT ******	**1**	**KMEM**
UA-03-0100		INSIDE/UNDERSIDE BODY PAINTED BLACK - LADDER/PLATFORM	1	KMEM
UA-03-0300		JOB COLOR COMPARTMENT INT W/SPATTER PAINT - LADDER/PLATFORM	1	KMEM
UA-03-0900		SINGLE COLOR BODY PAINT SCHEME - LADDER/PLATFORM	1	KMEM
UA-03-2200		PUMPHOUSE & PLUMBING PAINTED JOB COLOR - LADDER/PLATFORM	1	KMEM
		****** HEADER - SINGLE AXLE CUSTOM CHASSIS PAINT (AERIAL)**	**1**	**KMEM**
UA-05-0050		CUSTOM CAB PRIMER & PREP	1	KMEM
UA-05-0070		CUSTOM FINISH PAINT & PREP	1	KMEM
UA-05-0100		SINGLE COLOR CUSTOM CAB PAINT SCHEME	1	KMEM
UA-05-0350		CUSTOM CAB BUFFING & FINISH	1	KMEM

PART NO	S	DESCRIPTION	QTY	ID
UA-05-0360		CUSTOM CAB INTERIOR PAINT - TEXTURED GRAY	1	KMEM
UA-05-0400		CUSTOM CHASSIS GLOSS BLACK COLOR FRAME RAILS	1	KMEM
UA-05-0500		CUSTOM CHASSIS WHEEL AND HUB PAINT - SINGLE AXLE	1	KMEM
UA-06-0200		LADDER, PAINTING, ALL DEVICES, WHITE #91528	1	KMEM
UA-06-0450		EXTENSION CYLINDERS PAINTED TO MATCH LADDER COLOR	1	KMEM
UA-06-0905		TORQUEBOX PAINT - BLACK	1	KMEM
UA-06-1100		OUTRIGER PAINT - SILVER URETHABOND 104	1	KMEM
UA-06-1205		TURNTABLE PAINT - LADDER COLOR	1	KMEM
UA-06-1215		TURNTABLE CONSOLE PAINT - LADDER COLOR	1	KMEM
UA-06-1225		LIFT CYLINDERS CONSOLE PAINT - LADDER COLOR	1	KMEM
UA-06-1500		LADDER RUST INHIBITOR - ALL DEVICES	1	KMEM
UA-06-2110	>	PAINT CODE, SINGLE COLOR, FILL IN BLANKS	1	KMEM
UA-06-2130		PAINT CODES, AERIAL DEVICE - WHITE #91528	1	KMEM
UA-06-2200		PINT OF TOUCH-UP PAINT	1	KMEM
UA-06-2510		FINALIZATION & DETAILING - LADDER/PLATFORM	1	KMEM
UA-06-2850		RUSTPROOFING WARRANTY, TEN (10) YEAR	1	KMEM
		****** HEADER, LETTERING & STRIPING - 79-SA-RM**	**1**	**KMEM**
UA-12-0100		COMPUTER GENERATED LETTERING	1	KMEM
UA-12-1200		GOLDLEAF W/ DROP SHADOW LETTERING ON FRONT CAB DOORS	1	KMEM
UA-12-1245		3" LETTERING ON FRONT CAB DOORS	1	KMEM
UA-12-3100		GOLDLEAF W/ DROP SHADOW LETTERING ON CAB SIDE PANEL	1	KMEM
UA-12-3145		3" LETTERING ON CAB SIDE PANEL	1	KMEM
UA-13-0100		LETTERING FONT - BASIC BLOCK TYPE FONT	1	KMEM
UA-50-0100		NFPA REQUIRED SCOTCH-LITE STRIPING - SA AERIAL	1	KMEM
UA-50-0110		4" SCOTCH-LITE STRIPE ON CAB AND BODY - SA AERIAL	1	KMEM
UA-58-5100		WHITE SCOTCH-LITE	1	KMEM
UA-80-6000		REAR CHEVRON STRIPING	1	KMEM
UA-80-6002		50% VERTICAL SURFACE	1	KMEM
UA-80-6030		6" REAR SCOTCH-LITE CHEVRON STRIPING	1	KMEM
UA-80-6070		RUBY RED & LEMON YELLOW SCOTCH-LITE	1	KMEM
		****** PROPOSED - AERIAL WARRANTY PKG, W/PUMP @ REAR OF SPEC**	**1**	**KMEM**
W6-00-000J		PROPOSED - KME WARRANTY, STARTING ON DELIVERY DATE	1	KMEM
W6-00-0010	**X** <	PROPOSED - 5 YEAR FCAM WARRANTY - CUSTOM CHASSIS	1	
		$16,500 for 79 per email Phil to Byron 9-27-16		
W6-00-003M	>	PROPOSED - 5 YEAR WARRANTY - BASE WITH CUSTOM CHASSIS	1	KMEM
W6-00-0150		PROPOSED - 5 YEAR CUMMINS BASE WARRANTY	1	KMEM
W6-00-0210		PROPOSED - 5 YEAR ALLISON EVS TRANSMISSION WARRANTY	1	KMEM
W6-00-0220		PROPOSED - 3 YEAR COOLING SYSTEM WARRANTY - CUSTOM	1	KMEM
W6-00-0230		PROPOSED - LIFETIME FRAMERAIL WARRANTY	1	KMEM
W6-00-0242		PROPOSED - SHEPPARD STEERING GEAR STANDARD - THREE YEAR WARRANTY	1	KMEM
W6-00-0254		PROPOSED - 5 YEAR MERITOR FRONT AXLE - WARRANTY	1	KMEM
W6-00-0258		PROPOSED - 5 YEAR MERITOR SINGLE AXLE REAR - WARRANTY	1	KMEM
W6-00-0270		PROPOSED - 3 YEAR MERITOR ABS - WARRANTY	1	KMEM
W6-00-0320	>	PROPOSED - 10 YEAR CAB STRUCTURAL WARRANTY	1	KMEM
W6-00-0330		PROPOSED - 10 YEAR BODY STRUCTURAL WARRANTY	1	KMEM
W6-00-0390		PROPOSED - 10 YEAR CAB & BODY CORROSION WARRANTY	1	KMEM
W6-00-0450		PROPOSED - PAINT FINISH WARRANTY, TEN (10) YEAR	1	KMEM
W6-00-0470		PROPOSED - 5 YEAR LETTERING WARRANTY	1	KMEM
W6-00-0483		PROPOSED - 1 YEAR BRIGHTWORK WARRANTY	1	KMEM
W6-00-0490		PROPOSED - 10 YEAR STAINLESS STEEL PIPING WARRANTY	1	KMEM
W6-00-0500		PROPOSED - REAR SUSPENSION - LEAF SPRING - 1 YEAR WARRANTY	1	KMEM
W6-00-0570		PROPOSED - SAFEGUARD TECHNOLOGY - 10 YEAR - RUNG COVERS	1	KMEM
W6-00-0590		PROPOSED - 20 YEAR AERIAL LADDER WARRANTY	1	KMEM
W6-00-0630	>	PROPOSED - FIVE (5) YEAR AERIAL WATERWAY SWIVEL WARRANTY - AMITY	1	KMEM
W6-00-0670		PROPOSED - AERIAL DEVICE REPAIR POLICY AND LIABILITY DISCLAIMER	1	KMEM
W6-00-0695		PRO - AERIAL DEVICE HYDRAULIC COMPONENT WARRANTIES	1	KMEM
W6-00-0710		PROPOSED - LIFETIME POLY TANK WARRANTY - ALL TANKS	1	KMEM

PART NO	S	DESCRIPTION	QTY	ID
W6-00-0820		PROPOSED - WATEROUS 5 YEAR PUMP WARRANTY (PARTS & LABOR)	1	KMEM
W6-00-0823	**X**	WATEROUS FCAM 5 YR WARRANTY CORRECTION	1	
W6-00-1153	**S**	DEALER PROVIDES WARRANTY TRANSPORT PROP and REQ	1	DLR
W6-00-1330		PROPOSED - AKRON - 5 YEAR LIMITED WARRANTY	1	KMEM
W6-00-1340		PROPOSED - AKRON HEAVY DUTY VALVE - 10 YEAR WARRANTY	1	KMEM
W6-00-1520		PROPOSED - SEATS INC.- 911 SEATING 5 YEAR WARRANTY	1	KMEM
WA-00-0010		"AERIAL FIRE APPARATUS" NFPA 2016 STATEMENT OF EXCEPTIONS	1	KMEM

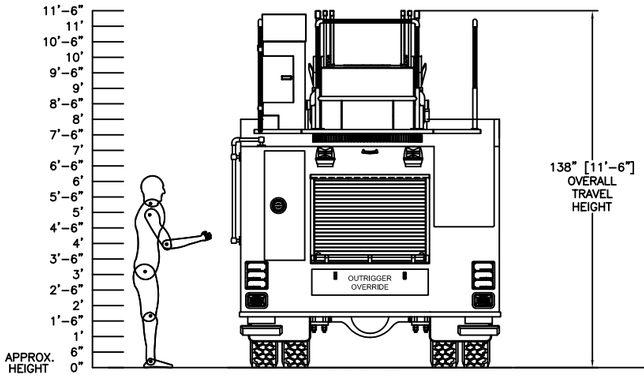

REAR VIEW

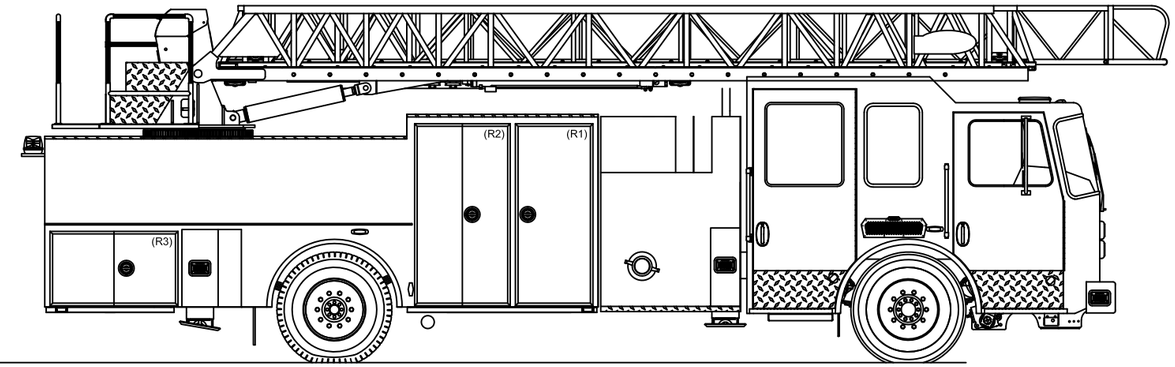

OFFICERS SIDE VIEW

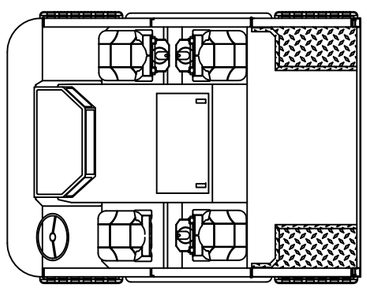

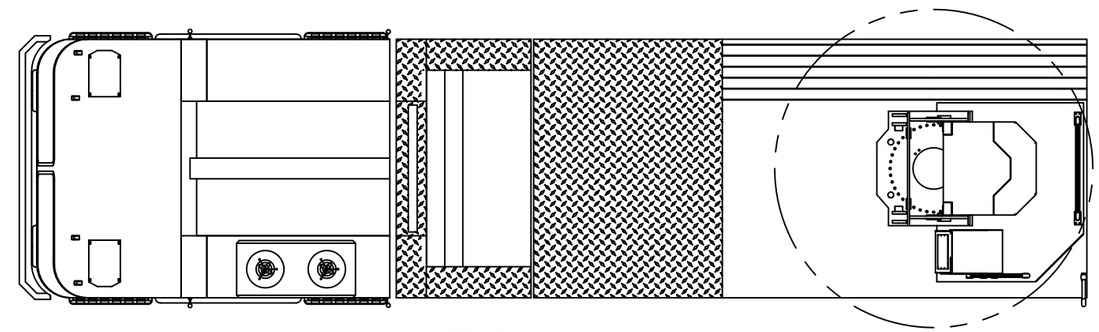

TOP VIEW

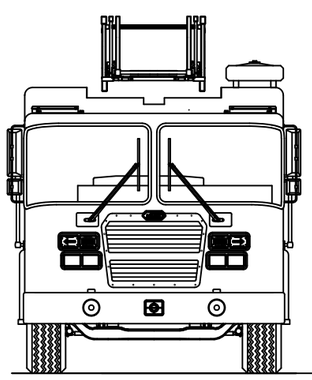

FRONT VIEW

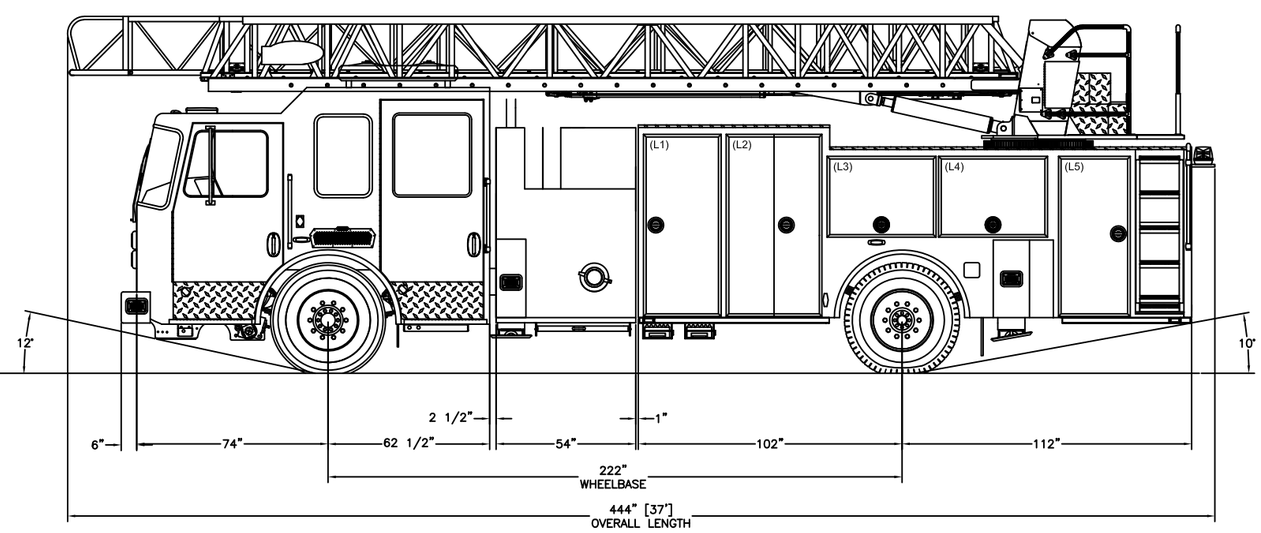

DRIVERS SIDE VIEW

CAB: 100"W PREDATOR MFD 10" RAISED ROOF
ENGINE & TRANS. CUMMINS ISL 350 HP/ 3000 EVS
AXLES: 23,000# FRONT/33,500# REAR
PUMP: WATEROUS CSU-C20; 1,250 GPM SINGLE STAGE
WATER TANK: 250 GALLONS

THIS DRAWING IS A GENERAL CONFIGURATION AND MAY NOT NECESSARILY REFLECT ALL CONTRACTUAL REQUIREMENTS. CONTRACT SPECIFICATIONS SHALL PREVAIL OVER DRAWING.

CUSTOMER APPROVAL:

NAME:

TITLE:

DATE:

SYM	DATE	REVISION DESCRIPTION	APP'D

SALES ENGINEER : TBD

DIMENSIONS ARE APPROXIMATE & MAY VARY DUE TO BUILD ADJUSTMENTS

SCALE	DWG SIZE	DRAWN BY	Z.ZSCHUNKE	DATE
NONE	B	APPROVED BY	P.HOHERCHAK	9-30-16

79' REAR MOUNT LADDER

MAPC 15 BASIC

PROPOSAL DRAWING

KME
REV GROUP
ONE INDUSTRIAL COMPLEX - NESQUEHONING, PA 18240

KME

FCAM BASIC REAR MOUNT

109 FOOT AERIAL LADDER

“QUINT”

MAPC 16

Quote SO

MAPC/FCAM 16

MAPC 16 BASIC 109' REAR MOUNT AERIAL QUINT

Sales Rep:

Terms:

Drawing #:
Est. Delivery Date: / /
Customer PO #:
Customer #:
QPF #:

Penalty:

Quote No: 10094-0009
10/04/2016

PART NO	S	DESCRIPTION	QTY	ID
		== REAR MOUNT LADDER - 713.016 07/13/16 ==	**1**	**KMEM**
		== LETTERING & STRIPING, 109-4-RM - 713.016 07/13/16 ==	**1**	**KMEM**
		== COMPARTMENT ACCESSORIES REARMOUNT AERIAL - 713.016 07/13/16 ==	**1**	**KMEM**
		== MISC AND LOOSE EQUIPMENT (AERIAL) - 713.016 07/13/16 ==	**1**	**KMEM**
		== AERIAL WARRANTY PACKAGE W/PUMP - 713.016 07/13/16 ==	**1**	**KMEM**
		DEALER ======= DEALER ======= DEALER	**1**	**DLR**
		QUOTE DATA VERSION: 0713.016 - 2016 DATA SET	**1**	**KMEM**
		INDEX OF PART NUMBERS	**1**	**KMEM**
		****** HEADER - CONTRACTS, PROPOSAL FORM, ETC @ FRONT OF SPECS**	**1**	**KMEM**
		****** PROPOSED - AERIAL SPEC BOILERPLATE**	**1**	**KMEM**
04-00-0000		PROPOSED - GENERAL INFORMATION - NFPA 1901	1	KMEM
04-00-0033		PROPOSED - COMPLETION INFO	1	KMEM
04-00-0040		PROPOSED - FMVSS CERTIFICATION	1	KMEM
04-00-0060		PROPOSED - RECORDS	1	KMEM
04-00-0075		PROPOSED - TOP OF THE LINE CHASSIS MULTIPLEX	1	KMEM
04-00-0107		PROPOSED - GENERAL CONSTRUCTION - AERIAL	1	KMEM
04-00-0120		PROPOSED - SINGLE LINE RESPONSIBILITY	1	KMEM
04-00-0130		PROPOSED - PRODUCT LIABILITY - $30,000,000.00	1	KMEM
04-00-0170		PROPOSED - CRITERIA & CODE CONFORMANCE - AERIAL	1	KMEM
04-00-0193		PROPOSED - PAINT PERFORMANCE CERTIFICATION	1	KMEM
04-00-0490		PROPOSED - PRICES & PAYMENTS	1	KMEM
04-00-0540		PROPOSED - BOND REQUIREMENTS	1	KMEM
04-00-0560		PROPOSED - PERFORMANCE BOND	1	KMEM
04-00-0580		PROPOSED - NON-COLLUSION AGREEMENT	1	KMEM
04-00-0630		PROPOSED - MATERIAL & WORKMANSHIP	1	KMEM
04-00-0660		PROPOSED - CONTRACT SPECIALIST	1	KMEM
04-00-0680		PROPOSED - APPROVAL DRAWING	1	KMEM
04-00-1200		PROPOSED - DELIVERY	1	KMEM
04-00-1215		PROPOSED - INSTRUCTION MANUALS, TWO (2) SETS - CD	1	KMEM
04-00-1215	X	POWERPOINT DELIVERY - PROPOSAL FCAM AERIAL	1	
04-00-1300		PROPOSED - VEHICLE FLUIDS PLATE	1	KMEM
04-00-1521	X	PROPOSED - KME and BULLDOG FAMA MEMBERSHIP	1	

PART NO	S	DESCRIPTION	QTY	ID
04-00-1540		PROPOSED - MANUFACTURED IN THE UNITED STATES	1	KMEM
04-00-1550		PROPOSED - ISO 9001 QUALITY MANAGEMENT SYSTEM	1	KMEM
04-00-1570		PROPOSED - NFPA TREAD PLATE CERTIFICATION	1	KMEM
04-00-2440		PROPOSED - UNDERWRITERS LABORATORIES (UL) TESTING - AERIAL	1	KMEM
04-00-2445		PROPOSED - UNDERWRITERS LABORATORIES (UL) TESTING - FCAM	1	DLR
07-00-0015		"AERIAL FIRE APPARATUS" NFPA 2016 CHAPTERS OF COMPLIANCE	1	KMEM
08-00-0000		VEHICLE DATA PLATE DESCRIPTION	1	KMEM
14-00-0000		NFPA ROLLOVER STABILITY GENERAL STATEMENT	1	KMEM
15-00-0010	>	PROPOSED - PRINCIPAL APPARATUS DIMENSIONS & GVWR	1	KMEM
15-00-0050		!!! CRITICAL OVERALL HEIGHT REQUIREMENT !!! - "NO"	1	KMEM
15-00-0150		!!! CRITICAL OVERALL LENGTH REQUIREMENT !!! - "NO"	1	KMEM
AA-00-002A		SERVICE CENTER - PROPOSAL FCAM	1	DLR
BA-00-0045		<1> 109-MD-TA AERIALCAT LADDER	1	KMEM
BA-00-3000		SEAT AND SEAT BELT ANCHOR TESTING	1	KMEM
BA-02-0335		<2> RM PREDATOR - TANDEM AXLE - MD 109' RM	1	KMEM
BA-02-2305		<3> 140" TRAVEL HEIGHT - 109' MD	1	KMEM
BA-03-1420		<4> HI BODY, 109-HD-TA WITH PUMP	1	KMEM
BA-04-0555		AERIAL CHASSIS, REAR MOUNT PREDATOR -TANDEM AXLE (MEDIUM)	1	KMEM
		****** HEADER - 100" PREDATOR CAB ******	**1**	**KMEM**
BA-04-0805		PREDATOR CAB - BASE, 100"	1	KMEM
BA-04-0850		PREDATOR CAB - BASE - ALUMINUM CONSTRUCTION	1	KMEM
BA-04-0990		PREDATOR 100" - CRASH TESTING	1	KMEM
BA-04-0995		PREDATOR 100" - 120,000# ROOF & SIDE TESTING	1	KMEM
BA-04-1300		PREDATOR 100" - MFD CAB LENGTH (DIM - 62 1/2")	1	KMEM
BA-04-1900		PREDATOR 100" - VISTA DIMENSIONS FRONT SEATING & ENGINE ENCLOSURE	1	KMEM
BA-04-4510		2010 - RM 10" RAISED ROOF 4" CENTER NOTCH & 2" WATERWAY NOTCH	1	KMEM
BA-05-0260		BATTERY ACCESS DOORS - REAR STEP WELLS, EACH SIDE	1	KMEM
BA-05-0610		BARRIER HEIGHT CAB DOORS, 100" PREDATOR "MFD, LFD & X-LFD"	1	KMEM
BA-05-0650		CAST ANTI-SLIP ENTRY STEPS FOR REDUCED LENGTH CAB DOORS	1	KMEM
BA-05-0700		CAB DOORS - BOLT ON WEATHER STRIP	1	KMEM
BA-05-1015		PREDATOR DOOR LATCHES, HD LOOP STYLE LATCH - BARRIER HEIGHT DOORS	1	KMEM
BA-05-1035		LOCKING CAB DOOR , OUT + IN, LOOP STYLE LATCH	1	KMEM
BA-05-1037		KEY MODEL #2001	1	KMEM
BA-05-1103		WINDOWS, MANUAL HAND CRANK STYLE - 100"	1	KMEM
BA-05-1130		DOOR WINDOW TRIM EXTRUSION, 4 - DOOR	1	KMEM
BA-05-1325		FULL HEIGHT INTERIOR DOOR PANELS - BRUSH ALUM, 4 - DOOR	1	KMEM
BA-05-1510		SCOTCHLITE MATERIAL ON INTERIOR OF DOOR PANEL 4-DOORS	1	KMEM
		****** HEADER - CAB EXTERIOR ACCESSORIES & OPT, 100" PREDATOR**	**1**	**KMEM**
BA-05-2410		WINDSHIELD, 100" PREDATOR CAB	1	KMEM
BA-05-2425		WINDSHIELD WIPERS & WASHERS - 100" PREDATOR	1	KMEM
BA-05-2450		SIDE VIEWING WINDOWS NON-SLIDING - PREDATOR	1	KMEM
BA-05-2500		DARK TINT WINDOWS, SIDE VIEWING, REAR DOORS & REAR WALL	1	KMEM
BA-05-2600		GRAB RAILS EXTERIOR, KNURLED ALUMINUM EXTRUSION	1	KMEM
BA-05-2668		PREDATOR INTERIOR GRAB HANDLES - WHEELABRATED	1	KMEM
BA-05-2692		INTERIOR "A" POST GRAB HANDLE "PREDATOR" - WHEELABRATED	1	KMEM
BA-05-2725		FRONT CAB GRILLE - SHAPED PERFORATED POLISHED STAINLESS, 100" PRED, SS, PANTHER	1	KMEM
BA-05-2825		SIDE CAB GRILLES -SHAPED SHAPED PERFORATED POLISHED STAINLESS, 100" PRED, SS, PA	1	KMEM
BA-05-2900		ALUMINUM CAB WHEEL LINERS	1	KMEM
BA-05-2910		ALUMINUM CAB FENDERETTES	1	KMEM
BA-05-3000		FRONT MUD FLAPS	1	KMEM
BA-05-3500		VELVAC MIRRORS " WEST COAST" HEATED / REMOTE - W/CONVEX SPOT	1	KMEM
BA-05-3690		MIRROR CONTROL IN MULTIPLEX CONTROL SCREEN	1	KMEM
BA-05-5115		INTERIOR TRIM, 100" PREDATOR	1	KMEM
BA-05-5180		CUSTOM CAB INTERIOR PAINT - TEXTURED GRAY	1	KMEM
BA-05-5200		PREDATOR REAR INTERIOR CAB WALL, GRAY DURAWEAR UPHOLSTERY	1	KMEM
BA-05-5335		TREAD PLATE KICK PLATE ON LOWER INTERIOR REAR WALL	1	KMEM

PART NO	S	DESCRIPTION	QTY	ID
BA-05-5530	>	STORAGE COMPARTMENTS UNDER FRONT SEATS - 100" PREDATOR	1	KMEM
BA-05-5610		BARYFOL FLOORING	1	KMEM
BA-05-5650		1" ACOUSTICAL INSULATION	1	KMEM
BA-05-5824		ENGINE ENCLOSURE 100" PREDATOR FAB DASH (DURAWEAR)	1	KMEM
BA-05-5860		ENGINE ENCLOSURE MATERIAL - ALUMINUM CAB	1	KMEM
BA-05-7040		SUN VISORS, 100" PREDATOR CAB, PADDED VINYL	1	KMEM
BA-06-0400	>	DELETED - TOP ROLLOVER PROTECTION SYSTEM	1	KMEM
		****** HEADER - CAB SEATING & ACCESSORIES, 100" - PREDATOR MFD**	**1**	**KMEM**
	>	****** SEATING OPTIONS BOSTROM, 100" - PREDATOR - MFD - NON ROLLTEK**	**1**	**KMEM**
BA-06-3215		DRIVERS SEAT, BOSTROM SIERRA FX BUCKET, ABTS 2-WAY MECHANICAL	1	KMEM
BA-06-3630		OFFICERS SEAT, BOSTROM 450 SCBA, ABTS, FIXED	1	KMEM
BA-06-3910		ZICO ULLH SCBA BOTTLE BRACKET - OFFICER'S SEAT	1	KMEM
		MFD CAB - REAR FACING BOSTROM SEATS - NON ROLLTEK	**1**	**KMEM**
BA-06-4110		BOSTROM 450 SCBA ABTS REAR FACING, OUTBOARD, DS	1	KMEM
BA-06-4180		ZICO ULLH SCBA BOTTLE BRACKET - OUTBOARD, DS	1	KMEM
BA-06-4210		BOSTROM 450 SCBA ABTS REAR FACING, OUTBOARD, OS	1	KMEM
BA-06-4280		ZICO ULLH SCBA BOTTLE BRACKET - OUTBOARD, OS	1	KMEM
		MFD CAB - FORWARD FACING BOSTROM SEATS - NON ROLLTEK	**1**	**KMEM**
BA-06-7200		**** DELETE FORWARD FACING SEAT RISER - NOT REQUIRED	1	KMEM
BA-06-8005		BOSTROM SEATING MATERIAL, GRAY TWEED DURAWEAR	1	KMEM
BA-06-8055		NO SCBA PARADE COVERS SUPPLIED	1	KMEM
		****** HEADER - VEHICLE DATA RECORDER SYSTEMS**	**1**	**KMEM**
BA-06-9103	>	CLASS ONE SEAT BELT WARNING SYSTEM - UP TO 6 POSITIONS - ULTRAVIEW DISP	1	KMEM
BA-06-9115		FOUR (4) SEATING POSITIONS	1	KMEM
BA-06-9250	>	HELMET HOLDERS - IN CAB - ZICO	4	KMEM
BA-06-9310		CLASS ONE VEHICLE DATA RECORDER - MULTIPLEX	1	KMEM
		****** HEADER - CAB INTERIOR ACCESSORIES & OPTIONS, 100" PREDATOR**	**1**	**KMEM**
		****** HEADER - INSTRUMENTATION & CONTROLS, 100" PREDATOR - NARROW VISTA**	**1**	**KMEM**
BA-08-0214		DASH & CENTER CONSOLE - 100" PREDATOR FAB DASH (UPHOLSTERED)	1	KMEM
BA-08-0275		INSTRUMENT PANEL, 100" PREDATOR - NARROW	1	KMEM
BA-08-0300		INTER AXLE LOCK CONTROL SWITCH	1	KMEM
BA-08-0315		DIESEL EXHAUST FLUID LEVEL GAUGE	1	KMEM
BA-08-0320		ENGINE COMPRESSION BRAKE CONTROLS	1	KMEM
BA-08-0620		ULTRAVIEW 450 DISPLAY ON CAB DASH FOR ES-KEY SYSTEM	1	KMEM
BA-08-1220		INDICATOR CLUSTER, 100" PREDATOR	1	KMEM
BA-08-1225		"INTER AXLE LOCK" INDICATOR CLUSTER	1	KMEM
BA-08-1235		"ATC DISABLED" INDICATOR CLUSTER	1	KMEM
BA-08-1240		"ATC ACTIVE" INDICATOR CLUSTER	1	KMEM
BA-08-1265		"OUTRIGGERS NOT STOWED" INDICATOR ON DASH	1	KMEM
BA-08-1800		LOWER RIGHT AUXILIARY SWITCH PANEL - PREDATOR - FAB	1	KMEM
BA-08-1900		PUMP SHIFT CONTROL ON LOWER LEFT DASH PANEL	1	KMEM
BA-08-1950		MULTIPLEX CONTROL PUMP SHIFT SWITCH - MULTIPLEX	1	KMEM
BA-08-2000		AERIAL LADDER, LADDER POWER/PTO SWITCHES IN CAB	1	KMEM
BA-08-2750		PREDATOR COMPUTER TERMINAL IN FRONT OF OFFICER (FABRICATED)	1	KMEM
BA-08-2905		OVERHEAD ABS PANEL, FLAT FACED, 100" PREDATOR	1	KMEM
BA-08-4405		RM HEATER/ DEFROSTER & ACCESS, PREDATOR 10" RR W/TWO NOTCH	1	KMEM
BA-08-6900		HVAC CONTROL SYSTEM - INCOPORATED INTO MULTIPLEX CONTROL DISPLAY	1	KMEM
BA-08-9000		CAB TILT SYSTEM & OPTIONS	1	KMEM
BA-08-9110		PARKING BRAKE/CAB TILT INTERLOCK	1	KMEM
		FRAME & AXLE PACKAGE, TANDEM AXLE CHASSIS (MEDIUM)	**1**	**KMEM**
BA-09-5200		110,000 PSI FRAME: AERIAL CHASSIS TRIPLE FRAME	1	KMEM
		HEADER - FRONT BUMPER, EXTENSIONS & ACCESSORIES	**1**	**KMEM**
BA-10-0055	>	BUMPER 12" PAINTED STEEL BUMPER - ALL CABS	1	KMEM
BA-10-0100	>	6" FRONT BUMPER EXTENSION WITH TREAD PLATE GRAVEL SHIELD	1	KMEM
BA-10-0405		TREADPLATE GRAVEL SHIELD STANDARD INSTALLATION	1	KMEM
BA-10-2010		TWO (2) PAINTED TOW HOOKS BELOW FRONT BUMPER	1	KMEM
BA-10-5000		AERIAL TRAVEL SUPPORT FOR ANY REAR MOUNT TYPE AERIAL	1	KMEM

PART NO	S	DESCRIPTION	QTY	ID
BA-14-0170		23,000# FRONT AXLE MERITOR MFS-20-133A-N	1	KMEM
BA-14-1110		MERITOR, EX-225 17" DISC BRAKES, FRONT AXLE, W/ AUTO SLACK ADJUSTMENT	1	KMEM
BA-14-2040		SUSPENSION FRONT - 23,000# AXLES	1	KMEM
BA-14-2095		**AERIAL DEVICE TRAVEL HEIGHT CRITICAL!!!! ** REQUIRES SMALL AXLE SPACER	1	KMEM
BA-14-2110		FRONT AXLE SHOCK ABSORBERS - MONROE "MAGNUM - 70"	1	KMEM
BA-15-1050		54,000# TANDEM REAR AXLE MERITOR RT-52-185	1	KMEM
BA-15-1510		16.5" X 7" S-CAM BRAKES - MERITOR REAR TANDEM W/AUTO SLACK ADJ.	1	KMEM
BA-15-2810		VEHICLE TOP SPEED - 2016 NFPA STATEMENT	1	KMEM
BA-15-4640	>	RIDEWELL "DYNALASTIC" 202S RUBBER BLOCK SUSPENSION, TANDEM AXLE 58,000#	1	KMEM
		****** HEADER - BRAKE SYSTEM, TANDEM AXLE VEHICLE**	**1**	**KMEM**
BA-20-1005		BRAKE SYSTEM, TA CHASSIS	1	KMEM
BA-20-1110		ABS BRAKING FOR TANDEM REAR AXLE CHASSIS	1	KMEM
BA-20-1275	>	ELECTRONIC STABILITY CONTROL (ESC) WITH (ATC) - CUSTOM TA	1	KMEM
BA-20-1530		AIR RESERVOIRS 7100 CU IN TA, BASE	1	KMEM
BA-20-2025		1/4 TURN DRAIN VALVES ON ALL AIR TANKS	1	KMEM
BA-20-3010		ROCKWELL/WABCO SYSTEM SAVER #1200, AIR DRYER HEATED	1	KMEM
BA-20-5005		COLOR CODED SYNFLEX BRAKE LINES W/QUICK RELEASE FITTINGS - TA	1	KMEM
BA-20-5500		AIR COMPRESSOR -WABCO 18.7 CFM- STD. FOR ALL CUMMINS ENGINES	1	KMEM
BA-20-5810		BRAKE TREADLE VALVE	1	KMEM
BA-20-6010		PARKING BRAKE CONTROL - NEAR DRIVER - ALL WHEEL LOCK	1	KMEM
		HEADER, TIRE AND WHEEL OPTIONS	**1**	**KMEM**
		HEADER, WHEELS, 23,000 FRONT AXLE - ALUMINUM	**1**	**KMEM**
BA-25-1040		FRONT WHEELS, POLISHED ALUMINUM, 22.5 X 13, 24,390#	1	KMEM
BA-25-1045		FRONT WHEELS, LUG AND HUB TRIM (ALUMINUM WHEELS)	1	KMEM
BA-25-2030	>	FRONT, GOODYEAR 425/65R22.5 L 24,400# G296 MSA MIXED - 68MPH	1	KMEM
BA-25-2400		GOODYEAR - FIRE SERVICE RATING - TIRE RESTRICTIONS	1	KMEM
		HEADER, TIRES & WHEELS, 54,000 TANDEM REAR AXLE	**1**	**KMEM**
BA-25-5015	>	REAR WHEELS, STEEL DISC TYPE, 22.5 X 9, TA	1	KMEM
BA-25-5052		REAR WHEELS, NO LUG AND HUB TRIM PROVIDED (STEEL)	1	KMEM
BA-25-7055	>	REAR, GDYR 315/80R22.5 J 64,000# RHD II+ TRACTION - 75MPH, TA	1	KMEM
BA-25-7400		GOODYEAR - FIRE SERVICE RATING - TIRE RESTRICTIONS	1	KMEM
BA-25-9905		TIRE PRESSURE MONITORING - LED VALVE STEM CAPS - TEN TIRES	1	KMEM
		100" PREDATOR - ENGINE PACKAGE, HEAVY TANDEM AXLE CHASSIS	**1**	**KMEM**
		****** 100" - HEADER, ENGINE & ENGINE COMPONENTS**	**1**	**KMEM**
BA-30-3185	>	CUMMINS ISX12 - 400 HP @ 1800 RPM TQ 1550 lb-ft @ 1100 - PREDATOR NARROW	1	KMEM
BA-30-9810		PROPOSED - ENGINE CERTIFICATION CUSTOM CHASSIS	1	KMEM
BA-32-0035		COOLING/RADIATOR, 100" PREDATOR - NARROW	1	KMEM
BA-32-0070		ENGINE COOLANT FILTER - CUMMINS ISC - ISX	1	KMEM
BA-32-0085		COOLING SYSTEM CRITERIA	1	KMEM
BA-32-0100		TRANSMISSION COOLER	1	KMEM
BA-32-0120		RADIATOR SKID PLATE	1	KMEM
BA-32-0160		CHARGED AIR COOLER (FRONT MOUNT)	1	KMEM
BA-32-0245		COOLANT FAN, W/CLUTCH - CUMMINS ISX12	1	KMEM
BA-32-0340		HEATER AND COOLANT HOSES/PIPING	1	KMEM
BA-32-0420		LOW COOLANT INDICATOR LIGHT AND ALARM IN CAB	1	KMEM
BA-33-0020	>	SECONDARY BRAKING - ENGINE COMPRESSION BRAKE	1	KMEM
BA-33-0150		FAST IDLE CONTROL FOR ALL ELECTRONIC ENGINES - SMART WHEEL	1	KMEM
BA-33-0160		ENGINE AIR CLEANER	1	KMEM
BA-33-0180		SPARK ARRESTOR	1	KMEM
BA-33-0200		ACCELERATOR PEDAL - FLOOR MOUNT	1	KMEM
BA-33-0250		REMOTE THROTTLE & INTERLOCK HARNESS	1	KMEM
BA-40-0300		ALLISON 4000EVS TRANS. - COMPRESSION BRAKE	1	KMEM
BA-40-0660		FIVE (5) SPEED AUTOMATIC TRANSMISSION - 4000 SERIES	1	KMEM
BA-40-0700		ALLISON TRANSMISSIONS, ELECTRONIC TOUCH PAD SHIFTER IN CAB	1	KMEM
BA-40-0855		TRANSMISSION OIL LEVEL SENSOR	1	KMEM
BA-40-0860		ALLISON PARK TO NEUTRAL	1	KMEM

PART NO	S	DESCRIPTION	QTY	ID
BA-40-0910		ALLISON PRESELECT PROGRAMMING	1	KMEM
BA-40-0920		PRESELECT PROGRAMMED FOR 4TH GEAR	1	KMEM
BA-40-4720		TES-389 TRANS FLUID 4000EVS TRANSMISSION	1	KMEM
BA-45-0110		DRIVE LINES DANA-SPICER #1810 SERIES	1	KMEM
BA-49-0100		DIESEL EXHAUST FLUID TANK - 5 GALLON	1	KMEM
BA-50-0110		EXHAUST SYSTEM - DPF & SCR SYSTEM - INLINE SYSTEM	1	KMEM
BA-50-0155		ALUMINIZED STEEL EXHAUST TAILPIPE/OUTLET OS - DPF + SCR SYSTEM	1	KMEM
BA-50-2500		FUEL SYSTEM	1	KMEM
BA-50-2510		FUEL TANK - 65 GALLON, STEEL	1	KMEM
BA-50-2625		FUEL LINES - FIBER REINFORCED HOSE	1	KMEM
BA-50-2645	>	CUMMINS FUEL-WATER SEPARATOR	1	KMEM
BA-50-2670		FUEL PUMP SECONDARY ELECTRIC, REQ. ON 210" W-B OR LONGER	1	KMEM
BA-50-2700		FUEL POCKET, LEFT SIDE REAR WHEEL WELL PANEL	1	KMEM
BA-50-5050	>	STEERING - DUAL SHEPPARD POWER STEERING GEARS	1	KMEM
BA-50-7115		STEERING COLUMN - CLOCK SPRING "NARROW"	1	KMEM
BA-50-7155		18" STEERING WHEEL - 4 SPOKE - "NARROW"	1	KMEM
BA-50-9000		ROAD SAFETY KITS	1	KMEM
		****** HEADER, RM LADDER CHASSIS ELECTRICAL, 100" PREDATOR (OPTIONS)**	**1**	**KMEM**
		****** HEADER, RM LADDER W/ PUMP BODY ELECTRICAL (OPTIONS)**	**1**	**KMEM**
BE-01-0005		PREDATOR CHASSIS ELECTRICAL SYSTEM DESCRIPTION	1	KMEM
BE-01-0105		PREDATOR CHASSIS WIRING INSTALLATION	1	KMEM
BE-01-0150		DIRECT BATTERY GROUNDING STRAP - PREDATOR	1	KMEM
BE-01-0153		EMI/RFI PROTECTION	1	KMEM
BE-01-0205		PREDATOR 12 VOLT ELECTRICAL SYSTEM TESTING	1	KMEM
BE-05-0353		CLASS-1 ES-KEY MULTI-PLEXED ELECTRICAL SYSTEM 100" PREDATOR	1	KMEM
BE-05-0450		CLASS-1 ES-KEY ULTRAVIEW 450 DISPLAY	1	KMEM
BE-05-0800		INTER-LOCK MODULE FOR MULTIPLEX SYSTEM	1	KMEM
BE-05-0900		CHASSIS DIAGNOSTICS SYSTEM	1	KMEM
BE-05-1160		VOLTAGE MONITORING SYSTEM - 12 VOLT	1	KMEM
BE-05-1165		INDICATOR LIGHT AND ALARM PROVE-OUT SYSTEM	1	KMEM
BE-05-1170		SEQUENCER	1	KMEM
BE-05-1175		ELECTRICAL HARNESS INSTALLATION - 12 VOLT	1	KMEM
BE-10-0487		DELCO REMY 40SI, 320 AMP BRUSHLESS ALTERNATOR	1	KMEM
BE-15-0680		BATTERIES - FIVE (5) EXIDE GROUP 31, 925CCA	1	KMEM
BE-15-1105		PREDATOR BATTERY STORAGE, STEEL, MFD, XMFD, LFD, XLFD	1	KMEM
BE-15-1500		BATTERY DISCONNECT SWITCH, ALL UNITS	1	KMEM
BE-15-1555		COLE HERSEE BATTERY JUMPER STUDS, DS BATTERY BOX	1	KMEM
BE-20-1600		12 VOLT POLARIZED CHARGE RECEPTACLE	1	KMEM
BE-20-1715		SHORELINE RECEPTACLE LABEL - NFPA	1	KMEM
BE-20-1750		SHORELINE LOCATION - ADJACENT TO DRIVER'S DOOR	1	KMEM
BE-30-0100		CONTROL SWITCHING - EATON MULTIPLEX SWITCHES - 12 ABOVE DRIVER	1	KMEM
BE-30-0120		CONTROL SWITCHING - EATON MULTIPLEX SWITCHES - 9 LOWER PANEL	1	KMEM
BE-30-2500		CONTROL SWITCHING LABELING	1	KMEM
BF-00-0505		WELDON #8080-0000-13 WHITE/RED HALOGEN INTERIOR LIGHTS (4)	1	KMEM
BF-00-5000		DOOR OPEN INDICATOR W/ INTEGRAL AUDIBLE ALARM	1	KMEM
		****** HEADER, 12V POWER/ USB CHARGING/ POWER - GROUND CIRCUITS, CUSTOM ******	**1**	**KMEM**
BF-01-6000		12 VOLT POWER AND GROUND CIRCUIT FOR ACCESSORIES IN DASH	1	KMEM
		****** HEADER, REAR/SIDE VISION CAMERA SYSTEMS ******	**1**	**KMEM**
BF-20-0000		DUAL HEADLIGHTS, HALOGEN, PREDATOR - DUAL BEZELS	1	KMEM
BF-20-0320		DAYTIME RUNNING LIGHTS, ALL CABS	1	KMEM
BG-00-0055		DUAL MODULE w/ CODE 3 65STA LED TURN SIGNAL & REQ WARN LIGHT	1	KMEM
BG-00-0400		CUST RM LADDER CHASSIS LED MARKER LIGHTS	1	KMEM
BG-00-0500		CUST RM LADDER BODY LED MARKER LIGHTS	1	KMEM
BG-00-1210		WELDON #9186 LED MARKER LIGHTS @ FRONT ROOF EDGE OF CAB	1	KMEM
BG-00-1600		TRUCK-LITE MARKER LIGHTS @ EA SIDE OF CAB, ADJACENT TO DRIVER DOOR	1	KMEM
BG-00-1610		TRUCK-LITE MARKER/TURN LIGHTS @ EA SIDE OF BODY	1	KMEM
BG-00-1660		TRUCK-LITE MARKER LIGHTS @ REAR OF BODY	1	KMEM

PART NO	S	DESCRIPTION	QTY	ID
BG-00-1800		TRUCK-LITE DOT AMBER REFLECTORS @ SIDE OF BODY	1	KMEM
BG-00-1810		TRUCK-LITE DOT RED REFLECTORS @ REAR OF BODY	1	KMEM
BG-00-2915		TECNIQ #L10 LED LICENSE PLATE LIGHT @ DS REAR OF BODY	1	KMEM
BG-02-1500		WELDON #2010 HAL. BRAKE, REVERSE, & TURN	1	KMEM
BH-04-1050		CAB STEP LIGHTS, TECNIQ EON 3 LED, ALL DEVICES	4	KMEM
BH-04-1130		BODY STEP LIGHTS, TECNIQ EON 3 LED, ALL DEVICES	4	KMEM
BH-05-1625		DUNNAGE AREA LIGHTING, TECNIQ EON 3 LED	1	KMEM
BH-05-2300		AERIAL ACCESS LADDER ILLUMINATION - WHELEN 3" LED - RM BODY	1	KMEM
	>	****** HEADER, HOSE BED LIGHTING ******	**1**	**KMEM**
BH-06-0100		UNITY HOSE BED LIGHTS, ALL DEVICES	1	KMEM
BH-06-2200		HOSE BED WORK LIGHT - SWITCH	1	KMEM
		****** HEADER, SCENE LIGHTS - CUSTOM CHASSIS ******	**1**	**KMEM**
		****** HEADER, SCENE LIGHTS - LADDER/PLATFORM W/ PUMP**	**1**	**KMEM**
BH-11-0500		NFPA (4) JW SPEAKER LED RECTANGLE GROUND LIGHTS, BELOW CAB DOORS	1	KMEM
BH-11-0560		GROUND LIGHTS, 2 LED BELOW PUMP PANEL RUNNING BOARD - RH	1	KMEM
BH-11-0585		GROUND LIGHTS, 2 LED, AT REAR BODY CORNERS - RH	1	KMEM
		****** HEADER, BROW AND CAB RADIUS LIGHTS - CUSTOM CHASSIS**	**1**	**KMEM**
		****** HEADER, TELESCOPING LIGHTS, REAR OF CAB - CUSTOM CHASSIS**	**1**	**KMEM**
BI-00-0200		AERIAL BODY ELECTRICAL SYSTEM	1	KMEM
BI-00-0205		AERIAL BODY ELECTRICAL JUNCTION COMPARTMENT	1	KMEM
BI-00-0210		REAR-MOUNT, AERIAL DEVICE ELECTRICAL JUNCTION COMPARTMENT	1	KMEM
BI-00-0525		BODY ELECTRICAL HARNESS - ES-KEY	1	KMEM
BJ-00-5115		PUMP ENCLOSURE WORK LIGHTS - TECNIQ LED	1	KMEM
BJ-00-5165		ENGINE COMPARTMENT WORK LIGHTS - TECNIQ LED	1	KMEM
		COMPARTMENT LIGHTS - AERIAL TANDEM AXLE	**1**	**KMEM**
BJ-02-1055	>	COMPT. LIGHTS, TECNIQ E18 LED	12	KMEM
		****** HEADER, 12V BODY FLOOD LIGHTING - RM LAD/PLAT/WT W/ PUMP ******	**1**	**KMEM**
		****** CUSTOM REAR MOUNT AERIAL NFPA WARNING LIGHT PACKAGE**	**1**	**KMEM**
BL-95-0000		NFPA COMPLIANT WARNING LIGHT PACKAGE - ALL UNITS	1	KMEM
BL-95-0100		LIGHT PACKAGE ACTUATION/CONTROLS - ALL UNITS	1	KMEM
BL-98-0000		WARNING LIGHT FLASH PATTERN - NFPA FLASH PATTERN	1	KMEM
BM-00-0200		CODE 3 UPPER PACKAGE - CUSTOM REAR MOUNT AERIAL	1	KMEM
BM-02-0072		A-UPPER, CODE 3 LED 2718NFPA1, RX 2700 18" PRIZM II BAR PAIR	1	KMEM
BM-02-1000		C-UPPER, CODE 3 HALOGEN 550 BEACONS, RED DRIVER, AMBER OFFICER	1	KMEM
BM-02-2000		B/D-UPPER REAR, COVERED BY LIGHTS IN ZONE C-UPPER	1	KMEM
BM-02-3000		B/D-UPPER FRONT, COVERED BY LIGHTS IN ZONE A-UPPER	1	KMEM
BM-07-0200		CODE 3 LOWER PACKAGE - CUSTOM REAR MOUNT AERIAL	1	KMEM
BM-09-0018	>	A-LOWER FRONT, CODE 3 65 SERIES LED	1	KMEM
BM-09-0098		A-LOWER FRONT MOUNTING, CUSTOM CHASSIS	1	KMEM
BM-09-1014	>	C-LOWER REAR, CODE 3 65 SERIES LED	1	KMEM
BM-09-2006	>	B/D-LOWER FRONT, CODE 3 65 SERIES LED	1	KMEM
BM-09-2098		B/D-LOWER FRONT MOUNTING, CUSTOM CHASSIS	1	KMEM
BM-09-3006	>	B/D-LOWER MID, CODE 3 65 SERIES LED	1	KMEM
BM-09-3506	>	B/D-LOWER SECONDARY MID, CODE 3 65 SERIES LED	1	KMEM
BM-09-4006	>	B/D-LOWER REAR, CODE 3 65 SERIES LED	1	KMEM
BM-15-0000		LIGHT PACKAGE NFPA CERTIFICATION - ALL UNITS	1	KMEM
		****** HEADER, OPTIONAL WARNING LIGHTS**	**1**	**KMEM**
		****** HEADER, AUDIBLE WARNING & COMMUNICATION EQUIPMENT**	**1**	**KMEM**
BW-00-0510		CHASSIS SINGLE ELECTRIC (DOT) HORN	1	KMEM
BW-00-0560		CODE 3, #CA278, BACK-UP ALARM - 87DBA	1	KMEM
BW-00-5000	>	DUAL CHROME AIR HORNS	1	KMEM
BW-00-5100		DUAL AIR HORNS RECESSED IN FRONT BUMPER, STD	1	KMEM
BW-00-5200		AIR HORN CTRL - FOOT FOR OFFICER & STEERING WHEEL FOR DRIVER	1	KMEM
BW-01-0120		SIREN, WHELEN # 295HFS2, 100W - FLUSH MOUNT	1	KMEM
BW-01-1020		ONE (1) WHELEN SA315P SPEAKER	1	KMEM
		****** HEADER, PUMP, TANK & ACC, 109' MD 4-SECT, TA RM, X-HI**	**1**	**KMEM**
DC-00-2330		WATEROUS CSU-C20-1250 SINGLE STAGE PUMP	1	KMEM
DC-01-4600		WATEROUS PUMP PACKING	1	KMEM
DC-01-6210		WATEROUS "C20" PUMP DRIVE UNIT, ALL WATEROUS MID-SHIP PUMPS	1	KMEM

PART NO	S	DESCRIPTION	QTY	ID
DC-01-6490		PUMP RATIO (HALE, WATEROUS OR DARLEY)	1	KMEM
DC-01-7140		WATEROUS AIR SHIFT	1	KMEM
DC-01-8590		PUMP SHIFT MANUAL OVERRIDE (HALE, WATEROUS OR DARLEY)	1	KMEM
DC-01-8615		WATEROUS PUMP SHIFT INDICATOR LIGHTS	1	KMEM
DC-01-9020		TRANSMISSION LOCK-UP (HALE, WATEROUS OR DARLEY)	1	KMEM
DC-02-1900		PUMP MOUNTS - MID-SHIP PUMPS	1	KMEM
DC-02-1990		PUMP INSTALLATION - CUSTOM	1	KMEM
		****** HEADER, WATEROUS CSU, CMU, PRESSURE CONTROL**	**1**	**KMEM**
DC-05-1225		FIRE RESEARCH "IN CONTROL" TGA-300 PRESSURE GOVERNOR	1	KMEM
DC-05-1295		TASK FORCE TIPS #A18 SERIES INTAKE RELIEF VALVE	1	KMEM
DC-05-2500		PUMP UL CERTIFICATION - 750 GPM & UP	1	KMEM
		WATEROUS, PUMP PRIMING PUMP AND CONTROLS	**1**	**KMEM**
DC-05-3680	>	TRIDENT "MANUAL" AIR PRIMING SYSTEM	1	KMEM
		WATEROUS, DRAINS & ACCESSORES	**1**	**KMEM**
DC-05-5110		ROTARY MASTER DRAIN VALVE	1	KMEM
DC-05-5400		DRAINS/BLEEDER "INNOVATIVE CONTROLS" LIFT UP @ ALL 1-1/2" OR LARGER	1	KMEM
DC-05-5500		SYNFLEX SUCTION, DISCHARGE, PRESSURE AND CONTROL LINES	1	KMEM
DC-05-6220		WATEROUS ANODE BLOCKS - 2 TOTAL	1	KMEM
DC-10-2002		SIDE MOUNT PUMP MODULE, MD, RM AERIAL	1	KMEM
DC-10-2500		PUMP MODULE - STEEL CONSTRUCTION	1	KMEM
		****** HEADER, SUCTIONS - REARMOUNT TA-MD, SIDE MOUNT**	**1**	**KMEM**
DC-14-3200		WATEROUS MAIN SUCTION INLETS 6" NST, 1250 GPM CSU PUMP	1	KMEM
DC-14-5300		SHORT NECK MAIN PUMP SUCTION INLETS - DS & OS	1	KMEM
DC-14-5560	>	6" NST MAIN PUMP SUCTION PRESSURE VENTED CAPS (2)	1	KMEM
		HEADER - AUXILIARY SUCTION/S - AERIALS	**1**	**KMEM**
DC-20-1000		2 1/2" AUX. SIDE SUCTION @ DS PANEL TO REAR OF MAIN INLET	1	KMEM
DC-20-1100		2 1/2" AKRON #8800 S.S. BALL VALVE, DS REAR AUX SUCTION	1	KMEM
DC-20-1200		SWING CONTROL @ VALVE, DS REAR AUX SUCTION	1	KMEM
DC-20-9500		BEHIND PANEL MOUNT	1	KMEM
		****** HEADER - TANK TO PUMP - MD REARMOUNTS**	**1**	**KMEM**
DC-25-1200		TANK TO PUMP - 3" VALVE - LADDERS & PLATFORMS	1	KMEM
DC-25-3110		3" AKRON #8800 SERIES - S.S. BALL, VALVE , TANK TO PUMP	1	KMEM
DC-25-5110		3" PUSH/PULL CONTROL FOR TANK TO PUMP	1	KMEM
		****** HEADER - TANK FILL - MD REARMOUNT**	**1**	**KMEM**
DC-30-2100		TANK FILL LINE 2" FROM PUMP - SIDE MOUNT	1	KMEM
DC-30-2300		2" AKRON #8800 SERIES - S.S. BALL TANK FILL, SIDE MOUN	1	KMEM
DC-30-6500		PUSH/PULL CONTROL FOR TANK FILL	1	KMEM
		****** DISCHARGES & ACCESSORIES, RM-TA-MD AERIAL - SIDE MOUNT**	**1**	**KMEM**
		DRIVER'S SIDE #1 MAIN DISCHARGE	**1**	**KMEM**
DC-35-0010		DS MAIN DISCHARGE #1 - SIDE MOUNT	1	KMEM
DC-35-0110		2 1/2" AKRON #8800 SERIES - S.S. BALL, DS #1, SIDE MOUNT	1	KMEM
DC-35-1815		DS #1 DISCH - 2 1/2" STRAIGHT NST & 30-DEGREE NST ELBOW	1	KMEM
DC-35-2010		2 1/2" NST PRESSURE VENTED CAP - DS DISCHARGE #1	1	KMEM
DC-35-2410		PUSH/PULL CONTROL FOR DS DISCHARGE #1 -SIDE MOUNT	1	KMEM
DC-35-3110		INNOVATIVE CONTROLS LIQUID FILLED 2 1/2" PRESS GAUGE SS- DS DISCHARGE #1	1	KMEM
		DRIVER'S SIDE #2 MAIN DISCHARGE	**1**	**KMEM**
DC-35-5010		DS MAIN DISCHARGE #2 - SIDE MOUNT	1	KMEM
DC-35-5110		2 1/2" AKRON #8800 SERIES - S.S. BALL, DS #2, SIDE MOUNT	1	KMEM
DC-35-6815		DS #2 DISCH - 2 1/2" STRAIGHT NST & 30-DEGREE NST ELBOW	1	KMEM
DC-35-7010		2 1/2" NST PRESSURE VENTED CAP - DS DISCHARGE #2	1	KMEM
DC-35-7410		PUSH/PULL CONTROL FOR DS DISCHARGE #2 -SIDE MOUNT	1	KMEM
DC-35-8110		INNOVATIVE CONTROLS LIQUID FILLED 2 1/2" PRESS GAUGE SS- DS DISCHARGE #2	1	KMEM
		OFFICER'S SIDE #1 MAIN DISCHARGE	**1**	**KMEM**
DC-39-0010	>	OS MAIN DISCHARGE #1 - SIDE MOUNT	1	KMEM
DC-39-0110		2 1/2" AKRON #8800 SERIES - S.S. BALL, OS #1, SIDE MOUNT	1	KMEM
DC-39-1815		OS #1 DISCH - 2 1/2" STRAIGHT NST & 30-DEGREE NST ELBOW	1	KMEM
DC-39-2010		2 1/2" NST PRESSURE VENTED CAP - OS DISCHARGE #1	1	KMEM

PART NO	S	DESCRIPTION	QTY	ID
DC-39-2410		PUSH/PULL CONTROL FOR OS DISCHARGE #1 -SIDE MOUNT	1	KMEM
DC-39-3110		INNOVATIVE CONTROLS LIQUID FILLED 2 1/2" PRESS GAUGE SS- OS DISCHARGE #1	1	KMEM
		OFFICER'S SIDE #2 MAIN DISCHARGE	**1**	**KMEM**
DC-39-5010	>	OS MAIN DISCHARGE #2 - SIDE MOUNT	1	KMEM
DC-39-5080	>	**** WATEROUS PUMP LDH DISCHARGE PORT ****	1	KMEM
DC-39-5110		2 1/2" AKRON #8800 SERIES - S.S. BALL, OS #2, SIDE MOUNT	1	KMEM
DC-39-6815		OS #2 DISCH - 2 1/2" STRAIGHT NST & 30-DEGREE NST ELBOW	1	KMEM
DC-39-7010		2 1/2" NST PRESSURE VENTED CAP - OS DISCHARGE #2	1	KMEM
DC-39-7410		PUSH/PULL CONTROL FOR OS DISCHARGE #2 -SIDE MOUNT	1	KMEM
DC-39-8110		INNOVATIVE CONTROLS LIQUID FILLED 2 1/2" PRESS GAUGE SS- OS DISCHARGE #2	1	KMEM
		CROSSLAY #1 DISCHARGE	**1**	**KMEM**
DC-47-0400		CROSSLAY #1, 1 1/2" - AERIAL	1	KMEM
DC-47-1110		CROSSLAY #1 CAPACITY - 200' OF 1 3/4" HOSE	1	KMEM
DC-47-1410		CROSSLAY #1 - DOUBLE STACK HOSE DESIGN	1	KMEM
DC-47-1510		1 1/2" NST CHICKSAN SWIVEL - CROSSLAY #1	1	KMEM
DC-47-2110		CROSSLAY #1, PLUMBING, 2" STAINLESS STEEL PIPING	1	KMEM
DC-47-2210		2" AKRON #8800 SERIES - S.S. BALL, VALVE CROSSLAY #1, DISCH	1	KMEM
DC-47-2610		PUSH/PULL 1/4 TURN CONTROL CROSSLAY #1	1	KMEM
DC-47-3210		INNOVATIVE CONTROLS LIQUID FILLED 2 1/2" PRESS GAUGE SS - CROSSLAY #1	1	KMEM
		CROSSLAY #2 DISCHARGE	**1**	**KMEM**
DC-47-5400		CROSSLAY #2, 1 1/2" - AERIAL	1	KMEM
DC-47-6110		CROSSLAY #2 CAPACITY - 200' OF 1 3/4" HOSE	1	KMEM
DC-47-6410		CROSSLAY #2 - DOUBLE STACK HOSE DESIGN	1	KMEM
DC-47-6510		1 1/2" NST CHICKSAN SWIVEL - CROSSLAY #2	1	KMEM
DC-47-7110		CROSSLAY #2, PLUMBING, 2" STAINLESS STEEL PIPING	1	KMEM
DC-47-7210		2" AKRON #8800 SERIES - S.S. BALL, VALVE CROSSLAY #2,	1	KMEM
DC-47-7610		PUSH/PULL 1/4 TURN CONTROL CROSSLAY #2	1	KMEM
DC-47-8210		INNOVATIVE CONTROLS LIQUID FILLED 2 1/2" PRESS GAUGE SS - CROSSLAY #2	1	KMEM
		CROSSLAY & SPEEDLAY OPTIONS - RM AERIAL	**1**	**KMEM**
DC-50-7015	>	VINYL CROSS LAY COVER	1	KMEM
DC-50-7030		CROSSLAY COVER RED IN COLOR	1	KMEM
	>	**WATERWAY DISCHARGE**	**1**	**KMEM**
DC-62-0215		AERIAL WATERWAY DISCHARGE - TA-MD AERIAL	1	KMEM
DC-62-1130		WATERWAY DISCHARGE, PLUMBING, 4" STAINLESS STEEL - RM	1	KMEM
DC-62-1230		3" AKRON #8800 SERIES - S.S. BALL, VALVE WATERWAY	1	KMEM
DC-62-1610		PUSH/PULL 1/4 TURN CONTROL FOR WATERWAY	1	KMEM
DC-62-2210		INNOVATIVE CONTROLS LIQUID FILLED 2 1/2" PRESS GAUGE SS - WATERWAY	1	KMEM
		PUMP PANELS & ACCESSORIES	**1**	**KMEM**
DD-65-0505		SIDE MOUNT PUMP PANEL - RM AERIAL	1	KMEM
DD-65-4115		SIDE MOUNT PANELS - 12 GAUGE BRUSHED STAINLESS STEEL	1	KMEM
DD-65-4710		VERTICALLY HINGED GAUGE PANEL - SIDE MOUNT	1	KMEM
DD-65-4810		OFFICER SIDE VERTICALLY HINGED PUMP ACCESS DOOR - SIDE MOUNT	1	KMEM
DD-65-5150		PANEL FASTENERS	1	KMEM
DD-65-5510		CAPS AND ADAPTERS SAFETY TETHER - BALL CHAIN	1	KMEM
DD-65-8820		PUMP PANEL DISCH./SUCTION TRIM PLATES, HIGH POLISHED	1	KMEM
DD-65-9000		DISCHARGE GAUGE TRIM BEZELS	1	KMEM
DD-65-9110		IDENTIFICATION PLATES	1	KMEM
DD-66-0100		PUMP OPERATOR'S PANEL LIGHT SHIELD	1	KMEM
DD-66-0135		TECNIQ E18 LED LIGHTS - LIGHT SHIELD	1	KMEM
DD-66-2100		OS PUMP PANEL LIGHTING	1	KMEM
DD-66-2130		TECNIQ EON 3 LED LIGHTS - OS PUMP PANEL	1	KMEM
		PUMP OPERATOR'S PANEL - SIDE MOUNT, AERIAL	**1**	**KMEM**
DD-70-2334		FIRE RESEARCH "IN CONTROL" PRESSURE GOVERNOR CONTROL @ PANEL	1	KMEM
DD-70-2410		PUMP PRESSURE & VACUUM TEST PORTS @ PANEL	1	KMEM

PART NO	S	DESCRIPTION	QTY	ID
DD-70-4125	>	DELETE - MASTER PRESSURE & COMPOUND GAUGES	1	KMEM
DD-70-4130		**** CONSIDER DELETING MASTER GAUGES - IN GOVERNOR DISPLAY ****	1	KMEM
DD-70-4680		PRESSURE & COMPOUND GAUGE RANGES - SINGLE STAGE	1	KMEM
DD-70-4900		AUXILIARY ENGINE COOLER	1	KMEM
		WATER TANK LEVEL GAUGE - AERIAL	**1**	**KMEM**
DD-72-0210		IC, SL ULTRA-BRIGHT 10 LIGHT LED WATER TANK GAUGE - PUMP	1	KMEM
DD-72-1100	>	IC WATER LEVEL - 1/4" NPT PRESS TRANSDUCER @ BOTTOM OF TANK	1	KMEM
DD-80-0110		SLIDE-OUT STEP @ DRIVER'S PUMP OPERATOR'S PANEL	1	KMEM
DE-00-1015	>	**** HEADER, 109' MD TA, WATER TANK	1	KMEM
		WATER TANKS/OPTIONS AERIALS	**1**	**KMEM**
DE-05-1700	>	UPF POLYIIE TANK, 300 GAL. - AERIAL	1	KMEM
DE-05-6000		TANK DESCRIPT, CONSTR AND MOUNT, UPF POLY IIE TANK	1	KMEM
JA-00-0100		BODY AND COMPARTMENT HEADER (ALL AERIAL DEVICES)	1	KMEM
JA-00-5020		GEN. 3/16" ALUM BODY DESCRIPT REAR MNT. LADDERS, HEAVY DUTY	1	KMEM
TF-02-4030		COMPARTMENTATION, 109 TA STYLE #1H-HI	1	KMEM
		**** HEADER, 103-RM BODY OPTIONS (WITH PUMP)**	**1**	**KMEM**
TF-10-0100		BEVELED OVERLAPPING DOORS, ALL COMPARTMENTS, ALL DEVICES	1	KMEM
TF-10-1900		BRUSHED FINISHED DOOR PANS - 2" THICK DOORS	1	KMEM
TF-10-2700		DOOR HINGE FOR BEVELED OVERLAPPING HINGED DOORS	1	KMEM
TF-10-2800		DOOR SEAL FOR BEVELED OVERLAPPING HINGED DOORS	1	KMEM
TF-10-2940		ROTARY LATCHES WITH D-RING HANDLES	1	KMEM
TF-10-3150		GAS SHOCK ON HORIZONTALLY & VERTICALLY HINGED DOORS	1	KMEM
TF-10-6000		COMPARTMENT FLOORS (AERIALS ONLY)	1	KMEM
TF-11-0500		COMPARTMENT GENERAL DESCRIPTION, ALL LADDERS & PLATFORMS	1	KMEM
TF-11-1441		PAINTED REAR BODY PANEL, RM	1	KMEM
TF-11-2310		109 1/2 WIDTH S. S. OUTRIGGER COVER PANEL	1	KMEM
TF-11-3045		BODY RUB RAILS, C-CHANNEL	1	KMEM
TF-12-1000		RUNNING BOARD STEPS (AERIALS ONLY)	1	KMEM
TF-13-3000		REAR BODY MODULE, REAR MOUNTS A-FRAME ONLY	1	KMEM
TF-13-3100		REAR MOUNT, TURNTABLE A-FRAME LADDER STEPS (MD)	1	KMEM
TF-13-5000		REAR-MOUNTS, BODY HANDRAILS, EXTRUDED ALUMINUM, A-FRAME BODY	1	KMEM
TF-14-1000		ALUMINUM WHEEL WELL LINERS	1	KMEM
TF-14-1710		POLISHED ALUMINUM FENDERETTES, TANDEM AXLE BODIES	1	KMEM
TF-14-5000		REAR MUD FLAPS	1	KMEM
TF-14-6700		PAINTED REAR TOW EYES, BELOW BODY - REARMOUNT AERIALS	1	KMEM
TF-15-1020		HOSE BED, REAR MOUNT AERIALS, 75-100 HIGH BODY	1	KMEM
TF-15-1900		ALUMINUM HOSE BED FLOORING - AERIAL	1	KMEM
TF-15-2020	>	HOSE CHUTE, RIGHT CENTER	1	KMEM
TF-15-3110		HOSE BED COVER, VINYL WITH QTR TURNS	1	KMEM
TF-15-3190		HYPALON MATERIAL RED IN COLOR	1	KMEM
		**** HEADER, COMPARTMENT ACCESSORIES - REARMOUNTS**	**1**	**KMEM**
	>	**"NOTE" READ THIS BEFORE ADDING ANY ADDITIONAL GROUND LADDERS**	**1**	**KMEM**
		**** HEADER, 79-100-109-TA-HI GROUND LADDERS**	**1**	**KMEM**
TN-00-5020	>	CENTER LADDER STORAGE, 79-100-109 TA REAR MOUNT	1	KMEM
TN-00-7020		ROLL-UP DOOR - BRUSHED, LADDER COMPARTMENT, REAR MOUNT ONLY	1	KMEM
TN-01-0120		ALCO-LITE 115' LADDER COMP, 79-100-109 TA REAR MOUNT	1	KMEM
TN-02-1110		ALCO-LITE PEL3-35 35' 3-SECTION EXTENSION LADDER (ALUM)	1	KMEM
TN-02-1170		ALCO-LITE PEL-24 24' 2-SECTION EXTENSION LADDER (ALUM)	1	KMEM
TN-02-2510		ALCO-LITE PRL-16 16' ROOF LADDER W/FOLDING HOOKS (ALUM)	2	KMEM
TN-02-7000		ALCO-LITE AEL-14 14' ATTIC EXTENSION LADDER (ALUM)	1	KMEM
TN-02-8010		ALCO-LITE FL-10 10' FOLDING ATTIC LADDER (ALUM)	1	KMEM
		**** HEADER, PIKE POLES & HOLDERS - AERIALS**	**1**	**KMEM**
TN-20-0000		ADDITIONAL ITEMS SHIPPED WITH VEHICLE, ALL AERIAL DEVICES	1	KMEM
		**** HEADER, LOOSE EQUIPMENT - AERIAL**	**1**	**KMEM**
TN-35-1015		TWO (2) ZICO #SAC-44 FOLDING WHEEL CHOCKS, (2) MTD DRIVER SIDE	1	KMEM
		**** HEADER, 109' H.D. 4-SECTION AERIAL LADDER, TANDEM AXLE**	**1**	**KMEM**
TQ-00-0650		109' M.D. AERIAL LADDER, GEN., INTENT & DESIGN STANDARDS	1	KMEM
TQ-00-3000		MOUNTING OF AERIAL, REAR MOUNTS	1	KMEM
TQ-00-3230		HEIGHT AND REACH, 109' 4-SECT. MD AERIAL LADDER	1	KMEM
TQ-00-4000		MATERIAL STANDARDS, ALL DEVICES	1	KMEM

PART NO	S	DESCRIPTION	QTY	ID
TQ-00-5010		109' H.D. AERIAL LADDER, HYDRAULIC SYSTEM	1	KMEM
TQ-00-5115		PARKER HOSE KIT - 4 JACK UNIT (109)	1	KMEM
TQ-00-6120		HYDRAULIC PUMP - PRESSURE COMPENSATED	1	KMEM
TQ-00-7010		HYDRAULIC RESERVOIR - 40 GALLON	1	KMEM
TQ-00-7065		HYDRAULIC OIL - REGULAR - A/W 46 - 60 GAL	1	KMEM
TQ-00-7110		DIVERTER VALVE, REAR MOUNT DEVICES	1	KMEM
TQ-00-7225		OUTRIGGER HYDRAULIC CONTROL VALVE - RM DO3	1	KMEM
TQ-00-7410		ELECTRIC TURNTABLE HYDRAULIC CONTROL VALVE, RM LADDERS	1	KMEM
TQ-00-7505		HYDRAULIC SYSTEM FILTRATION	1	KMEM
TQ-00-8515		RM LADDER 4-OUTRIGGER, "IQAN" MOTION CONTROL SYSTEM - ELECTRIC CONTROLS @ TT	1	KMEM
TQ-00-8700		HYDRAULIC PUMP PRESSURE - DISPLAY	1	KMEM
TQ-00-8710		ELEVATION ANGLE OF LADDER - DISPLAY	1	KMEM
TQ-00-8715		VERTICAL HEIGHT OF LADDER - DISPLAY	1	KMEM
TQ-00-8725		DEGREE OF ROTATION FROM VEHICLE CENTERLINE - DISPLAY	1	KMEM
TQ-00-8730		E-ZONE CAB & BODY AVOIDANCE WARNING - DISPLAY	1	KMEM
TQ-00-8735		E-ZONE SHORT JACK WARNING - DISPLAY	1	KMEM
TQ-00-8740		CRADLE ALIGNMENT MESSAGE - DISPLAY	1	KMEM
TQ-00-8750		DEVICE LOAD MONITORING - DISPLAY	1	KMEM
TQ-00-8760		E-SPEED LADDER TIP SPEED CONTROL - DISPLAY	1	KMEM
TQ-00-8765		E-CUSH RAMP CONTROL FOR ELEVATION - DISPLAY	1	KMEM
TQ-00-8770		E-CUSH RAMP CONTROL FOR EXTENSION & RETRACTION - DISPLAY	1	KMEM
TQ-00-8890		WARNING MESSAGES - TURNTABLE ONLY	1	KMEM
TQ-00-9510		109' H.D. AERIAL LADDER, EMERGENCY HYDRAULIC PUMP, EPU	1	KMEM
TQ-01-1000		HOT SHIFT PTO W/CONTROLS IN CAB	1	KMEM
TQ-01-1100		FAST IDLE CONTROL FOR ALL AERIAL DEVICES	1	KMEM
TQ-02-0030		109' H.D. AERIAL LADDER, TORQUE BOX	1	KMEM
TQ-02-1030		109' H.D. AERIAL OUTRIGGERS - 14'	1	KMEM
TQ-02-1630		109' H.D. LADDER OUTRIGGERS - HORIZONTAL CYLINDER	1	KMEM
TQ-02-1860		109' HD LADDER OUTRIGGERS - VERTICAL CYLINDERS - EXTENDED STROKE	1	KMEM
TQ-02-2010		EXTENDED OUTRIGGER PENETRATION - 11 DEGREES	1	KMEM
TQ-02-2110		IQAN - OUTRIGGER STRING POTENTIOMETER - FOUR (4) OUTRIGGERS	1	KMEM
TQ-02-2200		OUTRIGGER/JACK FOOT PADS, FOUR (4) JACK DEVICES	1	KMEM
TQ-02-2350		AUXILARY JACK PADS, FOUR (4) 24" X 24" x 1" POLY	1	KMEM
TQ-02-2500		OUTRIGGER INTERLOCK SYSTEM & ALARM, ALL DEVICES	1	KMEM
		****** HEADER - OUTRIGGER LIGHTING, FOUR (4) OUTRIGGERS**	**1**	**KMEM**
TQ-02-5100		NO LOLLIPOP LIGHTS ON OUTRIGGER BEAMS	1	KMEM
TQ-02-5220		HALOGEN OUTRIGGER GROUND LIGHTS - RECTANGLE, 4-OUTRIGGERS	1	KMEM
TQ-02-5275		OUTRIGGER WARNING LIGHTS FROM LIGHT PACKAGE	1	KMEM
TQ-02-6005		OUTRIGGER WARNING LIGHT ACTIVATION, PRIMARY WARNING	1	KMEM
TQ-02-6800		OUTRIGGER SCOTCHLITE, WHITE	1	KMEM
TQ-02-7025		RM LADDER, BUTTON OUTRIGGER CONTROLS - FOUR JACKS	1	KMEM
TQ-02-9200		OUTRIGGER LEVEL SIDE TO SIDE, ALL REAR MOUNT DEVICES	1	KMEM
TQ-03-0200		109' H.D. AERIAL LADDER, TURNTABLE	1	KMEM
TQ-03-3010		TURNTABLE DECK - ALUMINUM TREADPLATE	1	KMEM
TQ-04-1852		HEEL PIN STEP ON TURNTABLE, 79', 103', 109' & 123' & 100' M.M. LADDERS	1	KMEM
TQ-04-1855		TURNTABLE HANDRAILS, KNURLED ALUMINUM, 3-SIDES	1	KMEM
TQ-04-2117		HEEL PINS - 109'	1	KMEM
TQ-04-2300		STAINLESS STEEL CRADLE ALIGNMENT ARROWS ON TURNTABLE	1	KMEM
TQ-04-2800		SAFETY CHAINS BETWEEN TURNTABLE HANDRAIL, REAR MOUNTS & TDA	1	KMEM
TQ-04-5150		109' H.D. AERIAL LADDER, TURNTABLE SWIVEL	1	KMEM
TQ-04-9000		IQAN - SWIVEL ROTATION ENCODER	1	KMEM
TQ-06-0130		109' H.D. LADDER, LADDER CONSTRUCTION	1	KMEM
TQ-06-0900		STAINLESS STEEL EGRESS W/TIP SKID GAURDS	1	KMEM
TQ-06-1075		109' H.D. 4-SECTION, LADDER DIMENSIONS	1	KMEM
TQ-06-3000		RUNG COVERS - PHOTOLUMINESCENT, ALL DEVICES	1	KMEM
TQ-06-4005		SINGLE PAIR FOLDING STEPS @ LADDER TIP	1	KMEM
TQ-06-4100		RED SCOTCHLITE MATERIAL ON LAST 6' OF LADDER TIP	1	KMEM
TQ-06-9000		AERIAL TRAVEL SUPPORT, ALL DEVICES	1	KMEM

PART NO	S	DESCRIPTION	QTY	ID
TQ-06-9020		CRADLE ILLUMINATION LIGHTS - HALOGEN LIGHTS	1	KMEM
TQ-07-0250		109' H.D. AERIAL LADDER, ELEVATION SYSTEM	1	KMEM
TQ-07-2800		IQAN - INCLINOMETER	1	KMEM
TQ-07-2801		IQAN - MOMENT LOAD INDICATOR	1	KMEM
TQ-07-2805		IQAN - E-CUSH CONTROL, ELEVATION SYSTEM - LADDER	1	KMEM
TQ-08-0250		109' H.D. AERIAL LADDER, ROTATION SYSTEM	1	KMEM
TQ-08-2800		ROTATION MOTOR AND BRAKE - 41" EXTERNAL BEARINGS	1	KMEM
TQ-08-2950		SWING DRIVE ADJUSTMENT	1	KMEM
TQ-08-3000		IQAN - "E-SPEED" SAFETY SYSTEM, LADDERS	1	KMEM
TQ-08-3110		IQAN - "E-ZONE" ROTATION SAFETY SYSTEM, 4-OUTRIGGERS	1	KMEM
TQ-08-3650		IQAN - "E-ZONE" CAB & BODY PROXIMITY SYSTEM - LADDERS	1	KMEM
TQ-09-0250		109' H.D. AERIAL LADDER, EXTENSION/RETRACTION SYSTEM	1	KMEM
TQ-09-2350		EXTENSION CYLINDERS PAINTED LADDER PAINT COLOR	1	KMEM
TQ-09-2800		IQAN - EXTENSION SYSTEM STRING POTENTIOMETER	1	KMEM
TQ-09-2810		IQAN - "E-CUSH" EXTENSION/RETRACTION SYSTEM - LADDERS	1	KMEM
TQ-09-3030		LADDER SLIDE PADS, 109' LADDER	1	KMEM
		LADDER EXTENSION NUMBERS, ALL DEVICES	**1**	**KMEM**
TQ-09-3150		LADDER LEVEL INDICATOR (BASE SECTION) - LIGHTED	1	KMEM
TQ-09-3217		LADDER, CABLE/HOSE/WIRE ROUTING, 109' LADDER	1	KMEM
		****** HEADER - LADDER, 120 VOLT ELECTRICAL SYSTEM & ACCESSORIES**	**1**	**KMEM**
TQ-10-0100		LADDER, 120 VOLT ELECTRICAL SYSTEM	1	KMEM
TQ-10-0125		DELETE LADDER TIP RECEPTACLE	1	KMEM
		****** HEADER - LADDER, 12 VOLT ELECTRICAL SYSTEM & ACCESSORIES**	**1**	**KMEM**
TQ-10-1018		HEEL PIN STEP LIGHTS - TECNIQ EON 3 LED LIGHTS	1	KMEM
TQ-10-1040		TURNTABLE CONTROL CONSOLE LIGHTING - LUMA BAR LED H2O	1	KMEM
TQ-10-1060		TURNTABLE CONSOLE STEP LIGHT - TECNIQ EON 3 LED	1	KMEM
TQ-10-1110		TWO (2) UNITY SPOTS @ LADDER BASE SECTION	1	KMEM
TQ-10-1210		ONE (1) UNITY SPOT & ONE (1) FLOOD @ LADDER TIP	1	KMEM
TQ-12-0010		LADDER, CONTROL STATION	1	KMEM
TQ-12-0020		RM LADDERS, CONSOLE LOCATED @ LH SIDE OF TURNTABLE, STD	1	KMEM
TQ-12-0085		PAINTED ALUMINUM TURNTABLE CONSOLE - MATCH LADDER COLOR	1	KMEM
TQ-12-0250		109' H.D. AERIAL LADDER, TURNTABLE CONTROL STATION	1	KMEM
TQ-12-2520		FIRE RESEARCH INSIGHT FLOWMETER @ TURNTABLE CONSOLE	1	KMEM
TQ-12-2595		TURNTABLE CONSOLE COVER - PAINTED RADIUS	1	KMEM
TQ-14-1200		LADDER, FIRE RESEARCH ACT -2 WAY COMMUNICATION SYSTEM - LOWER CONTROL	1	KMEM
TQ-14-1205		LADDER, FIRE RESEARCH ACT 2-WAY COMMUNICATION SYSTEM - UPPER SPEAKER/MIC	1	KMEM
TQ-18-0100		109' H.D. AERIAL LADDER, LADDER WATERWAY SYSTEM	1	KMEM
TQ-18-1030		109' H.D. AERIAL LADDER, LADDER WATERWAY	1	KMEM
TQ-18-2525		4" HEEL PIN SWIVEL - 109' LADDER	1	KMEM
TQ-18-2600		AUTOMATIC WATER DRAIN/VENT	1	KMEM
TQ-18-3000		ALL DEVICES, WATERWAY RELIEF VALVE	1	KMEM
TQ-18-3015		REAR MOUNT AERIAL WATERWAY DRAIN, 1 1/2" VALVE	1	KMEM
TQ-18-3150		4" NST REAR AERIAL WATERWAY INLET ADAPTER, REAR MOUNTS	1	KMEM
TQ-18-3800		INNOVATIVE CONTROLS 2 1/2" GAUGE FOR AERIAL INLET, REAR MOUNTS	1	KMEM
TQ-18-4130	>	LADDER, AKRON #3480 "STREAMMASTER II" MONITOR	1	KMEM
TQ-18-4210	>	LADDER, AKRON #5178 NOZZLE	1	KMEM
TQ-18-4300		LADDER, AKRON MONITOR CONTROLS W/ AUTO STOW	1	KMEM
TQ-18-4505		LADDER, ELECTRIC SELECTABLE WATERWAY TROLLEY - NEW	1	KMEM
TQ-18-4950		"STORE FRONT BLITZ" DESCRIPTION	1	KMEM
TQ-20-0250		109' H.D. AERIAL LADDER, LADDER CAPACITIES, TANDEM AXLE	1	KMEM
TQ-50-0100		FIRE DEPT AERIAL FAMILIARIZATION - PROVIDED BY FACTORY	1	KMEM
TQ-50-0130		FACTORY FAMILIARIZATION - THREE (3) DAYS	1	KMEM
TQ-50-0600		AERIAL SERVICE, ALL DEVICES	1	KMEM
TQ-50-0700		WARNING DECALS, ALL DEVICES	1	KMEM
TQ-52-0100		AERIAL LADDER, MANUALS, TWO (2) SETS	1	KMEM
TQ-70-0250		109' H.D. AERIAL LADDER, TANDEM AXLE , CERT & TESTING	1	KMEM
		****** HEADER - PAINT SECTION - ALL UNITS ******	**1**	**KMEM**
UA-00-1100		GENERAL PAINT DESCRIPTION - ALL	1	KMEM

PART NO	S	DESCRIPTION	QTY	ID
UA-00-1200		GENERAL PRIMER & PREP DESCRIPTION - LADDER/PLATFORM	1	KMEM
UA-00-1400		GENERAL FINISH PAINT DESCRIPTION - LADDER/PLATFORM	1	KMEM
UA-00-2700		BODY BUFFING & FINISH - LADDER/PLATFORM	1	KMEM
		****** HEADER - LADDER/PLATFORM BODY PAINT ******	**1**	**KMEM**
UA-03-0100		INSIDE/UNDERSIDE BODY PAINTED BLACK - LADDER/PLATFORM	1	KMEM
UA-03-0300		JOB COLOR COMPARTMENT INT W/SPATTER PAINT - LADDER/PLATFORM	1	KMEM
UA-03-0900		SINGLE COLOR BODY PAINT SCHEME - LADDER/PLATFORM	1	KMEM
UA-03-2200		PUMPHOUSE & PLUMBING PAINTED JOB COLOR - LADDER/PLATFORM	1	KMEM
		****** HEADER - TANDEM AXLE CUSTOM CHASSIS PAINT (AERIAL)**	**1**	**KMEM**
UA-05-0050		CUSTOM CAB PRIMER & PREP	1	KMEM
UA-05-0070		CUSTOM FINISH PAINT & PREP	1	KMEM
UA-05-0100		SINGLE COLOR CUSTOM CAB PAINT SCHEME	1	KMEM
UA-05-0350		CUSTOM CAB BUFFING & FINISH	1	KMEM
UA-05-0360		CUSTOM CAB INTERIOR PAINT - TEXTURED GRAY	1	KMEM
UA-05-0400		CUSTOM CHASSIS GLOSS BLACK COLOR FRAME RAILS	1	KMEM
UA-05-0505		CUSTOM CHASSIS WHEEL AND HUB PAINT - TANDEM AXLE	1	KMEM
UA-06-0200		LADDER, PAINTING, ALL DEVICES, WHITE #91528	1	KMEM
UA-06-0450		EXTENSION CYLINDERS PAINTED TO MATCH LADDER COLOR	1	KMEM
UA-06-0905		TORQUEBOX PAINT - BLACK	1	KMEM
UA-06-1100		OUTRIGER PAINT - SILVER URETHABOND 104	1	KMEM
UA-06-1205		TURNTABLE PAINT - LADDER COLOR	1	KMEM
UA-06-1215		TURNTABLE CONSOLE PAINT - LADDER COLOR	1	KMEM
UA-06-1225		LIFT CYLINDERS CONSOLE PAINT - LADDER COLOR	1	KMEM
UA-06-1500		LADDER RUST INHIBITOR - ALL DEVICES	1	KMEM
UA-06-2110	>	PAINT CODE, SINGLE COLOR, FILL IN BLANKS	1	KMEM
UA-06-2130		PAINT CODES, AERIAL DEVICE - WHITE #91528	1	KMEM
UA-06-2200		PINT OF TOUCH-UP PAINT	1	KMEM
UA-06-2510		FINALIZATION & DETAILING - LADDER/PLATFORM	1	KMEM
UA-06-2850		RUSTPROOFING WARRANTY, TEN (10) YEAR	1	KMEM
		****** HEADER, LETTERING & STRIPING - 109-4-RM-MD**	**1**	**KMEM**
UA-12-0100		COMPUTER GENERATED LETTERING	1	KMEM
UA-12-1200		GOLDLEAF W/ DROP SHADOW LETTERING ON FRONT CAB DOORS	1	KMEM
UA-12-1245		3" LETTERING ON FRONT CAB DOORS	1	KMEM
UA-12-3100		GOLDLEAF W/ DROP SHADOW LETTERING ON CAB SIDE PANEL	1	KMEM
UA-12-3145		3" LETTERING ON CAB SIDE PANEL	1	KMEM
UA-13-0100		LETTERING FONT - BASIC BLOCK TYPE FONT	1	KMEM
UA-50-0200		NFPA REQUIRED SCOTCH-LITE STRIPINGSTRIPING - TA AERIAL	1	KMEM
UA-50-0210		4" SCOTCH-LITE STRIPE ON CAB AND BODY - TA AERIAL	1	KMEM
UA-58-5100		WHITE SCOTCH-LITE	1	KMEM
UA-80-6000		REAR CHEVRON STRIPING	1	KMEM
UA-80-6002		50% VERTICAL SURFACE	1	KMEM
UA-80-6030		6" REAR SCOTCH-LITE CHEVRON STRIPING	1	KMEM
UA-80-6070		RUBY RED & LEMON YELLOW SCOTCH-LITE	1	KMEM
		****** PROPOSED - AERIAL WARRANTY PKG, W/PUMP @ REAR OF SPEC**	**1**	**KMEM**
W6-00-000J		PROPOSED - KME WARRANTY, STARTING ON DELIVERY DATE	1	KMEM
W6-00-0010	**X** <	PROPOSED - 5 YEAR FCAM WARRANTY - CUSTOM CHASSIS	1	
		$19,500 per email Phil to Byron 9-27-16		
W6-00-003M	>	PROPOSED - 5 YEAR WARRANTY - BASE WITH CUSTOM CHASSIS	1	KMEM
W6-00-0150		PROPOSED - 5 YEAR CUMMINS BASE WARRANTY	1	KMEM
W6-00-0210		PROPOSED - 5 YEAR ALLISON EVS TRANSMISSION WARRANTY	1	KMEM
W6-00-0230		PROPOSED - LIFETIME FRAMERAIL WARRANTY	1	KMEM
W6-00-0242		PROPOSED - SHEPPARD STEERING GEAR STANDARD - THREE YEAR WARRANTY	1	KMEM
W6-00-0254		PROPOSED - 5 YEAR MERITOR FRONT AXLE - WARRANTY	1	KMEM
W6-00-0262		PROPOSED - 5 YEAR MERITOR 160 SERIES TANDEM AXLE REAR - WARRANTY	1	KMEM
W6-00-0320	>	PROPOSED - 10 YEAR CAB STRUCTURAL WARRANTY	1	KMEM
W6-00-0330		PROPOSED - 10 YEAR BODY STRUCTURAL WARRANTY	1	KMEM
W6-00-0390		PROPOSED - 10 YEAR CAB & BODY CORROSION WARRANTY	1	KMEM

PART NO	S	DESCRIPTION	QTY	ID
W6-00-0450		PROPOSED - PAINT FINISH WARRANTY, TEN (10) YEAR	1	KMEM
W6-00-0470		PROPOSED - 5 YEAR LETTERING WARRANTY	1	KMEM
W6-00-0490		PROPOSED - 10 YEAR STAINLESS STEEL PIPING WARRANTY	1	KMEM
W6-00-0550		PROPOSED - REAR SUSPENSION - RIDEWELL - AIR RIDE - 3 YEAR WARRANTY	1	KMEM
W6-00-0570		PROPOSED - SAFEGUARD TECHNOLOGY - 10 YEAR - RUNG COVERS	1	KMEM
W6-00-0590		PROPOSED - 20 YEAR AERIAL LADDER WARRANTY	1	KMEM
W6-00-0630	>	PROPOSED - FIVE (5) YEAR AERIAL WATERWAY SWIVEL WARRANTY - AMITY	1	KMEM
W6-00-0670		PROPOSED - AERIAL DEVICE REPAIR POLICY AND LIABILITY DISCLAIMER	1	KMEM
W6-00-0695		PRO - AERIAL DEVICE HYDRAULIC COMPONENT WARRANTIES	1	KMEM
W6-00-0710		PROPOSED - LIFETIME POLY TANK WARRANTY - ALL TANKS	1	KMEM
W6-00-0820		PROPOSED - WATEROUS 5 YEAR PUMP WARRANTY (PARTS & LABOR)	1	KMEM
W6-00-0823	**X**	WATEROUS FCAM 5 YR WARRANTY CORRECTION	1	
W6-00-1153	**S**	DEALER PROVIDES WARRANTY TRANSPORT PROP and REQ	1	DLR
W6-00-1330		PROPOSED - AKRON - 5 YEAR LIMITED WARRANTY	1	KMEM
W6-00-1340		PROPOSED - AKRON HEAVY DUTY VALVE - 10 YEAR WARRANTY	1	KMEM
W6-00-1500		PROPOSED - BOSTROM SEATING 5 YEAR WARRANTY	1	KMEM
WA-00-0010		"AERIAL FIRE APPARATUS" NFPA 2016 STATEMENT OF EXCEPTIONS	1	KMEM

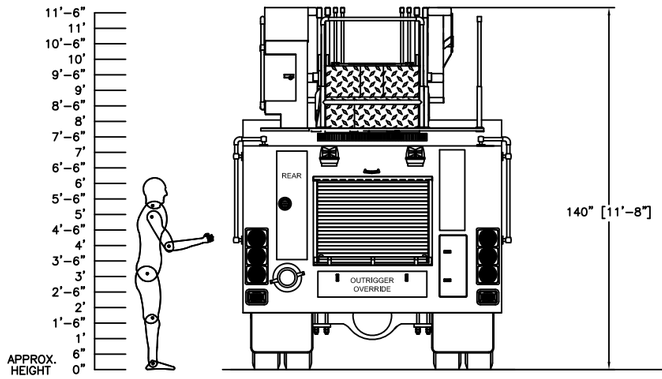

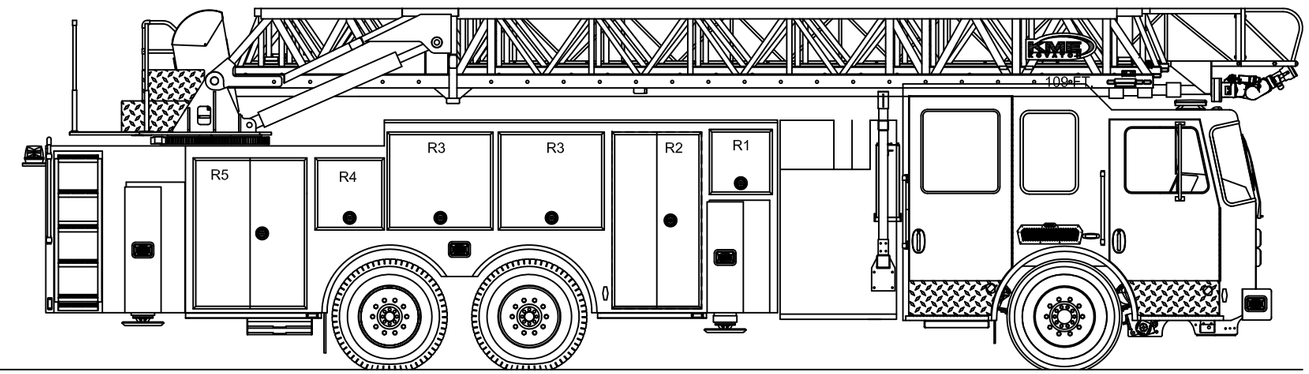

OFFICERS SIDE VIEW

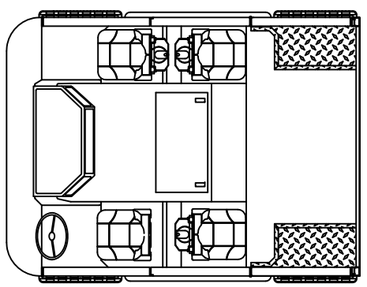

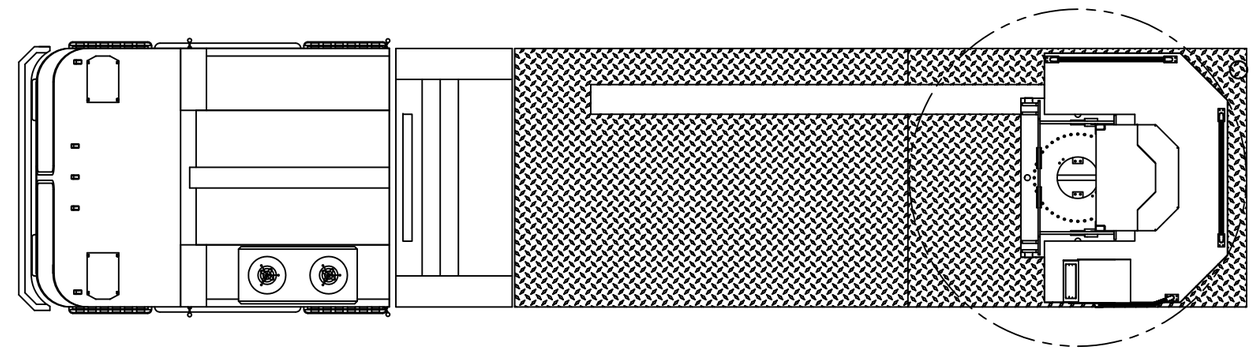

TOP VIEW

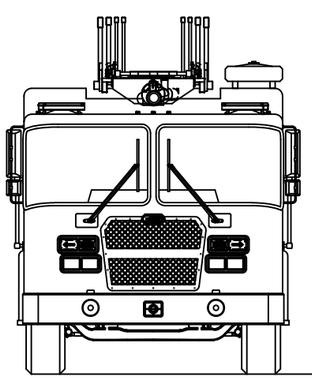

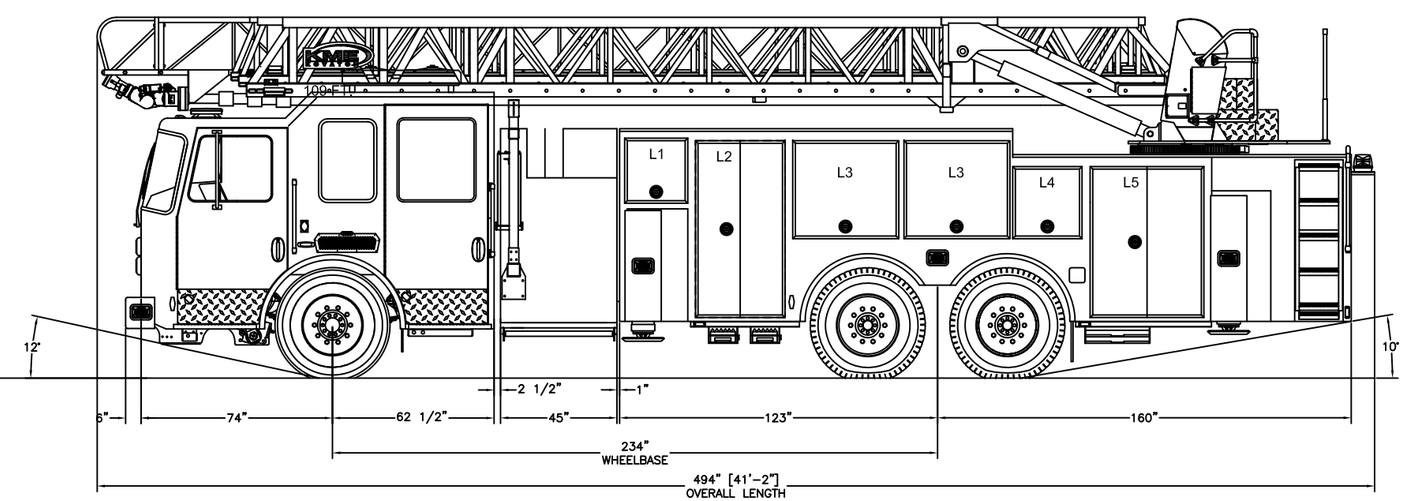

DRIVERS SIDE VIEW

CAB: 100"W PREDATOR MFD 10" RAISED ROOF
ENGINE & TRANS. CUMMINS ISX12 400 HP/ 4000 EVS
AXLES: 23,000# FRONT/54,000# REAR
PUMP: WATEROUS CSU-C20 1250 GPM SINGLE STAGE
WATER TANK: 300 GALLONS

THIS DRAWING IS A GENERAL CONFIGURATION AND MAY NOT NECESSARILY REFLECT ALL CONTRACTUAL REQUIREMENTS. CONTRACT SPECIFICATIONS SHALL PREVAIL OVER DRAWING.

CUSTOMER APPROVAL:

NAME:

TITLE:

DATE:

SYM	DATE	REVISION DESCRIPTION	APP'D

SALES ENGINEER : TBD

DIMENSIONS ARE APPROXIMATE & MAY VARY DUE TO BUILD ADJUSTMENTS

SCALE	DWG SIZE	DRAWN BY	DATE
NONE	B	Z.ZSCHUNKE	9-29-16
		APPROVED BY P.HOHERCHAK	

109' REAR MOUNT LADDER

MAPC 16 BASIC

PROPOSAL DRAWING

KME
ONE INDUSTRIAL COMPLEX - NESQUEHONING, PA 18240

KME

BASE MODEL FCAM 100 FOOT

MIDMOUNT AERIAL LADDER

“QUINT”

MAPC 17

Quote SO

MAPC/FCAM	MAPC 17 BASIC 100' MID MOUNT AERIAL QUINT

Sales Rep:

Terms:

Drawing #:
Est. Delivery Date: / /
Customer PO #:
Customer #:
QPF #:

Penalty:

Quote No: 10095-0007
10/04/2016

PART NO	S	DESCRIPTION	QTY	ID
		== MID MOUNT LADDER - 713.016 07/13/16 ==	**1**	**KMEM**
		== LETTERING & STRIPING, 100' 5-SECTION MM - 713.016 07/13/16 ==	**1**	**KMEM**
		== COMPARTMENT ACCESSORIES MIDMOUNT AERIAL - 713.016 07/13/16 ==	**1**	**KMEM**
		== MISC AND LOOSE EQUIPMENT (AERIAL) - 713.016 07/13/16 ==	**1**	**KMEM**
		== AERIAL WARRANTY PACKAGE W/PUMP - 713.016 07/13/16 ==	**1**	**KMEM**
		DEALER ======= DEALER ======= DEALER	**1**	**DLR**
		QUOTE DATA VERSION: 0713.016 - 2016 DATA SET	**1**	**KMEM**
		INDEX OF PART NUMBERS	**1**	**KMEM**
		****** HEADER - CONTRACTS, PROPOSAL FORM, ETC @ FRONT OF SPECS**	**1**	**KMEM**
		****** PROPOSED - AERIAL SPEC BOILERPLATE**	**1**	**KMEM**
04-00-0000		PROPOSED - GENERAL INFORMATION - NFPA 1901	1	KMEM
04-00-0033		PROPOSED - COMPLETION INFO	1	KMEM
04-00-0040		PROPOSED - FMVSS CERTIFICATION	1	KMEM
04-00-0060		PROPOSED - RECORDS	1	KMEM
04-00-0075		PROPOSED - TOP OF THE LINE CHASSIS MULTIPLEX	1	KMEM
04-00-0107		PROPOSED - GENERAL CONSTRUCTION - AERIAL	1	KMEM
04-00-0120		PROPOSED - SINGLE LINE RESPONSIBILITY	1	KMEM
04-00-0130		PROPOSED - PRODUCT LIABILITY - $30,000,000.00	1	KMEM
04-00-0170		PROPOSED - CRITERIA & CODE CONFORMANCE - AERIAL	1	KMEM
04-00-0193		PROPOSED - PAINT PERFORMANCE CERTIFICATION	1	KMEM
04-00-0490		PROPOSED - PRICES & PAYMENTS	1	KMEM
04-00-0540		PROPOSED - BOND REQUIREMENTS	1	KMEM
04-00-0560		PROPOSED - PERFORMANCE BOND	1	KMEM
04-00-0580		PROPOSED - NON-COLLUSION AGREEMENT	1	KMEM
04-00-0630		PROPOSED - MATERIAL & WORKMANSHIP	1	KMEM
04-00-0660		PROPOSED - CONTRACT SPECIALIST	1	KMEM
04-00-0680		PROPOSED - APPROVAL DRAWING	1	KMEM
04-00-1200		PROPOSED - DELIVERY	1	KMEM
04-00-1215		PROPOSED - INSTRUCTION MANUALS, TWO (2) SETS - CD	1	KMEM
04-00-1215	**X**	POWERPOINT DELIVERY - PROPOSAL FCAM AERIAL	1	
04-00-1300		PROPOSED - VEHICLE FLUIDS PLATE	1	KMEM
04-00-1500		PROPOSED - MANUFACTURE GENERATED EXACT BLUEPRINT WITH BID	1	KMEM

PART NO	S		DESCRIPTION	QTY	ID
04-00-1521	X		PROPOSED - KME and BULLDOG FAMA MEMBERSHIP	1	
04-00-1540			PROPOSED - MANUFACTURED IN THE UNITED STATES	1	KMEM
04-00-1550			PROPOSED - ISO 9001 QUALITY MANAGEMENT SYSTEM	1	KMEM
04-00-1570			PROPOSED - NFPA TREAD PLATE CERTIFICATION	1	KMEM
04-00-2440			PROPOSED - UNDERWRITERS LABORATORIES (UL) TESTING - AERIAL	1	KMEM
04-00-2445	X		PROPOSED - UNDERWRITERS LABORATORIES (UL) TESTING - FCAM	1	
07-00-0015			"AERIAL FIRE APPARATUS" NFPA 2016 CHAPTERS OF COMPLIANCE	1	KMEM
08-00-0000			VEHICLE DATA PLATE DESCRIPTION	1	KMEM
14-00-0000			NFPA ROLLOVER STABILITY GENERAL STATEMENT	1	KMEM
15-00-0010		>	PROPOSED - PRINCIPAL APPARATUS DIMENSIONS & GVWR	1	KMEM
15-00-0050			!!! CRITICAL OVERALL HEIGHT REQUIREMENT !!! - "NO"	1	KMEM
15-00-0150			!!! CRITICAL OVERALL LENGTH REQUIREMENT !!! - "NO"	1	KMEM
AA-00-002A			SERVICE CENTER - PROPOSAL FCAM	1	DLR
BA-00-0305			MM LADDERS	1	KMEM
BA-00-3000			SEAT AND SEAT BELT ANCHOR TESTING	1	KMEM
BA-01-1610			<1> 100'-4-MM-HD WITH PUMP	1	KMEM
BA-01-3950	S	<	<2> TRAVEL HEIGHT 112", 100-4-MM-HD LOW BODY (WITH PUMP)	1	KMEM
			travle height to 112" per spec review #4660		
BA-02-0735			<3> MM-LAD PREDATOR - TANDEM AXLE	1	KMEM
BA-04-0205			AERIAL CHASSIS, MID-MOUNT LADDER -TANDEM AXLE (HEAVY)	1	KMEM
			****** HEADER - 100" PREDATOR CAB ******	**1**	**KMEM**
BA-04-0805			PREDATOR CAB - BASE, 100"	1	KMEM
BA-04-0850			PREDATOR CAB - BASE - ALUMINUM CONSTRUCTION	1	KMEM
BA-04-0990			PREDATOR 100" - CRASH TESTING	1	KMEM
BA-04-0995			PREDATOR 100" - 120,000# ROOF & SIDE TESTING	1	KMEM
BA-04-1300			PREDATOR 100" - MFD CAB LENGTH (DIM - 62 1/2")	1	KMEM
BA-04-1900			PREDATOR 100" - VISTA DIMENSIONS FRONT SEATING & ENGINE ENCLOSURE	1	KMEM
BA-04-4000			10" RAISED ROOF - 100" PREDATOR	1	KMEM
BA-04-5000			CAB ROOF DRIP RAIL 100" PREDATOR/PANTHER	1	KMEM
BA-05-0260			BATTERY ACCESS DOORS - REAR STEP WELLS, EACH SIDE	1	KMEM
BA-05-0610			BARRIER HEIGHT CAB DOORS, 100" PREDATOR "MFD, LFD & X-LFD"	1	KMEM
BA-05-0650			CAST ANTI-SLIP ENTRY STEPS FOR REDUCED LENGTH CAB DOORS	1	KMEM
BA-05-0700			CAB DOORS - BOLT ON WEATHER STRIP	1	KMEM
BA-05-1015			PREDATOR DOOR LATCHES, HD LOOP STYLE LATCH - BARRIER HEIGHT DOORS	1	KMEM
BA-05-1035			LOCKING CAB DOOR , OUT + IN, LOOP STYLE LATCH	1	KMEM
BA-05-1037			KEY MODEL #2001	1	KMEM
BA-05-1103			WINDOWS, MANUAL HAND CRANK STYLE - 100"	1	KMEM
BA-05-1130			DOOR WINDOW TRIM EXTRUSION, 4 - DOOR	1	KMEM
BA-05-1325			FULL HEIGHT INTERIOR DOOR PANELS - BRUSH ALUM, 4 - DOOR	1	KMEM
BA-05-1510			SCOTCHLITE MATERIAL ON INTERIOR OF DOOR PANEL 4-DOORS	1	KMEM
			****** HEADER - CAB EXTERIOR ACCESSORIES & OPT, 100" PREDATOR**	**1**	**KMEM**
BA-05-2410			WINDSHIELD, 100" PREDATOR CAB	1	KMEM
BA-05-2425			WINDSHIELD WIPERS & WASHERS - 100" PREDATOR	1	KMEM
BA-05-2450			SIDE VIEWING WINDOWS NON-SLIDING - PREDATOR	1	KMEM
BA-05-2500			DARK TINT WINDOWS, SIDE VIEWING, REAR DOORS & REAR WALL	1	KMEM
BA-05-2600			GRAB RAILS EXTERIOR, KNURLED ALUMINUM EXTRUSION	1	KMEM
BA-05-2668			PREDATOR INTERIOR GRAB HANDLES - WHEELABRATED	1	KMEM
BA-05-2692			INTERIOR "A" POST GRAB HANDLE "PREDATOR" - WHEELABRATED	1	KMEM
BA-05-2725			FRONT CAB GRILLE - SHAPED PERFORATED POLISHED STAINLESS, 100" PRED, SS, PANTHER	1	KMEM
BA-05-2825			SIDE CAB GRILLES -SHAPED SHAPED PERFORATED POLISHED STAINLESS, 100" PRED, SS, PA	1	KMEM
BA-05-2900			ALUMINUM CAB WHEEL LINERS	1	KMEM
BA-05-2910			ALUMINUM CAB FENDERETTES	1	KMEM
BA-05-3000			FRONT MUD FLAPS	1	KMEM
BA-05-3500			VELVAC MIRRORS " WEST COAST" HEATED / REMOTE - W/CONVEX SPOT	1	KMEM
BA-05-3690			MIRROR CONTROL IN MULTIPLEX CONTROL SCREEN	1	KMEM

PART NO	S	DESCRIPTION	QTY	ID
BA-05-5115		INTERIOR TRIM, 100" PREDATOR	1	KMEM
BA-05-5180		CUSTOM CAB INTERIOR PAINT - TEXTURED GRAY	1	KMEM
BA-05-5200		PREDATOR REAR INTERIOR CAB WALL, GRAY DURAWEAR UPHOLSTERY	1	KMEM
BA-05-5335		TREAD PLATE KICK PLATE ON LOWER INTERIOR REAR WALL	1	KMEM
BA-05-5530	>	STORAGE COMPARTMENTS UNDER FRONT SEATS - 100" PREDATOR	1	KMEM
BA-05-5610		BARYFOL FLOORING	1	KMEM
BA-05-5650		1" ACOUSTICAL INSULATION	1	KMEM
BA-05-5824		ENGINE ENCLOSURE 100" PREDATOR FAB DASH (DURAWEAR)	1	KMEM
BA-05-5860		ENGINE ENCLOSURE MATERIAL - ALUMINUM CAB	1	KMEM
BA-05-7040		SUN VISORS, 100" PREDATOR CAB, PADDED VINYL	1	KMEM
BA-06-0400	>	DELETED - TOP ROLLOVER PROTECTION SYSTEM	1	KMEM
		****** HEADER - CAB SEATING & ACCESSORIES, 100" - PREDATOR MFD**	**1**	**KMEM**
	>	****** SEATING OPTIONS BOSTROM, 100" - PREDATOR - MFD - NON ROLLTEK**	**1**	**KMEM**
BA-06-3215		DRIVERS SEAT, BOSTROM SIERRA FX BUCKET, ABTS 2-WAY MECHANICAL	1	KMEM
BA-06-3630		OFFICERS SEAT, BOSTROM 450 SCBA, ABTS, FIXED	1	KMEM
BA-06-3910		ZICO ULLH SCBA BOTTLE BRACKET - OFFICER'S SEAT	1	KMEM
		MFD CAB - REAR FACING BOSTROM SEATS - NON ROLLTEK	**1**	**KMEM**
BA-06-4110		BOSTROM 450 SCBA ABTS REAR FACING, OUTBOARD, DS	1	KMEM
BA-06-4180		ZICO ULLH SCBA BOTTLE BRACKET - OUTBOARD, DS	1	KMEM
BA-06-4210		BOSTROM 450 SCBA ABTS REAR FACING, OUTBOARD, OS	1	KMEM
BA-06-4280		ZICO ULLH SCBA BOTTLE BRACKET - OUTBOARD, OS	1	KMEM
		MFD CAB - FORWARD FACING BOSTROM SEATS - NON ROLLTEK	**1**	**KMEM**
BA-06-7200		**** DELETE FORWARD FACING SEAT RISER - NOT REQUIRED	1	KMEM
BA-06-8005		BOSTROM SEATING MATERIAL, GRAY TWEED DURAWEAR	1	KMEM
BA-06-8055		NO SCBA PARADE COVERS SUPPLIED	1	KMEM
		****** HEADER - VEHICLE DATA RECORDER SYSTEMS**	**1**	**KMEM**
BA-06-9103	>	CLASS ONE SEAT BELT WARNING SYSTEM - UP TO 6 POSITIONS - ULTRAVIEW DISP	1	KMEM
BA-06-9115		FOUR (4) SEATING POSITIONS	1	KMEM
BA-06-9250	>	HELMET HOLDERS - IN CAB - ZICO	4	KMEM
BA-06-9310		CLASS ONE VEHICLE DATA RECORDER - MULTIPLEX	1	KMEM
		****** HEADER - CAB INTERIOR ACCESSORIES & OPTIONS, 100" PREDATOR**	**1**	**KMEM**
		****** HEADER - INSTRUMENTATION & CONTROLS, 100" PREDATOR - NARROW VISTA**	**1**	**KMEM**
BA-08-0214		DASH & CENTER CONSOLE - 100" PREDATOR FAB DASH (UPHOLSTERED)	1	KMEM
BA-08-0275		INSTRUMENT PANEL, 100" PREDATOR - NARROW	1	KMEM
BA-08-0300		INTER AXLE LOCK CONTROL SWITCH	1	KMEM
BA-08-0315		DIESEL EXHAUST FLUID LEVEL GAUGE	1	KMEM
BA-08-0320		ENGINE COMPRESSION BRAKE CONTROLS	1	KMEM
BA-08-0620		ULTRAVIEW 450 DISPLAY ON CAB DASH FOR ES-KEY SYSTEM	1	KMEM
BA-08-1220		INDICATOR CLUSTER, 100" PREDATOR	1	KMEM
BA-08-1225		"INTER AXLE LOCK" INDICATOR CLUSTER	1	KMEM
BA-08-1235		"ATC DISABLED" INDICATOR CLUSTER	1	KMEM
BA-08-1240		"ATC ACTIVE" INDICATOR CLUSTER	1	KMEM
BA-08-1265		"OUTRIGGERS NOT STOWED" INDICATOR ON DASH	1	KMEM
BA-08-1800		LOWER RIGHT AUXILIARY SWITCH PANEL - PREDATOR - FAB	1	KMEM
BA-08-1900		PUMP SHIFT CONTROL ON LOWER LEFT DASH PANEL	1	KMEM
BA-08-1950		MULTIPLEX CONTROL PUMP SHIFT SWITCH - MULTIPLEX	1	KMEM
BA-08-2000		AERIAL LADDER, LADDER POWER/PTO SWITCHES IN CAB	1	KMEM
BA-08-2750		PREDATOR COMPUTER TERMINAL IN FRONT OF OFFICER (FABRICATED)	1	KMEM
BA-08-2905		OVERHEAD ABS PANEL, FLAT FACED, 100" PREDATOR	1	KMEM
BA-08-3105		HEATER/DEFROSTER & ACCESS, PREDATOR 100" - 10" RAISED ROOF	1	KMEM
BA-08-6900		HVAC CONTROL SYSTEM - INCOPORATED INTO MULTIPLEX CONTROL DISPLAY	1	KMEM
BA-08-9000		CAB TILT SYSTEM & OPTIONS	1	KMEM
BA-08-9110		PARKING BRAKE/CAB TILT INTERLOCK	1	KMEM
		FRAME & AXLE PACKAGE, MID-MOUNT TANDEM AXLE CHASSIS	**1**	**KMEM**
BA-09-5500		110,000 PSI FRAME: MID-MOUNT AERIAL CHASSIS, SPECIAL FRAME	1	KMEM
		HEADER - FRONT BUMPER, EXTENSIONS & ACCESSORIES	**1**	**KMEM**
BA-10-0055	>	BUMPER 12" PAINTED STEEL BUMPER - ALL CABS	1	KMEM

PART NO	S	DESCRIPTION	QTY	ID
BA-10-0100	>	6" FRONT BUMPER EXTENSION WITH TREAD PLATE GRAVEL SHIELD	1	KMEM
BA-10-0405		TREADPLATE GRAVEL SHIELD STANDARD INSTALLATION	1	KMEM
BA-10-2010		TWO (2) PAINTED TOW HOOKS BELOW FRONT BUMPER	1	KMEM
BA-14-0170		23,000# FRONT AXLE MERITOR MFS-20-133A-N	1	KMEM
BA-14-1110		MERITOR, EX-225 17" DISC BRAKES, FRONT AXLE, W/ AUTO SLACK ADJUSTMENT	1	KMEM
BA-14-2040		SUSPENSION FRONT - 23,000# AXLES	1	KMEM
BA-14-2110		FRONT AXLE SHOCK ABSORBERS - MONROE "MAGNUM - 70"	1	KMEM
BA-15-1060		58,000# TANDEM REAR AXLE MERITOR RT-58-185	1	KMEM
BA-15-1510		16.5" X 7" S-CAM BRAKES - MERITOR REAR TANDEM W/AUTO SLACK ADJ.	1	KMEM
BA-15-2810		VEHICLE TOP SPEED - 2016 NFPA STATEMENT	1	KMEM
BA-15-4640	>	RIDEWELL "DYNALASTIC" 202S RUBBER BLOCK SUSPENSION, TANDEM AXLE 58,000#	1	KMEM
		****** HEADER - BRAKE SYSTEM, TANDEM AXLE VEHICLE**	**1**	**KMEM**
BA-20-1005		BRAKE SYSTEM, TA CHASSIS	1	KMEM
BA-20-1110		ABS BRAKING FOR TANDEM REAR AXLE CHASSIS	1	KMEM
BA-20-1275	>	ELECTRONIC STABILITY CONTROL (ESC) WITH (ATC) - CUSTOM TA	1	KMEM
BA-20-1530		AIR RESERVOIRS 7100 CU IN TA, BASE	1	KMEM
BA-20-2025		1/4 TURN DRAIN VALVES ON ALL AIR TANKS	1	KMEM
BA-20-3010		ROCKWELL/WABCO SYSTEM SAVER #1200, AIR DRYER HEATED	1	KMEM
BA-20-5005		COLOR CODED SYNFLEX BRAKE LINES W/QUICK RELEASE FITTINGS - TA	1	KMEM
BA-20-5500		AIR COMPRESSOR -WABCO 18.7 CFM- STD. FOR ALL CUMMINS ENGINES	1	KMEM
BA-20-5810		BRAKE TREADLE VALVE	1	KMEM
BA-20-6010		PARKING BRAKE CONTROL - NEAR DRIVER - ALL WHEEL LOCK	1	KMEM
		HEADER, TIRE AND WHEEL OPTIONS	**1**	**KMEM**
		HEADER, WHEELS, 23,000 FRONT AXLE - ALUMINUM	**1**	**KMEM**
BA-25-1010		FRONT WHEELS, MILL ALUMINUM DISC TYPE - PAINTED 22.5 X 13, 24,390#	1	KMEM
BA-25-1020		FRONT WHEELS, LUG AND HUB TRIM (MILL ALUM WHEELS)	1	KMEM
BA-25-2030	>	FRONT, GOODYEAR 425/65R22.5 L 24,400# G296 MSA MIXED - 68MPH	1	KMEM
BA-25-2400		GOODYEAR - FIRE SERVICE RATING - TIRE RESTRICTIONS	1	KMEM
		HEADER, TIRES & WHEELS, 58,000 TANDEM REAR AXLE	**1**	**KMEM**
BA-25-5015	>	REAR WHEELS, STEEL DISC TYPE, 22.5 X 9, TA	1	KMEM
BA-25-5052		REAR WHEELS, NO LUG AND HUB TRIM PROVIDED (STEEL)	1	KMEM
BA-25-7055	>	REAR, GDYR 315/80R22.5 J 64,000# RHD II+ TRACTION - 75MPH, TA	1	KMEM
BA-25-7400		GOODYEAR - FIRE SERVICE RATING - TIRE RESTRICTIONS	1	KMEM
BA-25-9905		TIRE PRESSURE MONITORING - LED VALVE STEM CAPS - TEN TIRES	1	KMEM
		100" PREDATOR - ENGINE PACKAGE, MID-MOUNT TANDEM AXLE CHASSIS	**1**	**KMEM**
		****** 100" - HEADER, ENGINE & ENGINE COMPONENTS**	**1**	**KMEM**
BA-30-3185	>	CUMMINS ISX12 - 400 HP @ 1800 RPM TQ 1550 lb-ft @ 1100 - PREDATOR NARROW	1	KMEM
BA-30-9810		PROPOSED - ENGINE CERTIFICATION CUSTOM CHASSIS	1	KMEM
BA-32-0035		COOLING/RADIATOR, 100" PREDATOR - NARROW	1	KMEM
BA-32-0070		ENGINE COOLANT FILTER - CUMMINS ISC - ISX	1	KMEM
BA-32-0085		COOLING SYSTEM CRITERIA	1	KMEM
BA-32-0100		TRANSMISSION COOLER	1	KMEM
BA-32-0120		RADIATOR SKID PLATE	1	KMEM
BA-32-0160		CHARGED AIR COOLER (FRONT MOUNT)	1	KMEM
BA-32-0245		COOLANT FAN, W/CLUTCH - CUMMINS ISX12	1	KMEM
BA-32-0340		HEATER AND COOLANT HOSES/PIPING	1	KMEM
BA-32-0420		LOW COOLANT INDICATOR LIGHT AND ALARM IN CAB	1	KMEM
BA-33-0020	>	SECONDARY BRAKING - ENGINE COMPRESSION BRAKE	1	KMEM
BA-33-0150		FAST IDLE CONTROL FOR ALL ELECTRONIC ENGINES - SMART WHEEL	1	KMEM
BA-33-0160		ENGINE AIR CLEANER	1	KMEM
BA-33-0180		SPARK ARRESTOR	1	KMEM
BA-33-0200		ACCELERATOR PEDAL - FLOOR MOUNT	1	KMEM
BA-33-0250		REMOTE THROTTLE & INTERLOCK HARNESS	1	KMEM
BA-40-0300		ALLISON 4000EVS TRANS. - COMPRESSION BRAKE	1	KMEM
BA-40-0660		FIVE (5) SPEED AUTOMATIC TRANSMISSION - 4000 SERIES	1	KMEM
BA-40-0700		ALLISON TRANSMISSIONS, ELECTRONIC TOUCH PAD SHIFTER IN CAB	1	KMEM
BA-40-0855		TRANSMISSION OIL LEVEL SENSOR	1	KMEM

PART NO	S	DESCRIPTION	QTY	ID
BA-40-0860		ALLISON PARK TO NEUTRAL	1	KMEM
BA-40-0910		ALLISON PRESELECT PROGRAMMING	1	KMEM
BA-40-0920		PRESELECT PROGRAMMED FOR 4TH GEAR	1	KMEM
BA-40-4720		TES-389 TRANS FLUID 4000EVS TRANSMISSION	1	KMEM
BA-45-0110		DRIVE LINES DANA-SPICER #1810 SERIES	1	KMEM
BA-49-0100		DIESEL EXHAUST FLUID TANK - 5 GALLON	1	KMEM
BA-50-0110		EXHAUST SYSTEM - DPF & SCR SYSTEM - INLINE SYSTEM	1	KMEM
BA-50-0155		ALUMINIZED STEEL EXHAUST TAILPIPE/OUTLET OS - DPF + SCR SYSTEM	1	KMEM
BA-50-2500		FUEL SYSTEM	1	KMEM
BA-50-2515	>	FUEL TANK - 65 GALLON, STEEL - ALL MID-MOUNTS	1	KMEM
BA-50-2625		FUEL LINES - FIBER REINFORCED HOSE	1	KMEM
BA-50-2645	>	CUMMINS FUEL-WATER SEPARATOR	1	KMEM
BA-50-2670		FUEL PUMP SECONDARY ELECTRIC, REQ. ON 210" W-B OR LONGER	1	KMEM
BA-50-2700		FUEL POCKET, LEFT SIDE REAR WHEEL WELL PANEL	1	KMEM
BA-50-5050	>	STEERING - DUAL SHEPPARD POWER STEERING GEARS	1	KMEM
BA-50-7115		STEERING COLUMN - CLOCK SPRING "NARROW"	1	KMEM
BA-50-7155		18" STEERING WHEEL - 4 SPOKE - "NARROW"	1	KMEM
BA-50-9000		ROAD SAFETY KITS	1	KMEM
		****** HEADER, MM LADDER CHASSIS ELECTRICAL, 100" PREDATOR (OPTIONS)**	**1**	**KMEM**
		****** HEADER, MM LADDER W/ PUMP BODY ELECTRICAL (OPTIONS)**	**1**	**KMEM**
BE-01-0005		PREDATOR CHASSIS ELECTRICAL SYSTEM DESCRIPTION	1	KMEM
BE-01-0105		PREDATOR CHASSIS WIRING INSTALLATION	1	KMEM
BE-01-0150		DIRECT BATTERY GROUNDING STRAP - PREDATOR	1	KMEM
BE-01-0153		EMI/RFI PROTECTION	1	KMEM
BE-01-0205		PREDATOR 12 VOLT ELECTRICAL SYSTEM TESTING	1	KMEM
BE-05-0353		CLASS-1 ES-KEY MULTI-PLEXED ELECTRICAL SYSTEM 100" PREDATOR	1	KMEM
BE-05-0450		CLASS-1 ES-KEY ULTRAVIEW 450 DISPLAY	1	KMEM
BE-05-0800		INTER-LOCK MODULE FOR MULTIPLEX SYSTEM	1	KMEM
BE-05-0900		CHASSIS DIAGNOSTICS SYSTEM	1	KMEM
BE-05-1160		VOLTAGE MONITORING SYSTEM - 12 VOLT	1	KMEM
BE-05-1165		INDICATOR LIGHT AND ALARM PROVE-OUT SYSTEM	1	KMEM
BE-05-1170		SEQUENCER	1	KMEM
BE-05-1175		ELECTRICAL HARNESS INSTALLATION - 12 VOLT	1	KMEM
BE-10-0407		LEECE NEVILLE - 270 AMP 4949PA - ALTERNATOR	1	KMEM
BE-15-0680		BATTERIES - FIVE (5) EXIDE GROUP 31, 925CCA	1	KMEM
BE-15-1105		PREDATOR BATTERY STORAGE, STEEL, MFD, XMFD, LFD, XLFD	1	KMEM
BE-15-1500		BATTERY DISCONNECT SWITCH, ALL UNITS	1	KMEM
BE-15-1555		COLE HERSEE BATTERY JUMPER STUDS, DS BATTERY BOX	1	KMEM
BE-20-1600		12 VOLT POLARIZED CHARGE RECEPTACLE	1	KMEM
BE-20-1715		SHORELINE RECEPTACLE LABEL - NFPA	1	KMEM
BE-20-1750		SHORELINE LOCATION - ADJACENT TO DRIVER'S DOOR	1	KMEM
BE-30-0100		CONTROL SWITCHING - EATON MULTIPLEX SWITCHES - 12 ABOVE DRIVER	1	KMEM
BE-30-0120		CONTROL SWITCHING - EATON MULTIPLEX SWITCHES - 9 LOWER PANEL	1	KMEM
BE-30-2500		CONTROL SWITCHING LABELING	1	KMEM
BF-00-0505		WELDON #8080-0000-13 WHITE/RED HALOGEN INTERIOR LIGHTS (4)	1	KMEM
BF-00-5000		DOOR OPEN INDICATOR W/ INTEGRAL AUDIBLE ALARM	1	KMEM
		****** HEADER, 12V POWER/ USB CHARGING/ POWER - GROUND CIRCUITS, CUSTOM ******	**1**	**KMEM**
BF-01-6000		12 VOLT POWER AND GROUND CIRCUIT FOR ACCESSORIES IN DASH	1	KMEM
		****** HEADER, REAR/SIDE VISION CAMERA SYSTEMS ******	**1**	**KMEM**
BF-20-0000		DUAL HEADLIGHTS, HALOGEN, PREDATOR - DUAL BEZELS	1	KMEM
BF-20-0320		DAYTIME RUNNING LIGHTS, ALL CABS	1	KMEM
BG-00-0055		DUAL MODULE w/ CODE 3 65STA LED TURN SIGNAL & REQ WARN LIGHT	1	KMEM
BG-00-0420		CUST MM LADDER CHASSIS LED MARKER LIGHTS	1	KMEM
BG-00-0520		CUST MM LADDER BODY LED MARKER LIGHTS	1	KMEM
BG-00-1200		WHELEN LED MARKER LIGHTS @ TOP FRONT ROOF EDGE OF CAB	1	KMEM
BG-00-1600		TRUCK-LITE MARKER LIGHTS @ EA SIDE OF CAB, ADJACENT TO DRIVER DOOR	1	KMEM
BG-00-1610		TRUCK-LITE MARKER/TURN LIGHTS @ EA SIDE OF BODY	1	KMEM

PART NO	S	DESCRIPTION	QTY	ID
BG-00-1660		TRUCK-LITE MARKER LIGHTS @ REAR OF BODY	1	KMEM
BG-00-1800		TRUCK-LITE DOT AMBER REFLECTORS @ SIDE OF BODY	1	KMEM
BG-00-1810		TRUCK-LITE DOT RED REFLECTORS @ REAR OF BODY	1	KMEM
BG-00-2915		TECNIQ #L10 LED LICENSE PLATE LIGHT @ DS REAR OF BODY	1	KMEM
BG-02-1500		WELDON #2010 HAL. BRAKE, REVERSE, & TURN	1	KMEM
BH-04-1050		CAB STEP LIGHTS, TECNIQ EON 3 LED, ALL DEVICES	4	KMEM
BH-04-1130		BODY STEP LIGHTS, TECNIQ EON 3 LED, ALL DEVICES	4	KMEM
BH-05-2310		AERIAL ACCESS LADDER ILLUMINATION - WHELEN 3" LED - MM BODY	1	KMEM
	>	****** HEADER, HOSE BED LIGHTING ******	**1**	**KMEM**
BH-06-0100		UNITY HOSE BED LIGHTS, ALL DEVICES	1	KMEM
BH-06-2200		HOSE BED WORK LIGHT - SWITCH	1	KMEM
		****** HEADER, SCENE LIGHTS - MM / TDA**	**1**	**KMEM**
		****** HEADER, SCENE LIGHTS - MM PLATFORM W/ PUMP**	**1**	**KMEM**
BH-11-0500		NFPA (4) JW SPEAKER LED RECTANGLE GROUND LIGHTS, BELOW CAB DOORS	1	KMEM
BH-11-0560		GROUND LIGHTS, 2 LED BELOW PUMP PANEL RUNNING BOARD - RH	1	KMEM
BH-11-0585		GROUND LIGHTS, 2 LED, AT REAR BODY CORNERS - RH	1	KMEM
		****** HEADER, BROW AND CAB RADIUS LIGHTS - CUSTOM CHASSIS**	**1**	**KMEM**
		****** HEADER, TELESCOPING LIGHTS, REAR OF CAB - CUSTOM CHASSIS**	**1**	**KMEM**
BI-00-0200		AERIAL BODY ELECTRICAL SYSTEM	1	KMEM
BI-00-0205		AERIAL BODY ELECTRICAL JUNCTION COMPARTMENT	1	KMEM
BI-00-0215		MID-MOUNT, AERIAL DEVICE ELECTRICAL JUNCTION COMPARTMENT	1	KMEM
BI-00-0525		BODY ELECTRICAL HARNESS - ES-KEY	1	KMEM
BJ-00-5115		PUMP ENCLOSURE WORK LIGHTS - TECNIQ LED	1	KMEM
BJ-00-5165		ENGINE COMPARTMENT WORK LIGHTS - TECNIQ LED	1	KMEM
		COMPARTMENT LIGHTS - MID MOUNT TANDEM AXLE	**1**	**KMEM**
BJ-02-1055	>	COMPT. LIGHTS, TECNIQ E18 LED	11	KMEM
		****** CUSTOM MID MOUNT AERIAL NFPA WARNING LIGHT PACKAGE**	**1**	**KMEM**
BL-95-0000		NFPA COMPLIANT WARNING LIGHT PACKAGE - ALL UNITS	1	KMEM
BL-95-0100		LIGHT PACKAGE ACTUATION/CONTROLS - ALL UNITS	1	KMEM
BL-98-0000		WARNING LIGHT FLASH PATTERN - NFPA FLASH PATTERN	1	KMEM
BM-00-0204		CODE 3 UPPER PACKAGE - CUSTOM MID MOUNT AERIAL	1	KMEM
BM-02-0086	>	A-UPPER, CODE 3 LED 2780NFPA P1, RX 2700 80" PRIZM II BAR	1	KMEM
BM-02-1000		C-UPPER, CODE 3 HALOGEN 550 BEACONS, RED DRIVER, AMBER OFFICER	1	KMEM
BM-02-2000		B/D-UPPER REAR, COVERED BY LIGHTS IN ZONE C-UPPER	1	KMEM
BM-02-3000		B/D-UPPER FRONT, COVERED BY LIGHTS IN ZONE A-UPPER	1	KMEM
BM-07-0204		CODE 3 LOWER PACKAGE - CUSTOM MID MOUNT AERIAL	1	KMEM
BM-09-0018	>	A-LOWER FRONT, CODE 3 65 SERIES LED	1	KMEM
BM-09-0098		A-LOWER FRONT MOUNTING, CUSTOM CHASSIS	1	KMEM
BM-09-1014	>	C-LOWER REAR, CODE 3 65 SERIES LED	1	KMEM
BM-09-2006	>	B/D-LOWER FRONT, CODE 3 65 SERIES LED	1	KMEM
BM-09-2098		B/D-LOWER FRONT MOUNTING, CUSTOM CHASSIS	1	KMEM
BM-09-3006	>	B/D-LOWER MID, CODE 3 65 SERIES LED	1	KMEM
BM-09-3506	>	B/D-LOWER SECONDARY MID, CODE 3 65 SERIES LED	1	KMEM
BM-09-4006	>	B/D-LOWER REAR, CODE 3 65 SERIES LED	1	KMEM
BM-15-0000		LIGHT PACKAGE NFPA CERTIFICATION - ALL UNITS	1	KMEM
		****** HEADER, OPTIONAL WARNING LIGHTS**	**1**	**KMEM**
		****** HEADER, AUDIBLE WARNING & COMMUNICATION EQUIPMENT**	**1**	**KMEM**
BW-00-0510		CHASSIS SINGLE ELECTRIC (DOT) HORN	1	KMEM
BW-00-0560		CODE 3, #CA278, BACK-UP ALARM - 87DBA	1	KMEM
BW-00-5295		DELETE STANDARD DUAL AIRHORNS	1	KMEM
BW-01-0120		SIREN, WHELEN # 295HFS2, 100W - FLUSH MOUNT	1	KMEM
BW-01-1020		ONE (1) WHELEN SA315P SPEAKER	1	KMEM
		****** HEADER, PUMP, TANK & ACC, 100' HD 4-SECT, MM**	**1**	**KMEM**
DC-00-2355		WATEROUS S100, 1500 GPM SINGLE STAGE PUMP - MID MOUNT	1	KMEM
DC-01-4630		WATEROUS S100 MECHANICAL PUMP SEAL	1	KMEM
DC-01-6211		WATEROUS "C20" DRIVE UNIT, WATEROUS MID-MOUNT (FRONT DRIVE)	1	KMEM
DC-01-6490		PUMP RATIO (HALE, WATEROUS OR DARLEY)	1	KMEM
DC-01-7140		WATEROUS AIR SHIFT	1	KMEM
DC-01-8590		PUMP SHIFT MANUAL OVERRIDE (HALE, WATEROUS OR DARLEY)	1	KMEM

PART NO	S	DESCRIPTION	QTY	ID
DC-01-8615		WATEROUS PUMP SHIFT INDICATOR LIGHTS	1	KMEM
DC-01-9020		TRANSMISSION LOCK-UP (HALE, WATEROUS OR DARLEY)	1	KMEM
DC-02-1900		PUMP MOUNTS - MID-SHIP PUMPS	1	KMEM
DC-02-1990		PUMP INSTALLATION - CUSTOM	1	KMEM
DC-04-0120		MANIFOLD - DISCHARGE & SUCTION FOR 1250-2000 GPM INTERFACE PUMPING SYSTEM	1	KMEM
		****** HEADER, WATEROUS S100, PRESSURE CONTROL - MID MOUNT**	**1**	**KMEM**
DC-05-1210	>	CLASS ONE "CAPTAIN" GOVERNOR CONTROL	1	KMEM
DC-05-1295		TASK FORCE TIPS #A18 SERIES INTAKE RELIEF VALVE	1	KMEM
DC-05-2500		PUMP UL CERTIFICATION - 750 GPM & UP	1	KMEM
		WATEROUS, PUMP PRIMING PUMP AND CONTROLS	**1**	**KMEM**
DC-05-3680	>	TRIDENT "MANUAL" AIR PRIMING SYSTEM	1	KMEM
		WATEROUS, DRAINS & ACCESSORES	**1**	**KMEM**
DC-05-5110		ROTARY MASTER DRAIN VALVE	1	KMEM
DC-05-5400		DRAINS/BLEEDER "INNOVATIVE CONTROLS" LIFT UP @ ALL 1-1/2" OR LARGER	1	KMEM
DC-05-5500		SYNFLEX SUCTION, DISCHARGE, PRESSURE AND CONTROL LINES	1	KMEM
DC-05-6220		WATEROUS ANODE BLOCKS - 2 TOTAL	1	KMEM
DC-10-2020		SIDE MOUNT PUMP MODULE, MM AERIAL	1	KMEM
DC-10-2500		PUMP MODULE - STEEL CONSTRUCTION	1	KMEM
		****** HEADER, SUCTIONS - MIDMOUNT, SIDE MOUNT**	**1**	**KMEM**
DC-14-3330		WATEROUS MAIN SUCTION INLETS 6" NST, 1500 GPM S100 PUMP	1	KMEM
DC-14-5300		SHORT NECK MAIN PUMP SUCTION INLETS - DS & OS	1	KMEM
DC-14-5560	>	6" NST MAIN PUMP SUCTION PRESSURE VENTED CAPS (2)	1	KMEM
		HEADER - AUXILIARY SUCTION/S - AERIALS	**1**	**KMEM**
DC-20-1000		2 1/2" AUX. SIDE SUCTION @ DS PANEL TO REAR OF MAIN INLET	1	KMEM
DC-20-1100		2 1/2" AKRON #8800 S.S. BALL VALVE, DS REAR AUX SUCTION	1	KMEM
DC-20-1200		SWING CONTROL @ VALVE, DS REAR AUX SUCTION	1	KMEM
DC-20-9500		BEHIND PANEL MOUNT	1	KMEM
		****** HEADER - TANK TO PUMP - MID-MOUNTS**	**1**	**KMEM**
DC-25-1200		TANK TO PUMP - 3" VALVE - LADDERS & PLATFORMS	1	KMEM
DC-25-3110		3" AKRON #8800 SERIES - S.S. BALL, VALVE , TANK TO PUMP	1	KMEM
DC-25-5110		3" PUSH/PULL CONTROL FOR TANK TO PUMP	1	KMEM
		****** HEADER - TANK FILL - MID-MOUNTS**	**1**	**KMEM**
DC-30-2100		TANK FILL LINE 2" FROM PUMP - SIDE MOUNT	1	KMEM
DC-30-2300		2" AKRON #8800 SERIES - S.S. BALL TANK FILL, SIDE MOUN	1	KMEM
DC-30-6500		PUSH/PULL CONTROL FOR TANK FILL	1	KMEM
		****** DISCHARGES & ACCESSORIES, MID MOUNT AERIAL - SIDE MOUNT**	**1**	**KMEM**
		DRIVER'S SIDE #1 MAIN DISCHARGE	**1**	**KMEM**
DC-35-0010		DS MAIN DISCHARGE #1 - SIDE MOUNT	1	KMEM
DC-35-0110		2 1/2" AKRON #8800 SERIES - S.S. BALL, DS #1, SIDE MOUNT	1	KMEM
DC-35-1815		DS #1 DISCH - 2 1/2" STRAIGHT NST & 30-DEGREE NST ELBOW	1	KMEM
DC-35-2010		2 1/2" NST PRESSURE VENTED CAP - DS DISCHARGE #1	1	KMEM
DC-35-2410		PUSH/PULL CONTROL FOR DS DISCHARGE #1 -SIDE MOUNT	1	KMEM
DC-35-3110		INNOVATIVE CONTROLS LIQUID FILLED 2 1/2" PRESS GAUGE SS- DS DISCHARGE #1	1	KMEM
		DRIVER'S SIDE #2 MAIN DISCHARGE	**1**	**KMEM**
DC-35-5010		DS MAIN DISCHARGE #2 - SIDE MOUNT	1	KMEM
DC-35-5110		2 1/2" AKRON #8800 SERIES - S.S. BALL, DS #2, SIDE MOUNT	1	KMEM
DC-35-6815		DS #2 DISCH - 2 1/2" STRAIGHT NST & 30-DEGREE NST ELBOW	1	KMEM
DC-35-7010		2 1/2" NST PRESSURE VENTED CAP - DS DISCHARGE #2	1	KMEM
DC-35-7410		PUSH/PULL CONTROL FOR DS DISCHARGE #2 -SIDE MOUNT	1	KMEM
DC-35-8110		INNOVATIVE CONTROLS LIQUID FILLED 2 1/2" PRESS GAUGE SS- DS DISCHARGE #2	1	KMEM
		OFFICER'S SIDE #1 MAIN DISCHARGE	**1**	**KMEM**
DC-39-0010	>	OS MAIN DISCHARGE #1 - SIDE MOUNT	1	KMEM
DC-39-0110		2 1/2" AKRON #8800 SERIES - S.S. BALL, OS #1, SIDE MOUNT	1	KMEM
DC-39-1815		OS #1 DISCH - 2 1/2" STRAIGHT NST & 30-DEGREE NST ELBOW	1	KMEM
DC-39-2010		2 1/2" NST PRESSURE VENTED CAP - OS DISCHARGE #1	1	KMEM
DC-39-2410		PUSH/PULL CONTROL FOR OS DISCHARGE #1 -SIDE MOUNT	1	KMEM

PART NO	S	DESCRIPTION	QTY	ID
DC-39-3110		INNOVATIVE CONTROLS LIQUID FILLED 2 1/2" PRESS GAUGE SS- OS DISCHARGE #1	1	KMEM
		OFFICER'S SIDE #2 MAIN DISCHARGE	**1**	**KMEM**
DC-39-5010	>	OS MAIN DISCHARGE #2 - SIDE MOUNT	1	KMEM
DC-39-5110		2 1/2" AKRON #8800 SERIES - S.S. BALL, OS #2, SIDE MOUNT	1	KMEM
DC-39-6815		OS #2 DISCH - 2 1/2" STRAIGHT NST & 30-DEGREE NST ELBOW	1	KMEM
DC-39-7010		2 1/2" NST PRESSURE VENTED CAP - OS DISCHARGE #2	1	KMEM
DC-39-7410		PUSH/PULL CONTROL FOR OS DISCHARGE #2 -SIDE MOUNT	1	KMEM
DC-39-8110		INNOVATIVE CONTROLS LIQUID FILLED 2 1/2" PRESS GAUGE SS- OS DISCHARGE #2	1	KMEM
		CROSSLAY #1 DISCHARGE	**1**	**KMEM**
DC-47-0400		CROSSLAY #1, 1 1/2" - AERIAL	1	KMEM
DC-47-1110		CROSSLAY #1 CAPACITY - 200' OF 1 3/4" HOSE	1	KMEM
DC-47-1410		CROSSLAY #1 - DOUBLE STACK HOSE DESIGN	1	KMEM
DC-47-1510		1 1/2" NST CHICKSAN SWIVEL - CROSSLAY #1	1	KMEM
DC-47-2110		CROSSLAY #1, PLUMBING, 2" STAINLESS STEEL PIPING	1	KMEM
DC-47-2210		2" AKRON #8800 SERIES - S.S. BALL, VALVE CROSSLAY #1, DISCH	1	KMEM
DC-47-2610		PUSH/PULL 1/4 TURN CONTROL CROSSLAY #1	1	KMEM
DC-47-3210		INNOVATIVE CONTROLS LIQUID FILLED 2 1/2" PRESS GAUGE SS - CROSSLAY #1	1	KMEM
		CROSSLAY #2 DISCHARGE	**1**	**KMEM**
DC-47-5400		CROSSLAY #2, 1 1/2" - AERIAL	1	KMEM
DC-47-6110		CROSSLAY #2 CAPACITY - 200' OF 1 3/4" HOSE	1	KMEM
DC-47-6410		CROSSLAY #2 - DOUBLE STACK HOSE DESIGN	1	KMEM
DC-47-6510		1 1/2" NST CHICKSAN SWIVEL - CROSSLAY #2	1	KMEM
DC-47-7110		CROSSLAY #2, PLUMBING, 2" STAINLESS STEEL PIPING	1	KMEM
DC-47-7210		2" AKRON #8800 SERIES - S.S. BALL, VALVE CROSSLAY #2,	1	KMEM
DC-47-7610		PUSH/PULL 1/4 TURN CONTROL CROSSLAY #2	1	KMEM
DC-47-8210		INNOVATIVE CONTROLS LIQUID FILLED 2 1/2" PRESS GAUGE SS - CROSSLAY #2	1	KMEM
		CROSSLAY OPTIONS - MM AERIAL	**1**	**KMEM**
DC-50-7015	>	VINYL CROSS LAY COVER	1	KMEM
DC-50-7030		CROSSLAY COVER RED IN COLOR	1	KMEM
	>	**WATERWAY DISCHARGE**	**1**	**KMEM**
DC-62-0225		AERIAL WATERWAY DISCHARGE - MM AERIAL	1	KMEM
DC-62-1150		WATERWAY DISCHARGE, PLUMBING, 5" STAINLESS STEEL - MM	1	KMEM
DC-62-1240		4" AKRON #8840 SERIES VALVE, WATERWAY	1	KMEM
DC-62-1950	>	AKRON HANDWHEEL GEAR VALVE CONTROL, WATERWAY	1	KMEM
DC-62-2210		INNOVATIVE CONTROLS LIQUID FILLED 2 1/2" PRESS GAUGE SS - WATERWAY	1	KMEM
		PUMP PANELS & ACCESSORIES	**1**	**KMEM**
DD-65-0510		SIDE MOUNT PUMP PANEL - MID-MOUNT	1	KMEM
DD-65-4115		SIDE MOUNT PANELS - 12 GAUGE BRUSHED STAINLESS STEEL	1	KMEM
DD-65-4715		HORIZONTALLY HINGED GAUGE PANEL - MID-MOUNT	1	KMEM
DD-65-4810		OFFICER SIDE VERTICALLY HINGED PUMP ACCESS DOOR - SIDE MOUNT	1	KMEM
DD-65-4820		PUMP ACCESS DOORS - MID-MOUNT	1	KMEM
DD-65-5150		PANEL FASTENERS	1	KMEM
DD-65-5510		CAPS AND ADAPTERS SAFETY TETHER - BALL CHAIN	1	KMEM
DD-65-8820		PUMP PANEL DISCH./SUCTION TRIM PLATES, HIGH POLISHED	1	KMEM
DD-65-9000		DISCHARGE GAUGE TRIM BEZELS	1	KMEM
DD-65-9110		IDENTIFICATION PLATES	1	KMEM
DD-66-0300		PUMP OPERATOR'S PANEL LIGHT SHIELD - MID-MOUNT	1	KMEM
DD-66-0340		TECNIQ E18 LED LIGHTS - MID-MOUNT	1	KMEM
DD-66-2100		OS PUMP PANEL LIGHTING	1	KMEM
DD-66-2130		TECNIQ EON 3 LED LIGHTS - OS PUMP PANEL	1	KMEM
		PUMP OPERATOR'S PANEL - SIDE MOUNT, AERIAL - MID MOUNT	**1**	**KMEM**
DD-70-2330		CLASS ONE "CAPTAIN" PRESSURE GOVERNOR CONTROL @ PANEL	1	KMEM
DD-70-2410		PUMP PRESSURE & VACUUM TEST PORTS @ PANEL	1	KMEM
DD-70-4120		MASTER PRESSURE & COMPOUND GAUGES - 4" NOMINAL GAUGES	1	KMEM
DD-70-4220		4" INNOVATIVE CONTROLS MASTER PRESSURE AND COMPOUND GAUGES	1	KMEM

PART NO	S	DESCRIPTION	QTY	ID
DD-70-4680		PRESSURE & COMPOUND GAUGE RANGES - SINGLE STAGE	1	KMEM
DD-70-4825		CLASS ONE "ENFO IV" FOR SAE J1939 ENGINES	1	KMEM
DD-70-4900		AUXILIARY ENGINE COOLER	1	KMEM
		WATER TANK LEVEL GAUGE - AERIAL, MID-MOUNT	**1**	**KMEM**
DD-72-0210		IC, SL ULTRA-BRIGHT 10 LIGHT LED WATER TANK GAUGE - PUMP	1	KMEM
DD-72-1100	>	IC WATER LEVEL - 1/4" NPT PRESS TRANSDUCER @ BOTTOM OF TANK	1	KMEM
DD-80-0110		SLIDE-OUT STEP @ DRIVER'S PUMP OPERATOR'S PANEL	1	KMEM
DE-00-1060	>	**** HEADER, MM LADDERS, WATER TANK	1	KMEM
		WATER TANKS/OPTIONS AERIALS	**1**	**KMEM**
DE-05-1700	>	UPF POLYIIE TANK, 300 GAL. - AERIAL	1	KMEM
DE-05-6000		TANK DESCRIPT, CONSTR AND MOUNT, UPF POLY IIE TANK	1	KMEM
JA-00-0100		BODY AND COMPARTMENT HEADER (ALL AERIAL DEVICES)	1	KMEM
JA-00-5040		GENERAL BODY DESCRIPTION, MID-MOUNT, 100' LADDERS	1	KMEM
TF-08-0800	>	ANY MID-MOUNT, TURNTABLE COMPTS, LH & RH SIDE, LOW BODY	1	KMEM
TF-08-2000	>	COMPARTMENTATION, 100-4-HD-MM STYLE #1H-LO	1	KMEM
		**** HEADER, MM BODY OPTIONS (WITH PUMP)**	**1**	**KMEM**
TF-10-0100		BEVELED OVERLAPPING DOORS, ALL COMPARTMENTS, ALL DEVICES	1	KMEM
TF-10-1900		BRUSHED FINISHED DOOR PANS - 2" THICK DOORS	1	KMEM
TF-10-2700		DOOR HINGE FOR BEVELED OVERLAPPING HINGED DOORS	1	KMEM
TF-10-2800		DOOR SEAL FOR BEVELED OVERLAPPING HINGED DOORS	1	KMEM
TF-10-2940		ROTARY LATCHES WITH D-RING HANDLES	1	KMEM
TF-10-3150		GAS SHOCK ON HORIZONTALLY & VERTICALLY HINGED DOORS	1	KMEM
TF-10-6000		COMPARTMENT FLOORS (AERIALS ONLY)	1	KMEM
TF-11-0500		COMPARTMENT GENERAL DESCRIPTION, ALL LADDERS & PLATFORMS	1	KMEM
TF-11-1460		PAINTED REAR BODY PANEL, MID-MOUNTS	1	KMEM
TF-11-2285		1/2 WIDTH S. S. OUTRIGGER COVER PANELS, FOUR RIGGER DEVICES	1	KMEM
TF-11-3000		BODY RUB RAILS, 1" X 1" EXTRUSION	1	KMEM
TF-12-1000		RUNNING BOARD STEPS (AERIALS ONLY)	1	KMEM
TF-13-3080		TURNTABLE BODY MODULE, MID MOUNT LADDERS	1	KMEM
TF-13-3200		MID-MOUNT, TURNTABLE LADDERS	1	KMEM
TF-13-5030		MID-MOUNT LADDER, BODY HANDRAILS, EXTRUDED ALUMINUM	1	KMEM
TF-14-1000		ALUMINUM WHEEL WELL LINERS	1	KMEM
TF-14-1710		POLISHED ALUMINUM FENDERETTES, TANDEM AXLE BODIES	1	KMEM
TF-14-5000		REAR MUD FLAPS	1	KMEM
TF-14-6500		PAINTED REAR TOW EYES, THROUGH REAR SHEET	1	KMEM
TF-15-1150		HOSE BED, MID-MOUNT AERIALS	1	KMEM
TF-15-1900		ALUMINUM HOSE BED FLOORING - AERIAL	1	KMEM
TF-15-3110		HOSE BED COVER, VINYL WITH QTR TURNS	1	KMEM
TF-15-3190		HYPALON MATERIAL RED IN COLOR	1	KMEM
		**** HEADER, COMPARTMENT ACCESSORIES - MIDMOUNTS**	**1**	**KMEM**
	>	**"NOTE" READ THIS BEFORE ADDING ANY ADDITIONAL GROUND LADDERS**	**1**	**KMEM**
		**** HEADER, 100-4-MM-HD GROUND LADDERS**	**1**	**KMEM**
TN-00-5065	>	CENTER LADDER STORAGE, 100-4-MM-HD	1	KMEM
TN-00-7030		HINGED PAINTED DOORS, LADDER STORAGE, MID-MOUNTS ONLY	1	KMEM
TN-01-0740		ALCO-LITE LADDER COMP, 100-4-MM-HD	1	KMEM
TN-02-1150		ALCO-LITE PEL-35 35' 2-SECTION EXTENSION LADDER (ALUM)	1	KMEM
TN-02-1170		ALCO-LITE PEL-24 24' 2-SECTION EXTENSION LADDER (ALUM)	1	KMEM
TN-02-2510		ALCO-LITE PRL-16 16' ROOF LADDER W/FOLDING HOOKS (ALUM)	2	KMEM
TN-02-7000		ALCO-LITE AEL-14 14' ATTIC EXTENSION LADDER (ALUM)	1	KMEM
TN-02-8010		ALCO-LITE FL-10 10' FOLDING ATTIC LADDER (ALUM)	1	KMEM
		**** HEADER, PIKE POLES & HOLDERS - AERIALS**	**1**	**KMEM**
TN-20-0000		ADDITIONAL ITEMS SHIPPED WITH VEHICLE, ALL AERIAL DEVICES	1	KMEM
		**** HEADER, LOOSE EQUIPMENT - AERIAL**	**1**	**KMEM**
TN-35-1015		TWO (2) ZICO #SAC-44 FOLDING WHEEL CHOCKS, (2) MTD DRIVER SIDE	1	KMEM
		**** HEADER, 100' H.D. LADDER, MID-MOUNT 4-SECTION - 14**	**1**	**KMEM**
TQ-00-1600		100' H.D. LADDER, MID-MOUNT 4-SECT. GEN, INTENT & DESIGN STD - 14	1	KMEM
TQ-00-3005		MOUNTING OF AERIAL, MID-MOUNTS	1	KMEM
TQ-00-3460		HEIGHT AND REACH, 100' 4-SECT. HD MM LADDER - 14	1	KMEM
TQ-00-4000		MATERIAL STANDARDS, ALL DEVICES	1	KMEM
TQ-00-5065		100' H.D. LADDER, MID-MOUNT 4-SECT. HYDRAULIC SYSTEM	1	KMEM

PART NO	S	DESCRIPTION	QTY	ID
TQ-00-5130		PARKER HOSE KIT - 4 JACK UNIT MID MOUNT	1	KMEM
TQ-00-6120		HYDRAULIC PUMP - PRESSURE COMPENSATED	1	KMEM
TQ-00-7030		HYDRAULIC RESERVOIR - MID MOUNT	1	KMEM
TQ-00-7070		HYDRAULIC OIL - REGULAR - A/W 46 - 120 GAL	1	KMEM
TQ-00-7115		DIVERTER VALVE, MID-MOUNT DEVICES	1	KMEM
TQ-00-7230		OUTRIGGER HYDRAULIC CONTROL VALVE - MM, PROPORTIONAL	1	KMEM
TQ-00-7450		ELECTRIC TURNTABLE HYDRAULIC CONTROL VALVE, MM LADDERS	1	KMEM
TQ-00-7505		HYDRAULIC SYSTEM FILTRATION	1	KMEM
TQ-00-8560		MID-MOUNT LADDER, "IQAN" MOTION CONTROL SYSTEM - ELECTRIC CONTROLS @ TT	1	KMEM
TQ-00-8700		HYDRAULIC PUMP PRESSURE - DISPLAY	1	KMEM
TQ-00-8710		ELEVATION ANGLE OF LADDER - DISPLAY	1	KMEM
TQ-00-8715		VERTICAL HEIGHT OF LADDER - DISPLAY	1	KMEM
TQ-00-8725		DEGREE OF ROTATION FROM VEHICLE CENTERLINE - DISPLAY	1	KMEM
TQ-00-8730		E-ZONE CAB & BODY AVOIDANCE WARNING - DISPLAY	1	KMEM
TQ-00-8735		E-ZONE SHORT JACK WARNING - DISPLAY	1	KMEM
TQ-00-8740		CRADLE ALIGNMENT MESSAGE - DISPLAY	1	KMEM
TQ-00-8750		DEVICE LOAD MONITORING - DISPLAY	1	KMEM
TQ-00-8760		E-SPEED LADDER TIP SPEED CONTROL - DISPLAY	1	KMEM
TQ-00-8765		E-CUSH RAMP CONTROL FOR ELEVATION - DISPLAY	1	KMEM
TQ-00-8770		E-CUSH RAMP CONTROL FOR EXTENSION & RETRACTION - DISPLAY	1	KMEM
TQ-00-8890		WARNING MESSAGES - TURNTABLE ONLY	1	KMEM
TQ-00-9565		100'H.D. LADDER, MID-MOUNT 4-SECT. EMERG HYD. PUMP, EPU	1	KMEM
TQ-01-1000		HOT SHIFT PTO W/CONTROLS IN CAB	1	KMEM
TQ-01-1100		FAST IDLE CONTROL FOR ALL AERIAL DEVICES	1	KMEM
TQ-02-0235		100' H.D. LADDER, MID-MOUNT 4-SECTION TORQUE BOX	1	KMEM
TQ-02-1235		100' H.D. LADDER, MID-MOUNT 4-SECTION OUTRIGGERS	1	KMEM
TQ-02-1735		100' H.D. LADDER, MM 4-SECT OUTRIGGERS - HORIZONTAL CYLINDER	1	KMEM
TQ-02-1935		100' H.D. LADDER, MM 4-SECT OUTRIGGERS - VERTICAL CYLINDERS	1	KMEM
TQ-02-2100		IQAN - OUTRIGGER STRING POTENTIOMETER - TWO (2) OUTRIGGERS	1	KMEM
TQ-02-2200		OUTRIGGER/JACK FOOT PADS, FOUR (4) JACK DEVICES	1	KMEM
TQ-02-2350		AUXILARY JACK PADS, FOUR (4) 24" X 24" x 1" POLY	1	KMEM
TQ-02-2500		OUTRIGGER INTERLOCK SYSTEM & ALARM, ALL DEVICES	1	KMEM
		****** HEADER - OUTRIGGER LIGHTING, FOUR (4) OUTRIGGERS**	**1**	**KMEM**
TQ-02-5100		NO LOLLIPOP LIGHTS ON OUTRIGGER BEAMS	1	KMEM
TQ-02-5220		HALOGEN OUTRIGGER GROUND LIGHTS - RECTANGLE, 4-OUTRIGGERS	1	KMEM
TQ-02-5275		OUTRIGGER WARNING LIGHTS FROM LIGHT PACKAGE	1	KMEM
TQ-02-6005		OUTRIGGER WARNING LIGHT ACTIVATION, PRIMARY WARNING	1	KMEM
TQ-02-6800		OUTRIGGER SCOTCHLITE, WHITE	1	KMEM
TQ-02-7080		MM LADDER, BUTTON OUTRIGGER CONTROLS - FOUR JACKS	1	KMEM
TQ-02-9220		OUTRIGGER LEVELS MID-MOUNT DEVICES; TWO (2)	1	KMEM
TQ-03-1500		100' H.D. LADDER, MID-MOUNT 4-SECTION TURNTABLE	1	KMEM
TQ-03-3010		TURNTABLE DECK - ALUMINUM TREADPLATE	1	KMEM
TQ-04-1852		HEEL PIN STEP ON TURNTABLE, 79', 103', 109' & 123' & 100' M.M. LADDERS	1	KMEM
TQ-04-1860		TURNTABLE HANDRAILS, KNURLED ALUMINUM, MID-MOUNTS	1	KMEM
TQ-04-2135		HEEL PINS - 75' & 100' M.M. LADDER	1	KMEM
TQ-04-2300		STAINLESS STEEL CRADLE ALIGNMENT ARROWS ON TURNTABLE	1	KMEM
TQ-04-2810		SAFETY CHAINS BETWEEN TURNTABLE HANDRAIL, MID-MOUNTS	1	KMEM
TQ-04-7600		100' H.D. LADDER, MID-MOUNT 4-SECTION TURNTABLE SWIVEL	1	KMEM
TQ-04-9000		IQAN - SWIVEL ROTATION ENCODER	1	KMEM
TQ-06-0520		100' H.D. LADDER, MID-MOUNT 4-SECT, LADDER CONSTRUCTION	1	KMEM
TQ-06-1950		100' H.D. 4-SECTION MM, LADDER DIMENSIONS - 14	1	KMEM
TQ-06-3000		RUNG COVERS - PHOTOLUMINESCENT, ALL DEVICES	1	KMEM
TQ-06-4005		SINGLE PAIR FOLDING STEPS @ LADDER TIP	1	KMEM
TQ-06-4100		RED SCOTCHLITE MATERIAL ON LAST 6' OF LADDER TIP	1	KMEM
TQ-06-9000		AERIAL TRAVEL SUPPORT, ALL DEVICES	1	KMEM
TQ-06-9020		CRADLE ILLUMINATION LIGHTS - HALOGEN LIGHTS	1	KMEM
TQ-07-1600		100' H.D. LADDER, MID-MOUNT 4-SECT, ELEVATION SYSTEM - 14	1	KMEM
TQ-07-2800		IQAN - INCLINOMETER	1	KMEM
TQ-07-2801		IQAN - MOMENT LOAD INDICATOR	1	KMEM

PART NO	S	DESCRIPTION	QTY	ID
TQ-07-2805		IQAN - E-CUSH CONTROL, ELEVATION SYSTEM - LADDER	1	KMEM
TQ-08-1600		100' H.D. LADDER, MID-MOUNT 4-SECT, ROTATION SYSTEM - 14	1	KMEM
TQ-08-2800		ROTATION MOTOR AND BRAKE - 41" EXTERNAL BEARINGS	1	KMEM
TQ-08-2950		SWING DRIVE ADJUSTMENT	1	KMEM
TQ-08-3000		IQAN - "E-SPEED" SAFETY SYSTEM, LADDERS	1	KMEM
TQ-08-3100		IQAN - "E-ZONE" ROTATION SAFETY SYSTEM, 2-OUTRIGGERS	1	KMEM
TQ-08-3650		IQAN - "E-ZONE" CAB & BODY PROXIMITY SYSTEM - LADDERS	1	KMEM
TQ-09-1600		100' H.D. LADDER, MID-MOUNT 4-SECT, EXTENSION/RETRACTION SYSTEM - 14	1	KMEM
TQ-09-2350		EXTENSION CYLINDERS PAINTED LADDER PAINT COLOR	1	KMEM
TQ-09-2800		IQAN - EXTENSION SYSTEM STRING POTENTIOMETER	1	KMEM
TQ-09-2810		IQAN - "E-CUSH" EXTENSION/RETRACTION SYSTEM - LADDERS	1	KMEM
TQ-09-3048		LADDER SLIDE PADS, 100' & 101' LADDER	1	KMEM
		LADDER EXTENSION NUMBERS, ALL DEVICES	**1**	**KMEM**
TQ-09-3150		LADDER LEVEL INDICATOR (BASE SECTION) - LIGHTED	1	KMEM
TQ-09-3220		LADDER, CABLE/HOSE/WIRE ROUTING, 4-SECTIONS	1	KMEM
		****** HEADER - LADDER, 120 VOLT ELECTRICAL SYSTEM & ACCESSORIES**	**1**	**KMEM**
TQ-10-0100		LADDER, 120 VOLT ELECTRICAL SYSTEM	1	KMEM
TQ-10-0125		DELETE LADDER TIP RECEPTACLE	1	KMEM
		****** HEADER - LADDER, 12 VOLT ELECTRICAL SYSTEM & ACCESSORIES**	**1**	**KMEM**
TQ-10-1018		HEEL PIN STEP LIGHTS - TECNIQ EON 3 LED LIGHTS	1	KMEM
TQ-10-1040		TURNTABLE CONTROL CONSOLE LIGHTING - LUMA BAR LED H2O	1	KMEM
TQ-10-1060		TURNTABLE CONSOLE STEP LIGHT - TECNIQ EON 3 LED	1	KMEM
TQ-10-1110		TWO (2) UNITY SPOTS @ LADDER BASE SECTION	1	KMEM
TQ-10-1210		ONE (1) UNITY SPOT & ONE (1) FLOOD @ LADDER TIP	1	KMEM
TQ-12-0010		LADDER, CONTROL STATION	1	KMEM
TQ-12-0040		MM LADDERS, CONSOLE LOCATED @ LH SIDE OF TURNTABLE, STD	1	KMEM
TQ-12-0085		PAINTED ALUMINUM TURNTABLE CONSOLE - MATCH LADDER COLOR	1	KMEM
TQ-12-1700		100' H.D. LADDER, MID-MT. 4-SECT. TURNTABLE CONTROL STATION	1	KMEM
TQ-12-2520		FIRE RESEARCH INSIGHT FLOWMETER @ TURNTABLE CONSOLE	1	KMEM
TQ-12-2595		TURNTABLE CONSOLE COVER - PAINTED RADIUS	1	KMEM
TQ-14-1200		LADDER, FIRE RESEARCH ACT -2 WAY COMMUNICATION SYSTEM - LOWER CONTROL	1	KMEM
TQ-14-1205		LADDER, FIRE RESEARCH ACT 2-WAY COMMUNICATION SYSTEM - UPPER SPEAKER/MIC	1	KMEM
TQ-18-0650		100' H.D. LADDER, M-M, 4-SECTION LADDER WATERWAY - 14	1	KMEM
TQ-18-1050		100' H.D. 4-SECTION LADDER, LADDER WATERWAY	1	KMEM
TQ-18-2520		4" HEEL PIN SWIVEL - 100'	1	KMEM
TQ-18-2600		AUTOMATIC WATER DRAIN/VENT	1	KMEM
TQ-18-3000		ALL DEVICES, WATERWAY RELIEF VALVE	1	KMEM
TQ-18-3020		MID-MOUNT AERIAL WATERWAY DRAIN, 1 1/2" VALVE	1	KMEM
TQ-18-4130	>	LADDER, AKRON #3480 "STREAMMASTER II" MONITOR	1	KMEM
TQ-18-4210	>	LADDER, AKRON #5178 NOZZLE	1	KMEM
TQ-18-4300		LADDER, AKRON MONITOR CONTROLS W/ AUTO STOW	1	KMEM
TQ-18-4505		LADDER, ELECTRIC SELECTABLE WATERWAY TROLLEY - NEW	1	KMEM
TQ-18-4950		"STORE FRONT BLITZ" DESCRIPTION	1	KMEM
TQ-20-1600		100' H.D. LADDER, MID-MOUNT 4-SECTION LADDER CAPACITIES - 14	1	KMEM
TQ-50-0100		FIRE DEPT AERIAL FAMILIARIZATION - PROVIDED BY FACTORY	1	KMEM
TQ-50-0140		FACTORY FAMILIARIZATION - FOUR (4) DAYS	1	KMEM
TQ-50-0600		AERIAL SERVICE, ALL DEVICES	1	KMEM
TQ-50-0700		WARNING DECALS, ALL DEVICES	1	KMEM
TQ-52-0100		AERIAL LADDER, MANUALS, TWO (2) SETS	1	KMEM
TQ-70-1600		100' H.D. LADDER MID-MOUNT, 4-SECTION CERT. & TESTING	1	KMEM
		****** HEADER - PAINT SECTION - ALL UNITS ******	**1**	**KMEM**
UA-00-1100		GENERAL PAINT DESCRIPTION - ALL	1	KMEM
UA-00-1200		GENERAL PRIMER & PREP DESCRIPTION - LADDER/PLATFORM	1	KMEM
UA-00-1400		GENERAL FINISH PAINT DESCRIPTION - LADDER/PLATFORM	1	KMEM
UA-00-2700		BODY BUFFING & FINISH - LADDER/PLATFORM	1	KMEM
		****** HEADER - LADDER/PLATFORM BODY PAINT ******	**1**	**KMEM**
UA-03-0100		INSIDE/UNDERSIDE BODY PAINTED BLACK - LADDER/PLATFORM	1	KMEM

PART NO	S	DESCRIPTION	QTY	ID
UA-03-0300		JOB COLOR COMPARTMENT INT W/SPATTER PAINT - LADDER/PLATFORM	1	KMEM
UA-03-0900		SINGLE COLOR BODY PAINT SCHEME - LADDER/PLATFORM	1	KMEM
UA-03-2200		PUMPHOUSE & PLUMBING PAINTED JOB COLOR - LADDER/PLATFORM	1	KMEM
		****** HEADER - TANDEM AXLE CUSTOM CHASSIS PAINT (AERIAL)**	**1**	**KMEM**
UA-05-0050		CUSTOM CAB PRIMER & PREP	1	KMEM
UA-05-0070		CUSTOM FINISH PAINT & PREP	1	KMEM
UA-05-0100		SINGLE COLOR CUSTOM CAB PAINT SCHEME	1	KMEM
UA-05-0350		CUSTOM CAB BUFFING & FINISH	1	KMEM
UA-05-0360		CUSTOM CAB INTERIOR PAINT - TEXTURED GRAY	1	KMEM
UA-05-0400		CUSTOM CHASSIS GLOSS BLACK COLOR FRAME RAILS	1	KMEM
UA-05-0505		CUSTOM CHASSIS WHEEL AND HUB PAINT - TANDEM AXLE	1	KMEM
UA-06-0200		LADDER, PAINTING, ALL DEVICES, WHITE #91528	1	KMEM
UA-06-0450		EXTENSION CYLINDERS PAINTED TO MATCH LADDER COLOR	1	KMEM
UA-06-0905		TORQUEBOX PAINT - BLACK	1	KMEM
UA-06-1100		OUTRIGER PAINT - SILVER URETHABOND 104	1	KMEM
UA-06-1205		TURNTABLE PAINT - LADDER COLOR	1	KMEM
UA-06-1215		TURNTABLE CONSOLE PAINT - LADDER COLOR	1	KMEM
UA-06-1225		LIFT CYLINDERS CONSOLE PAINT - LADDER COLOR	1	KMEM
UA-06-1500		LADDER RUST INHIBITOR - ALL DEVICES	1	KMEM
UA-06-2110	>	PAINT CODE, SINGLE COLOR, FILL IN BLANKS	1	KMEM
UA-06-2130		PAINT CODES, AERIAL DEVICE - WHITE #91528	1	KMEM
UA-06-2200		PINT OF TOUCH-UP PAINT	1	KMEM
UA-06-2510		FINALIZATION & DETAILING - LADDER/PLATFORM	1	KMEM
UA-06-2850		RUSTPROOFING WARRANTY, TEN (10) YEAR	1	KMEM
		****** HEADER, LETTERING & STRIPING - 100-5-MM-PL**	**1**	**KMEM**
UA-12-0100		COMPUTER GENERATED LETTERING	1	KMEM
UA-12-1200		GOLDLEAF W/ DROP SHADOW LETTERING ON FRONT CAB DOORS	1	KMEM
UA-12-1245		3" LETTERING ON FRONT CAB DOORS	1	KMEM
UA-12-3100		GOLDLEAF W/ DROP SHADOW LETTERING ON CAB SIDE PANEL	1	KMEM
UA-12-3145		3" LETTERING ON CAB SIDE PANEL	1	KMEM
UA-13-0100		LETTERING FONT - BASIC BLOCK TYPE FONT	1	KMEM
UA-20-0110		14" X 108" LETTERING PANELS ON BASE SECTION	1	KMEM
UA-20-0200		SIGN PANELS TO PAINTED TO MATCH AERIAL DEVICE COLOR	1	KMEM
UA-20-0500		SCOTCH-CAL W/O DROP SHADOW LETTERING FOR AERIAL	1	KMEM
UA-50-0200		NFPA REQUIRED SCOTCH-LITE STRIPINGSTRIPING - TA AERIAL	1	KMEM
UA-50-0220		8" SCOTCH-LITE STRIPE ON CAB AND BODY - TA AERIAL	1	KMEM
UA-58-5100		WHITE SCOTCH-LITE	1	KMEM
UA-80-6000		REAR CHEVRON STRIPING	1	KMEM
UA-80-6002		50% VERTICAL SURFACE	1	KMEM
UA-80-6030		6" REAR SCOTCH-LITE CHEVRON STRIPING	1	KMEM
UA-80-6070		RUBY RED & LEMON YELLOW SCOTCH-LITE	1	KMEM
		****** PROPOSED - AERIAL WARRANTY PKG, W/PUMP @ REAR OF SPEC**	**1**	**KMEM**
W6-00-000J		PROPOSED - KME WARRANTY, STARTING ON DELIVERY DATE	1	KMEM
W6-00-0010	**X** <	PROPOSED - 5 YEAR FCAM WARRANTY - CUSTOM CHASSIS	1	
		$16,500 per email Phil to Byron 9-27-16		
W6-00-003M	>	PROPOSED - 5 YEAR WARRANTY - BASE WITH CUSTOM CHASSIS	1	KMEM
W6-00-0150		PROPOSED - 5 YEAR CUMMINS BASE WARRANTY	1	KMEM
W6-00-0210		PROPOSED - 5 YEAR ALLISON EVS TRANSMISSION WARRANTY	1	KMEM
W6-00-0220		PROPOSED - 3 YEAR COOLING SYSTEM WARRANTY - CUSTOM	1	KMEM
W6-00-0230		PROPOSED - LIFETIME FRAMERAIL WARRANTY	1	KMEM
W6-00-0242		PROPOSED - SHEPPARD STEERING GEAR STANDARD - THREE YEAR WARRANTY	1	KMEM
W6-00-0254		PROPOSED - 5 YEAR MERITOR FRONT AXLE - WARRANTY	1	KMEM
W6-00-0258		PROPOSED - 5 YEAR MERITOR SINGLE AXLE REAR - WARRANTY	1	KMEM
W6-00-0270		PROPOSED - 3 YEAR MERITOR ABS - WARRANTY	1	KMEM
W6-00-0320	>	PROPOSED - 10 YEAR CAB STRUCTURAL WARRANTY	1	KMEM
W6-00-0330		PROPOSED - 10 YEAR BODY STRUCTURAL WARRANTY	1	KMEM
W6-00-0390		PROPOSED - 10 YEAR CAB & BODY CORROSION WARRANTY	1	KMEM
W6-00-0450		PROPOSED - PAINT FINISH WARRANTY, TEN (10) YEAR	1	KMEM

PART NO	S	DESCRIPTION	QTY	ID
W6-00-0470		PROPOSED - 5 YEAR LETTERING WARRANTY	1	KMEM
W6-00-0490		PROPOSED - 10 YEAR STAINLESS STEEL PIPING WARRANTY	1	KMEM
W6-00-0550		PROPOSED - REAR SUSPENSION - RIDEWELL - AIR RIDE - 3 YEAR WARRANTY	1	KMEM
W6-00-0570		PROPOSED - SAFEGUARD TECHNOLOGY - 10 YEAR - RUNG COVERS	1	KMEM
W6-00-0590		PROPOSED - 20 YEAR AERIAL LADDER WARRANTY	1	KMEM
W6-00-0630	>	PROPOSED - FIVE (5) YEAR AERIAL WATERWAY SWIVEL WARRANTY - AMITY	1	KMEM
W6-00-0650	>	PROPOSED - TEN 10 YEAR AERIAL WATERWAY WARRANTY - AMITY	1	KMEM
W6-00-0670		PROPOSED - AERIAL DEVICE REPAIR POLICY AND LIABILITY DISCLAIMER	1	KMEM
W6-00-0695		PRO - AERIAL DEVICE HYDRAULIC COMPONENT WARRANTIES	1	KMEM
W6-00-0710		PROPOSED - LIFETIME POLY TANK WARRANTY - ALL TANKS	1	KMEM
W6-00-0820		PROPOSED - WATEROUS 5 YEAR PUMP WARRANTY (PARTS & LABOR)	1	KMEM
W6-00-0823	**X**	WATEROUS FCAM 5 YR WARRANTY CORRECTION	1	
W6-00-1153	**S**	DEALER PROVIDES WARRANTY TRANSPORT PROP and REQ	1	DLR
W6-00-1330		PROPOSED - AKRON - 5 YEAR LIMITED WARRANTY	1	KMEM
W6-00-1340		PROPOSED - AKRON HEAVY DUTY VALVE - 10 YEAR WARRANTY	1	KMEM
W6-00-1500		PROPOSED - BOSTROM SEATING 5 YEAR WARRANTY	1	KMEM
WA-00-0010		"AERIAL FIRE APPARATUS" NFPA 2016 STATEMENT OF EXCEPTIONS	1	KMEM

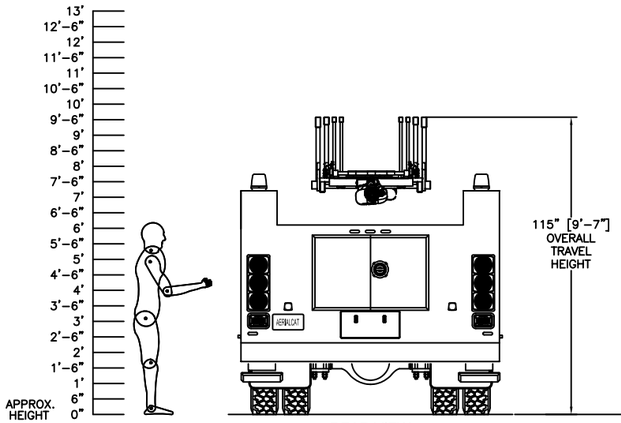

REAR VIEW

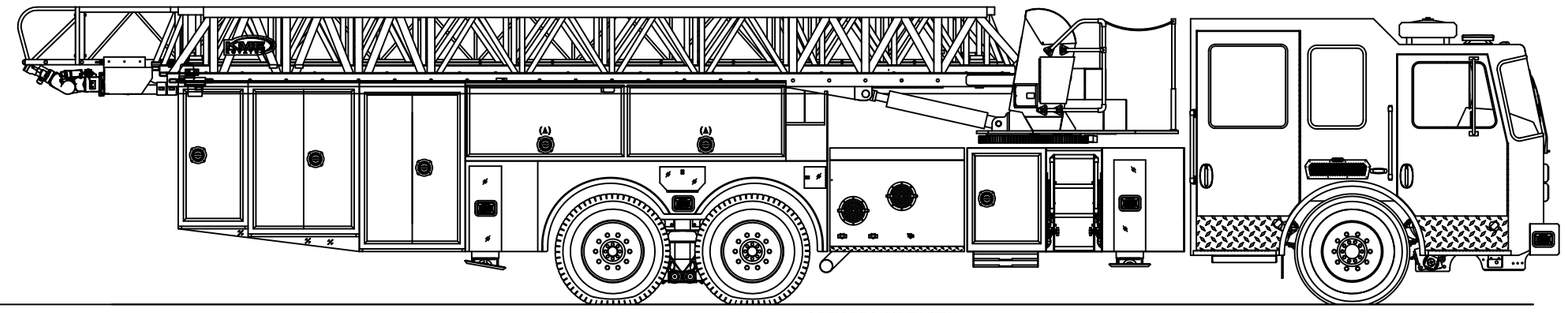

OFFICERS SIDE VIEW

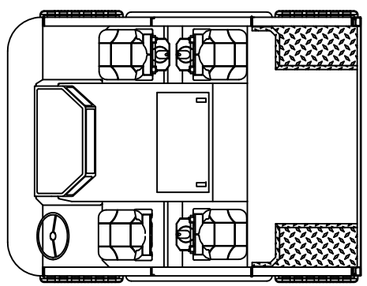

CAB INTERIOR LAYOUT

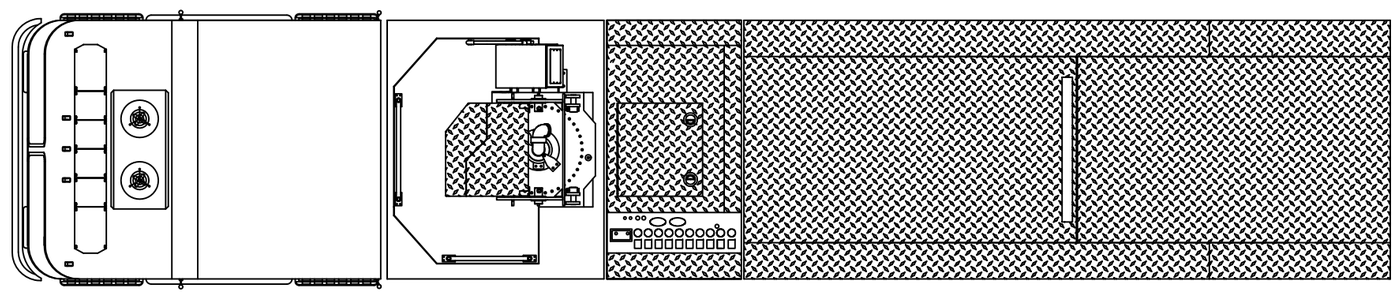

TOP VIEW

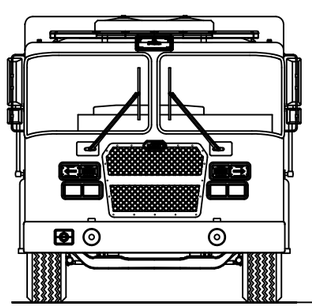

FRONT VIEW

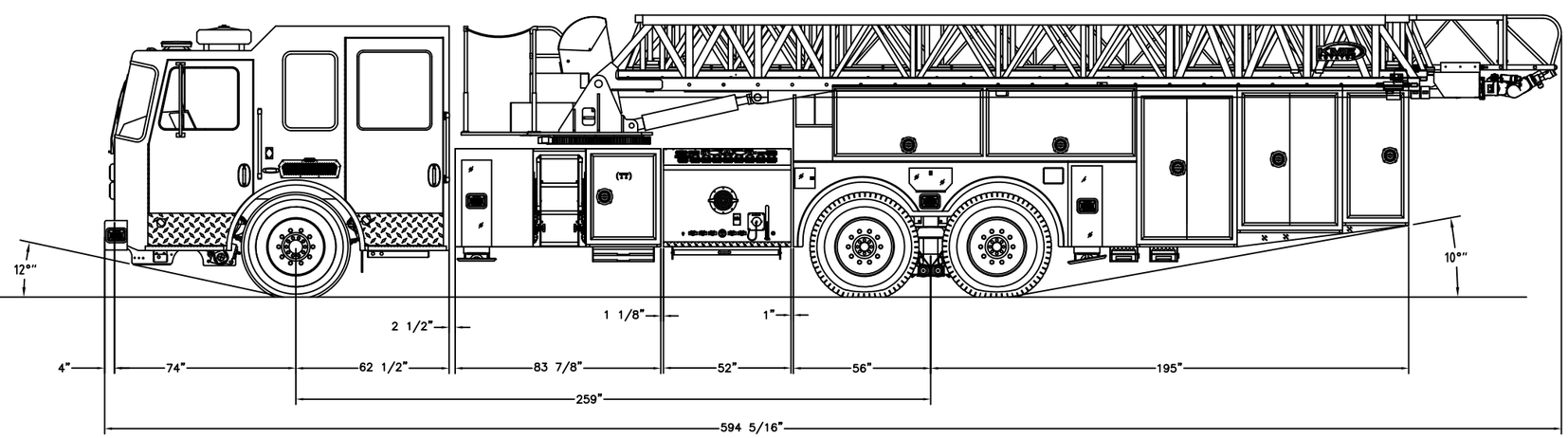

DRIVERS SIDE VIEW

CAB: 100"W PREDATOR MFD 10" RAISED ROOF
ENGINE & TRANS. CUMMINS ISX12 400 HP/ 4000 EVS
AXLES: 23,000# FRONT/58,000# REAR
PUMP: WATEROUS S100 1,500 GPM SINGLE STAGE
WATER TANK: 300 GALLONS

THIS DRAWING IS A GENERAL CONFIGURATION AND MAY NOT NECESSARILY REFLECT ALL CONTRACTUAL REQUIREMENTS. CONTRACT SPECIFICATIONS SHALL PREVAIL OVER DRAWING.

CUSTOMER APPROVAL:

NAME:

TITLE:

DATE:

SYM	DATE	REVISION DESCRIPTION	APP'D

SALES ENGINEER : TBD

DIMENSIONS ARE APPROXIMATE & MAY VARY DUE TO BUILD ADJUSTMENTS

SCALE	DWG SIZE	DRAWN BY	Z.ZSCHUNKE	DATE
NONE	B	APPROVED BY	P.HOHERCHAK	10-3-16

100' MID-MOUNT LADDER

MAPC 17 BASIC

PROPOSAL DRAWING

KME
ONE INDUSTRIAL COMPLEX - NESQUEHONING, PA 18240

KME

BASE MODEL FCAM 100 FOOT

TRACTOR DRAWN AERIAL

LADDER

“QUINT”

MAPC 18

Quote SO

MAPC/FCAM	MAPC 18 BASIC 101' TRACTOR DRAWN AERIAL

Sales Rep:

Terms:

Drawing #:
Est. Delivery Date: / /
Customer PO #:
Customer #:
QPF #:

Penalty:

Quote No: 10008-0014
10/04/2016

PART NO	S	DESCRIPTION	QTY	ID
		== TRACTOR DRAWN AERIALCAT (TDA) - 713.016 07/13/16 ==	**1**	**KMEM**
		== LETTERING & STRIPING, 100' TDA - 713.016 07/13/16 ==	**1**	**KMEM**
		== COMPARTMENT ACCESSORIES TDA - 713.016 07/13/16 ==	**1**	**KMEM**
		== AERIAL WARRANTY PACKAGE W/PUMP - 713.016 07/13/16 ==	**1**	**KMEM**
		DEALER ======= DEALER ======= DEALER	**1**	**DLR**
		QUOTE DATA VERSION: 0713.016 - 2016 DATA SET	**1**	**KMEM**
		INDEX OF PART NUMBERS	**1**	**KMEM**
		****** HEADER - CONTRACTS, PROPOSAL FORM, ETC @ FRONT OF SPECS**	**1**	**KMEM**
		****** PROPOSED - AERIAL SPEC BOILERPLATE**	**1**	**KMEM**
04-00-0000		PROPOSED - GENERAL INFORMATION - NFPA 1901	1	KMEM
04-00-0033		PROPOSED - COMPLETION INFO	1	KMEM
04-00-0040		PROPOSED - FMVSS CERTIFICATION	1	KMEM
04-00-0060		PROPOSED - RECORDS	1	KMEM
04-00-0075		PROPOSED - TOP OF THE LINE CHASSIS MULTIPLEX	1	KMEM
04-00-0107		PROPOSED - GENERAL CONSTRUCTION - AERIAL	1	KMEM
04-00-0120		PROPOSED - SINGLE LINE RESPONSIBILITY	1	KMEM
04-00-0130		PROPOSED - PRODUCT LIABILITY - $30,000,000.00	1	KMEM
04-00-0170		PROPOSED - CRITERIA & CODE CONFORMANCE - AERIAL	1	KMEM
04-00-0193		PROPOSED - PAINT PERFORMANCE CERTIFICATION	1	KMEM
04-00-0200		PROPOSED - AFTERMARKET SUPPORT WEBSITE	1	DLR
04-00-0490		PROPOSED - PRICES & PAYMENTS	1	KMEM
04-00-0540		PROPOSED - BOND REQUIREMENTS	1	KMEM
04-00-0560		PROPOSED - PERFORMANCE BOND	1	KMEM
04-00-0580		PROPOSED - NON-COLLUSION AGREEMENT	1	KMEM
04-00-0630		PROPOSED - MATERIAL & WORKMANSHIP	1	KMEM
04-00-0660		PROPOSED - CONTRACT SPECIALIST	1	KMEM
04-00-0680		PROPOSED - APPROVAL DRAWING	1	KMEM
04-00-1200		PROPOSED - DELIVERY	1	KMEM
04-00-1215		PROPOSED - INSTRUCTION MANUALS, TWO (2) SETS - CD	1	KMEM
04-00-1215	X	POWERPOINT DELIVERY - PROPOSAL FCAM AERIAL	1	
04-00-1300		PROPOSED - VEHICLE FLUIDS PLATE	1	KMEM
04-00-1500		PROPOSED - MANUFACTURE GENERATED EXACT BLUEPRINT WITH BID	1	KMEM
04-00-1521	X	PROPOSED - KME and BULLDOG FAMA MEMBERSHIP	1	

PART NO	S	DESCRIPTION	QTY	ID
04-00-1540		PROPOSED - MANUFACTURED IN THE UNITED STATES	1	KMEM
04-00-1550		PROPOSED - ISO 9001 QUALITY MANAGEMENT SYSTEM	1	KMEM
04-00-1570		PROPOSED - NFPA TREAD PLATE CERTIFICATION	1	KMEM
04-00-2440		PROPOSED - UNDERWRITERS LABORATORIES (UL) TESTING - AERIAL	1	KMEM
07-00-0015		"AERIAL FIRE APPARATUS" NFPA 2016 CHAPTERS OF COMPLIANCE	1	KMEM
08-00-0000		VEHICLE DATA PLATE DESCRIPTION	1	KMEM
14-00-0000		NFPA ROLLOVER STABILITY GENERAL STATEMENT	1	KMEM
15-00-0010	>	PROPOSED - PRINCIPAL APPARATUS DIMENSIONS & GVWR	1	KMEM
15-00-0050		!!! CRITICAL OVERALL HEIGHT REQUIREMENT !!! - "NO"	1	KMEM
15-00-0150		!!! CRITICAL OVERALL LENGTH REQUIREMENT !!! - "NO"	1	KMEM
AA-00-002A		SERVICE CENTER - PROPOSAL FCAM	1	DLR
BA-00-0355		TILLERS	1	KMEM
BA-00-3000		SEAT AND SEAT BELT ANCHOR TESTING	1	KMEM
BA-01-2010		<1> 101' TILLER WITH PUMP	1	KMEM
BA-01-2105		<2> CHASSIS, SINGLE AXLE TILLER	1	KMEM
BA-02-0815		<3> TDA PREDATOR - SINGLE AXLE	1	KMEM
		****** HEADER - 100" PREDATOR CAB ******	**1**	**KMEM**
BA-04-0805		PREDATOR CAB - BASE, 100"	1	KMEM
BA-04-0850		PREDATOR CAB - BASE - ALUMINUM CONSTRUCTION	1	KMEM
BA-04-0990		PREDATOR 100" - CRASH TESTING	1	KMEM
BA-04-0995		PREDATOR 100" - 120,000# ROOF & SIDE TESTING	1	KMEM
BA-04-1300		PREDATOR 100" - MFD CAB LENGTH (DIM - 62 1/2")	1	KMEM
BA-04-1900		PREDATOR 100" - VISTA DIMENSIONS FRONT SEATING & ENGINE ENCLOSURE	1	KMEM
BA-04-4000		10" RAISED ROOF - 100" PREDATOR	1	KMEM
BA-04-5000		CAB ROOF DRIP RAIL 100" PREDATOR/PANTHER	1	KMEM
BA-05-0260		BATTERY ACCESS DOORS - REAR STEP WELLS, EACH SIDE	1	KMEM
BA-05-0610		BARRIER HEIGHT CAB DOORS, 100" PREDATOR "MFD, LFD & X-LFD"	1	KMEM
BA-05-0650		CAST ANTI-SLIP ENTRY STEPS FOR REDUCED LENGTH CAB DOORS	1	KMEM
BA-05-0700		CAB DOORS - BOLT ON WEATHER STRIP	1	KMEM
BA-05-1015		PREDATOR DOOR LATCHES, HD LOOP STYLE LATCH - BARRIER HEIGHT DOORS	1	KMEM
BA-05-1035		LOCKING CAB DOOR , OUT + IN, LOOP STYLE LATCH	1	KMEM
BA-05-1037		KEY MODEL #2001	1	KMEM
BA-05-1103		WINDOWS, MANUAL HAND CRANK STYLE - 100"	1	KMEM
BA-05-1130		DOOR WINDOW TRIM EXTRUSION, 4 - DOOR	1	KMEM
BA-05-1325		FULL HEIGHT INTERIOR DOOR PANELS - BRUSH ALUM, 4 - DOOR	1	KMEM
BA-05-1510		SCOTCHLITE MATERIAL ON INTERIOR OF DOOR PANEL 4-DOORS	1	KMEM
		****** HEADER - CAB EXTERIOR ACCESSORIES & OPT, 100" PREDATOR**	**1**	**KMEM**
BA-05-2410		WINDSHIELD, 100" PREDATOR CAB	1	KMEM
BA-05-2425		WINDSHIELD WIPERS & WASHERS - 100" PREDATOR	1	KMEM
BA-05-2450		SIDE VIEWING WINDOWS NON-SLIDING - PREDATOR	1	KMEM
BA-05-2500		DARK TINT WINDOWS, SIDE VIEWING, REAR DOORS & REAR WALL	1	KMEM
BA-05-2600		GRAB RAILS EXTERIOR, KNURLED ALUMINUM EXTRUSION	1	KMEM
BA-05-2668		PREDATOR INTERIOR GRAB HANDLES - WHEELABRATED	1	KMEM
BA-05-2715		FRONT CAB GRILLE - FORMED STAINESS STEEL MIRROR FINISHED - 100" PREDATOR	1	KMEM
BA-05-2780		FRONT CAB GRILLE SCREEN - BLACK MESH - 100" PREDATOR/PANTHER	1	KMEM
BA-05-2815		SIDE CAB GRILLES - SHAPED BRIGHT FINISHED - 100" PREDATOR	1	KMEM
BA-05-2900		ALUMINUM CAB WHEEL LINERS	1	KMEM
BA-05-2910		ALUMINUM CAB FENDERETTES	1	KMEM
BA-05-3000		FRONT MUD FLAPS	1	KMEM
BA-05-3500		VELVAC MIRRORS " WEST COAST" HEATED / REMOTE - W/CONVEX SPOT	1	KMEM
BA-05-3690		MIRROR CONTROL IN MULTIPLEX CONTROL SCREEN	1	KMEM
BA-05-5115		INTERIOR TRIM, 100" PREDATOR	1	KMEM
BA-05-5185		CUSTOM CAB INTERIOR PAINT - JOB COLOR	1	KMEM
BA-05-5200		PREDATOR REAR INTERIOR CAB WALL, GRAY DURAWEAR UPHOLSTERY	1	KMEM
BA-05-5335		TREAD PLATE KICK PLATE ON LOWER INTERIOR REAR WALL	1	KMEM
BA-05-5530	>	STORAGE COMPARTMENTS UNDER FRONT SEATS - 100" PREDATOR	1	KMEM
BA-05-5610		BARYFOL FLOORING	1	KMEM

PART NO	S	DESCRIPTION	QTY	ID
BA-05-5650		1" ACOUSTICAL INSULATION	1	KMEM
BA-05-5824		ENGINE ENCLOSURE 100" PREDATOR FAB DASH (DURAWEAR)	1	KMEM
BA-05-5860		ENGINE ENCLOSURE MATERIAL - ALUMINUM CAB	1	KMEM
BA-05-7040		SUN VISORS, 100" PREDATOR CAB, PADDED VINYL	1	KMEM
BA-06-0400	>	DELETED - TOP ROLLOVER PROTECTION SYSTEM	1	KMEM
		****** HEADER - CAB SEATING & ACCESSORIES, 100" - PREDATOR MFD**	**1**	**KMEM**
	>	****** SEATING OPTIONS BOSTROM, 100" - PREDATOR - MFD - NON ROLLTEK**	**1**	**KMEM**
BA-06-3215		DRIVERS SEAT, BOSTROM SIERRA FX BUCKET, ABTS 2-WAY MECHANICAL	1	KMEM
BA-06-3630		OFFICERS SEAT, BOSTROM 450 SCBA, ABTS, FIXED	1	KMEM
BA-06-3930		BOSTROM "SECUREALL" SCBA BOTTLE BRACKET - OFFICER'S SEAT	1	KMEM
		MFD CAB - REAR FACING BOSTROM SEATS - NON ROLLTEK	**1**	**KMEM**
BA-06-4110		BOSTROM 450 SCBA ABTS REAR FACING, OUTBOARD, DS	1	KMEM
BA-06-4195		BOSTROM "SECUREALL" SCBA BOTTLE BRACKET - OUTBOARD, DS	1	KMEM
BA-06-4210		BOSTROM 450 SCBA ABTS REAR FACING, OUTBOARD, OS	1	KMEM
BA-06-4295		BOSTROM "SECUREALL" SCBA BOTTLE BRACKET - OUTBOARD, OS	1	KMEM
		MFD CAB - FORWARD FACING BOSTROM SEATS - NON ROLLTEK	**1**	**KMEM**
BA-06-7200		**** DELETE FORWARD FACING SEAT RISER - NOT REQUIRED	1	KMEM
BA-06-8005		BOSTROM SEATING MATERIAL, GRAY TWEED DURAWEAR	1	KMEM
BA-06-8055		NO SCBA PARADE COVERS SUPPLIED	1	KMEM
		****** HEADER - VEHICLE DATA RECORDER SYSTEMS**	**1**	**KMEM**
BA-06-9103	>	CLASS ONE SEAT BELT WARNING SYSTEM - UP TO 6 POSITIONS - ULTRAVIEW DISP	1	KMEM
BA-06-9120		FIVE (5) SEATING POSITIONS	1	KMEM
BA-06-9310		CLASS ONE VEHICLE DATA RECORDER - MULTIPLEX	1	KMEM
		****** HEADER - CAB INTERIOR ACCESSORIES & OPTIONS, 100" PREDATOR**	**1**	**KMEM**
		****** HEADER - INSTRUMENTATION & CONTROLS, 100" PREDATOR - NARROW VISTA**	**1**	**KMEM**
BA-08-0214		DASH & CENTER CONSOLE - 100" PREDATOR FAB DASH (UPHOLSTERED)	1	KMEM
BA-08-0275		INSTRUMENT PANEL, 100" PREDATOR - NARROW	1	KMEM
BA-08-0315		DIESEL EXHAUST FLUID LEVEL GAUGE	1	KMEM
BA-08-0320		ENGINE COMPRESSION BRAKE CONTROLS	1	KMEM
BA-08-0620		ULTRAVIEW 450 DISPLAY ON CAB DASH FOR ES-KEY SYSTEM	1	KMEM
BA-08-1220		INDICATOR CLUSTER, 100" PREDATOR	1	KMEM
BA-08-1265		"OUTRIGGERS NOT STOWED" INDICATOR ON DASH	1	KMEM
BA-08-1800		LOWER RIGHT AUXILIARY SWITCH PANEL - PREDATOR - FAB	1	KMEM
BA-08-1900		PUMP SHIFT CONTROL ON LOWER LEFT DASH PANEL	1	KMEM
BA-08-1950		MULTIPLEX CONTROL PUMP SHIFT SWITCH - MULTIPLEX	1	KMEM
BA-08-2005		AERIAL LADDER, LADDER POWER SWITCHES CAB (TDA)	1	KMEM
BA-08-2750		PREDATOR COMPUTER TERMINAL IN FRONT OF OFFICER (FABRICATED)	1	KMEM
BA-08-2905		OVERHEAD ABS PANEL, FLAT FACED, 100" PREDATOR	1	KMEM
BA-08-3105		HEATER/DEFROSTER & ACCESS, PREDATOR 100" - 10" RAISED ROOF	1	KMEM
BA-08-6900		HVAC CONTROL SYSTEM - INCOPORATED INTO MULTIPLEX CONTROL DISPLAY	1	KMEM
BA-08-9000		CAB TILT SYSTEM & OPTIONS	1	KMEM
BA-08-9010	>	AUXILIARY - MANUAL CAB LIFT BACKUP SYSTEM	1	KMEM
BA-08-9110		PARKING BRAKE/CAB TILT INTERLOCK	1	KMEM
		FRAME & AXLE PACKAGE, TILLER SINGLE AXLE CHASSIS	**1**	**KMEM**
BA-09-5000	>	110,000 PSI FRAME: SINGLE MAIN RAIL	1	KMEM
		HEADER - FRONT BUMPER, EXTENSIONS & ACCESSORIES	**1**	**KMEM**
BA-10-0050	>	BUMPER 12" STAINLESS STEEL CONTOUR - ALL CABS	1	KMEM
BA-10-0110		10" FRONT BUMPER EXTENSION WITH TREAD PLATE GRAVEL SHIELD	1	KMEM
BA-10-0405		TREADPLATE GRAVEL SHIELD STANDARD INSTALLATION	1	KMEM
BA-10-2010		TWO (2) PAINTED TOW HOOKS BELOW FRONT BUMPER	1	KMEM
BA-14-0150		21,500# FRONT AXLE MERITOR MFS-20-133A-N	1	KMEM
BA-14-1100		MERITOR "S" CAM BRAKES 16.5" X 6" FRONT AXLE, W/AUTO SLACK ADJUSTERS	1	KMEM
BA-14-2030		SUSPENSION FRONT - 21,500# RATING	1	KMEM
BA-14-2110		FRONT AXLE SHOCK ABSORBERS - MONROE "MAGNUM - 70"	1	KMEM
BA-14-5140		31,000# REAR AXLE MERITOR RS-30-185	1	KMEM
BA-14-6510		16.5" X 7" S-CAM BRAKES - MERITOR REAR AXLE, W/ AUTO SLACK	1	KMEM

PART NO	S	DESCRIPTION	QTY	ID
BA-15-2810		VEHICLE TOP SPEED - 2016 NFPA STATEMENT	1	KMEM
BA-15-4820	>	HENDRICKSON FIREMAAX, FMX-312 AIR RIDE- SA 31,000#	1	KMEM
		****** HEADER - BRAKE SYSTEM, SINGLE AXLE VEHICLE**	**1**	**KMEM**
BA-20-1000		BRAKE SYSTEM, SA CHASSIS	1	KMEM
BA-20-1100		ABS BRAKING FOR SINGLE REAR AXLE CHASSIS	1	KMEM
BA-20-1500		AIR RESERVOIRS 4700 CU IN SA, BASE	1	KMEM
BA-20-1800		STAINLESS STEEL AIR TANK BRACKETS - (3 TANKS)	1	KMEM
BA-20-2025		1/4 TURN DRAIN VALVES ON ALL AIR TANKS	1	KMEM
BA-20-3000		AIR DRYER, HEATED - BENDIX AD-9 12VOLT	1	KMEM
BA-20-5000		COLOR CODED SYNFLEX BRAKE LINES W/QUICK RELEASE FITTINGS - SA	1	KMEM
BA-20-5500		AIR COMPRESSOR -WABCO 18.7 CFM- STD. FOR ALL CUMMINS ENGINES	1	KMEM
BA-20-5810		BRAKE TREADLE VALVE	1	KMEM
BA-20-6010		PARKING BRAKE CONTROL - NEAR DRIVER - ALL WHEEL LOCK	1	KMEM
BA-20-6500		AUX. AIR INLET IN LH DOOR AREA (TO CHARGE VEHICLE AIR SYSTEM)	1	KMEM
		HEADER, TIRE AND WHEEL OPTIONS	**1**	**KMEM**
		HEADER, WHEELS, 21,500 FRONT AXLE - STEEL - 22.5 X 12.25	**1**	**KMEM**
BA-25-1005		FRONT WHEELS, STEEL DISC TYPE, 22.5 X 12.25, 22,500#	1	KMEM
BA-25-1015		FRONT WHEELS, LUG AND HUB TRIM (STEEL WHEELS)	1	KMEM
BA-25-2030	>	FRONT, GOODYEAR 425/65R22.5 L 24,400# G296 MSA MIXED - 68MPH	1	KMEM
BA-25-2400		GOODYEAR - FIRE SERVICE RATING - TIRE RESTRICTIONS	1	KMEM
		HEADER, TIRES & WHEELS, 31,000 SINGLE REAR AXLE	**1**	**KMEM**
BA-25-5010	>	REAR WHEELS, STEEL DISC TYPE, 22.5 X 9, SA	1	KMEM
BA-25-5035		REAR WHEELS, LUG AND HUB TRIM, SA (STEEL)	1	KMEM
BA-25-6085	>	REAR, GDYR 315/80R22.5 J 32,000# RHD II+ TRACTION - 75, SA	1	KMEM
BA-25-7400		GOODYEAR - FIRE SERVICE RATING - TIRE RESTRICTIONS	1	KMEM
BA-25-9900		TIRE PRESSURE MONITORING - LED VALVE STEM CAPS - SIX TIRES	1	KMEM
BA-26-5000		**** TIRE PRESSURE SYSTEMS MUST MATCH ON CHASSIS AND TRAILER ****	1	KMEM
		100" PREDATOR - ENGINE PACKAGE, TILLER SINGLE AXLE CHASSIS	**1**	**KMEM**
		****** 100" - HEADER, ENGINE & ENGINE COMPONENTS**	**1**	**KMEM**
BA-30-3195	>	CUMMINS ISX12 - 450 HP @ 1800 RPM TQ 1550 lb-ft @ 1100 - PREDATOR NARROW	1	KMEM
BA-30-9810		PROPOSED - ENGINE CERTIFICATION CUSTOM CHASSIS	1	KMEM
BA-32-0035		COOLING/RADIATOR, 100" PREDATOR - NARROW	1	KMEM
BA-32-0070		ENGINE COOLANT FILTER - CUMMINS ISC - ISX	1	KMEM
BA-32-0085		COOLING SYSTEM CRITERIA	1	KMEM
BA-32-0100		TRANSMISSION COOLER	1	KMEM
BA-32-0120		RADIATOR SKID PLATE	1	KMEM
BA-32-0160		CHARGED AIR COOLER (FRONT MOUNT)	1	KMEM
BA-32-0245		COOLANT FAN, W/CLUTCH - CUMMINS ISX12	1	KMEM
BA-32-0340		HEATER AND COOLANT HOSES/PIPING	1	KMEM
BA-32-0420		LOW COOLANT INDICATOR LIGHT AND ALARM IN CAB	1	KMEM
BA-33-0020	>	SECONDARY BRAKING - ENGINE COMPRESSION BRAKE	1	KMEM
BA-33-0150		FAST IDLE CONTROL FOR ALL ELECTRONIC ENGINES - SMART WHEEL	1	KMEM
BA-33-0160		ENGINE AIR CLEANER	1	KMEM
BA-33-0180		SPARK ARRESTOR	1	KMEM
BA-33-0200		ACCELERATOR PEDAL - FLOOR MOUNT	1	KMEM
BA-33-0250		REMOTE THROTTLE & INTERLOCK HARNESS	1	KMEM
BA-40-0300		ALLISON 4000EVS TRANS. - COMPRESSION BRAKE	1	KMEM
BA-40-0660		FIVE (5) SPEED AUTOMATIC TRANSMISSION - 4000 SERIES	1	KMEM
BA-40-0700		ALLISON TRANSMISSIONS, ELECTRONIC TOUCH PAD SHIFTER IN CAB	1	KMEM
BA-40-0855		TRANSMISSION OIL LEVEL SENSOR	1	KMEM
BA-40-0860		ALLISON PARK TO NEUTRAL	1	KMEM
BA-40-0910		ALLISON PRESELECT PROGRAMMING	1	KMEM
BA-40-0920		PRESELECT PROGRAMMED FOR 4TH GEAR	1	KMEM
BA-40-4720		TES-389 TRANS FLUID 4000EVS TRANSMISSION	1	KMEM
BA-45-0110		DRIVE LINES DANA-SPICER #1810 SERIES	1	KMEM
BA-49-0100		DIESEL EXHAUST FLUID TANK - 5 GALLON	1	KMEM
BA-50-0110		EXHAUST SYSTEM - DPF & SCR SYSTEM - INLINE SYSTEM	1	KMEM
BA-50-0155		ALUMINIZED STEEL EXHAUST TAILPIPE/OUTLET OS - DPF + SCR SYSTEM	1	KMEM

PART NO	S	DESCRIPTION	QTY	ID
BA-50-2500		FUEL SYSTEM	1	KMEM
BA-50-2505		FUEL TANK - 50 GALLON, STEEL	1	KMEM
BA-50-2600		STAINLESS STEEL FUEL TANK STRAPS IN LIEU OF STEEL	1	KMEM
BA-50-2625		FUEL LINES - FIBER REINFORCED HOSE	1	KMEM
BA-50-2637		DUAL FUEL LINE SHUT-OFF VALVES	1	KMEM
BA-50-2645	>	CUMMINS FUEL-WATER SEPARATOR	1	KMEM
BA-50-2670		FUEL PUMP SECONDARY ELECTRIC, REQ. ON 210" W-B OR LONGER	1	KMEM
BA-50-2700		FUEL POCKET, LEFT SIDE REAR WHEEL WELL PANEL	1	KMEM
BA-50-5050	>	STEERING - DUAL SHEPPARD POWER STEERING GEARS	1	KMEM
BA-50-5150	>	SECONDARY POWER STEERING PUMP FOR TRAILER STEERING - ISX ENGINE ONLY	1	KMEM
BA-50-7115		STEERING COLUMN - CLOCK SPRING "NARROW"	1	KMEM
BA-50-7155		18" STEERING WHEEL - 4 SPOKE - "NARROW"	1	KMEM
BA-50-9000		ROAD SAFETY KITS	1	KMEM
		****** HEADER, TILLER CHASSIS ELECTRICAL, 100" PREDATOR (OPTIONS)**	**1**	**KMEM**
		****** HEADER, TILLER W/ PUMP BODY ELECTRICAL (OPTIONS)**	**1**	**KMEM**
BE-01-0005		PREDATOR CHASSIS ELECTRICAL SYSTEM DESCRIPTION	1	KMEM
BE-01-0105		PREDATOR CHASSIS WIRING INSTALLATION	1	KMEM
BE-01-0150		DIRECT BATTERY GROUNDING STRAP - PREDATOR	1	KMEM
BE-01-0153		EMI/RFI PROTECTION	1	KMEM
BE-01-0205		PREDATOR 12 VOLT ELECTRICAL SYSTEM TESTING	1	KMEM
BE-05-0353		CLASS-1 ES-KEY MULTI-PLEXED ELECTRICAL SYSTEM 100" PREDATOR	1	KMEM
BE-05-0450		CLASS-1 ES-KEY ULTRAVIEW 450 DISPLAY	1	KMEM
BE-05-0800		INTER-LOCK MODULE FOR MULTIPLEX SYSTEM	1	KMEM
BE-05-0900		CHASSIS DIAGNOSTICS SYSTEM	1	KMEM
BE-05-1160		VOLTAGE MONITORING SYSTEM - 12 VOLT	1	KMEM
BE-05-1165		INDICATOR LIGHT AND ALARM PROVE-OUT SYSTEM	1	KMEM
BE-05-1170		SEQUENCER	1	KMEM
BE-05-1175		ELECTRICAL HARNESS INSTALLATION - 12 VOLT	1	KMEM
BE-10-0487		DELCO REMY 40SI, 320 AMP BRUSHLESS ALTERNATOR	1	KMEM
BE-15-0730		BATTERIES - SIX (6) EXIDE GROUP 31, 925CCA	1	KMEM
BE-15-1105		PREDATOR BATTERY STORAGE, STEEL, MFD, XMFD, LFD, XLFD	1	KMEM
BE-15-1500		BATTERY DISCONNECT SWITCH, ALL UNITS	1	KMEM
BE-15-1555		COLE HERSEE BATTERY JUMPER STUDS, DS BATTERY BOX	1	KMEM
BE-20-1635		120 VOLT 20 AMP SUPER AUTO EJECT FOR BATT CHARGER - CUSTOM	1	KMEM
BE-20-1715		SHORELINE RECEPTACLE LABEL - NFPA	1	KMEM
BE-20-1720		RED COVER FOR KUSSMAUL AUTO-EJECT RECEPTACLE, #091-55RD	1	KMEM
BE-20-1750		SHORELINE LOCATION - ADJACENT TO DRIVER'S DOOR	1	KMEM
BE-20-2020		KUSSMAUL MODEL 1200, 40AMP W/ 120 VAC 125PSI AIR COMP.	1	KMEM
BE-20-3220		KUSSMAUL AUTO DRAIN ACHP - 120V	1	KMEM
BE-30-0100		CONTROL SWITCHING - EATON MULTIPLEX SWITCHES - 12 ABOVE DRIVER	1	KMEM
BE-30-0120		CONTROL SWITCHING - EATON MULTIPLEX SWITCHES - 9 LOWER PANEL	1	KMEM
BE-30-2500		CONTROL SWITCHING LABELING	1	KMEM
BF-00-0515		WELDON #8080-8000-13 WHITE/RED LED INTERIOR LIGHTS (4)	1	KMEM
BF-00-5000		DOOR OPEN INDICATOR W/ INTEGRAL AUDIBLE ALARM	1	KMEM
		****** HEADER, 12V POWER/ USB CHARGING/ POWER - GROUND CIRCUITS, CUSTOM ******	**1**	**KMEM**
BF-01-6000		12 VOLT POWER AND GROUND CIRCUIT FOR ACCESSORIES IN DASH	1	KMEM
BF-01-6020		12 VOLT POWER AND GROUND CIRCUIT, BEHIND OFFICERS SEAT	1	KMEM
		****** HEADER, REAR/SIDE VISION CAMERA SYSTEMS ******	**1**	**KMEM**
BF-20-0065		DUAL HEADLIGHTS, LED, PREDATOR - PETERSON - DUAL BEZELS	1	KMEM
BF-20-0320		DAYTIME RUNNING LIGHTS, ALL CABS	1	KMEM
BG-00-0055		DUAL MODULE w/ CODE 3 65STA LED TURN SIGNAL & REQ WARN LIGHT	1	KMEM
BG-00-0460		CUST TILLER CHASSIS LED MARKER LIGHTS	1	KMEM
BG-00-0560		CUST TILLER BODY LED MARKER LIGHTS	1	KMEM
BG-00-1200		WHELEN LED MARKER LIGHTS @ TOP FRONT ROOF EDGE OF CAB	1	KMEM
BG-00-1620		TRUCK-LITE MARKER/TURN LIGHTS @ EA SIDE OF BODY - TDA	1	KMEM
BG-00-1660		TRUCK-LITE MARKER LIGHTS @ REAR OF BODY	1	KMEM
BG-00-1800		TRUCK-LITE DOT AMBER REFLECTORS @ SIDE OF BODY	1	KMEM
BG-00-1810		TRUCK-LITE DOT RED REFLECTORS @ REAR OF BODY	1	KMEM

PART NO	S	DESCRIPTION	QTY	ID
BG-00-2915		TECNIQ #L10 LED LICENSE PLATE LIGHT @ DS REAR OF BODY	1	KMEM
BG-02-2530		CODE 3, #65 LED BRAKE, REVERSE, & TURN W/ TRI HOUSING	1	KMEM
BH-04-1050		CAB STEP LIGHTS, TECNIQ EON 3 LED, ALL DEVICES	4	KMEM
BH-04-1130		BODY STEP LIGHTS, TECNIQ EON 3 LED, ALL DEVICES	4	KMEM
		****** HEADER, SCENE LIGHTS - MM / TDA**	**1**	**KMEM**
		****** HEADER, SCENE LIGHTS - LADDER/PLATFORM W/ PUMP**	**1**	**KMEM**
BH-10-7000		FRC SPECTRA 900 LED SCENE LIGHTS BEHIND FRONT CAB DOORS	1	KMEM
BH-10-8000		CONTROL SWITCHES IN CAB FOR BEHIND FRONT CAB DOOR LIGHTS	1	KMEM
BH-11-0500		NFPA (4) JW SPEAKER LED RECTANGLE GROUND LIGHTS, BELOW CAB DOORS	1	KMEM
BH-11-0560		GROUND LIGHTS, 2 LED BELOW PUMP PANEL RUNNING BOARD - RH	1	KMEM
BH-11-0585		GROUND LIGHTS, 2 LED, AT REAR BODY CORNERS - RH	1	KMEM
		****** HEADER, BROW AND CAB RADIUS LIGHTS - CUSTOM CHASSIS**	**1**	**KMEM**
		****** HEADER, TELESCOPING LIGHTS, REAR OF CAB - CUSTOM CHASSIS**	**1**	**KMEM**
BH-12-2100	>	FRC BROW LIGHT, EVOLUTION II LED, 12V, (1) ABOVE WINDSHIELD	1	KMEM
BH-13-0015		FRC EVOLUTION II LED TELESCOPING W/POLES, 12V- REAR OF CAB	1	KMEM
BH-14-0000		CONTROL SWITCHES IN CAB FOR REAR OF CAB LIGHTS	1	KMEM
BH-14-0020		CONTROL SWITCH IN CAB FOR LIGHT(S) ABOVE WINDSHIELD	1	KMEM
BH-20-0060		WIRE UPGRADE FOR 12V HIGH AMP LIGHTS - REAR OF CAB	1	KMEM
BI-00-0200		AERIAL BODY ELECTRICAL SYSTEM	1	KMEM
BI-00-0205		AERIAL BODY ELECTRICAL JUNCTION COMPARTMENT	1	KMEM
BI-00-0220		TILLERS, AERIAL DEVICE ELECTRICAL JUNCTION COMPARTMENT	1	KMEM
BI-00-0525		BODY ELECTRICAL HARNESS - ES-KEY	1	KMEM
BJ-00-5115		PUMP ENCLOSURE WORK LIGHTS - TECNIQ LED	1	KMEM
BJ-00-5165		ENGINE COMPARTMENT WORK LIGHTS - TECNIQ LED	1	KMEM
BJ-00-7110		TRACTOR ALIGNMENT LIGHT ON TRACTOR CAB ROOF HELLA MARINE NAVILED®360	1	KMEM
		COMPARTMENT LIGHTS - TDA	**1**	**KMEM**
BJ-02-1055	>	COMPT. LIGHTS, TECNIQ E18 LED	17	KMEM
		****** CUSTOM TDA NFPA WARNING LIGHT PACKAGE**	**1**	**KMEM**
BL-95-0000		NFPA COMPLIANT WARNING LIGHT PACKAGE - ALL UNITS	1	KMEM
BL-95-0100		LIGHT PACKAGE ACTUATION/CONTROLS - ALL UNITS	1	KMEM
BL-98-0000		WARNING LIGHT FLASH PATTERN - NFPA FLASH PATTERN	1	KMEM
BM-00-0206		CODE 3 UPPER PACKAGE - CUSTOM TDA	1	KMEM
BM-02-0086	>	A-UPPER, CODE 3 LED 2780NFPA P1, RX 2700 80" PRIZM II BAR	1	KMEM
BM-02-1055		C-UPPER, CODE 3 ARCH LED BEACONS - 180° SOLID COLOR	1	KMEM
BM-02-2000		B/D-UPPER REAR, COVERED BY LIGHTS IN ZONE C-UPPER	1	KMEM
BM-02-3000		B/D-UPPER FRONT, COVERED BY LIGHTS IN ZONE A-UPPER	1	KMEM
BM-07-0206		CODE 3 LOWER PACKAGE - CUSTOM TDA	1	KMEM
BM-09-0018	>	A-LOWER FRONT, CODE 3 65 SERIES LED	1	KMEM
BM-09-0098		A-LOWER FRONT MOUNTING, CUSTOM CHASSIS	1	KMEM
BM-09-1014	>	C-LOWER REAR, CODE 3 65 SERIES LED	1	KMEM
BM-09-2006	>	B/D-LOWER FRONT, CODE 3 65 SERIES LED	1	KMEM
BM-09-2098		B/D-LOWER FRONT MOUNTING, CUSTOM CHASSIS	1	KMEM
BM-09-3006	>	B/D-LOWER MID, CODE 3 65 SERIES LED	1	KMEM
BM-09-3506	>	B/D-LOWER SECONDARY MID, CODE 3 65 SERIES LED	1	KMEM
BM-09-4006	>	B/D-LOWER REAR, CODE 3 65 SERIES LED	1	KMEM
BM-15-0000		LIGHT PACKAGE NFPA CERTIFICATION - ALL UNITS	1	KMEM
		****** HEADER, OPTIONAL WARNING LIGHTS**	**1**	**KMEM**
		****** HEADER, AUDIBLE WARNING & COMMUNICATION EQUIPMENT**	**1**	**KMEM**
BW-00-0510		CHASSIS SINGLE ELECTRIC (DOT) HORN	1	KMEM
BW-00-0560		CODE 3, #CA278, BACK-UP ALARM - 87DBA	1	KMEM
BW-00-5000	>	DUAL CHROME AIR HORNS	1	KMEM
BW-00-5100		DUAL AIR HORNS RECESSED IN FRONT BUMPER, STD	1	KMEM
BW-00-5200		AIR HORN CTRL - FOOT FOR OFFICER & STEERING WHEEL FOR DRIVER	1	KMEM
BW-01-0120		SIREN, WHELEN # 295HFS2, 100W - FLUSH MOUNT	1	KMEM
BW-01-1020		ONE (1) WHELEN SA315P SPEAKER	1	KMEM
		****** HEADER, PUMP, TANK & ACCESSORIES, 100' & 101' TILLER**	**1**	**KMEM**
		BASE PUMP, ALL TILLERS	**1**	**KMEM**
DC-00-2355		WATEROUS S100, 1500 GPM SINGLE STAGE PUMP - MID MOUNT	1	KMEM

PART NO	S	DESCRIPTION	QTY	ID
DC-01-4630		WATEROUS S100 MECHANICAL PUMP SEAL	1	KMEM
DC-01-6211		WATEROUS "C20" DRIVE UNIT, WATEROUS MID-MOUNT (FRONT DRIVE)	1	KMEM
DC-01-6490		PUMP RATIO (HALE, WATEROUS OR DARLEY)	1	KMEM
DC-01-7140		WATEROUS AIR SHIFT	1	KMEM
DC-01-8590		PUMP SHIFT MANUAL OVERRIDE (HALE, WATEROUS OR DARLEY)	1	KMEM
DC-01-8615		WATEROUS PUMP SHIFT INDICATOR LIGHTS	1	KMEM
DC-01-9020		TRANSMISSION LOCK-UP (HALE, WATEROUS OR DARLEY)	1	KMEM
DC-02-1900		PUMP MOUNTS - MID-SHIP PUMPS	1	KMEM
DC-02-1990		PUMP INSTALLATION - CUSTOM	1	KMEM
DC-04-0120		MANIFOLD - DISCHARGE & SUCTION FOR 1250-2000 GPM INTERFACE PUMPING SYSTEM	1	KMEM
		****** HEADER, WATEROUS S100, PRESSURE CONTROL - MID MOUNT**	**1**	**KMEM**
DC-05-1222		FIRE RESEARCH "PUMP BOSS" PBA400 PRESSURE GOVERNOR	1	KMEM
DC-05-1295		TASK FORCE TIPS #A18 SERIES INTAKE RELIEF VALVE	1	KMEM
DC-05-2500		PUMP UL CERTIFICATION - 750 GPM & UP	1	KMEM
		WATEROUS, PUMP PRIMING PUMP AND CONTROLS	**1**	**KMEM**
DC-05-3680	>	TRIDENT "MANUAL" AIR PRIMING SYSTEM	1	KMEM
		WATEROUS, DRAINS & ACCESSORES	**1**	**KMEM**
DC-05-5110		ROTARY MASTER DRAIN VALVE	1	KMEM
DC-05-5400		DRAINS/BLEEDER "INNOVATIVE CONTROLS" LIFT UP @ ALL 1-1/2" OR LARGER	1	KMEM
DC-05-5500		SYNFLEX SUCTION, DISCHARGE, PRESSURE AND CONTROL LINES	1	KMEM
DC-10-2025		SIDE MOUNT PUMP MODULE, TILLER AERIAL	1	KMEM
DC-10-2500		PUMP MODULE - STEEL CONSTRUCTION	1	KMEM
		****** HEADER, SUCTIONS - TDA, SIDE MOUNT**	**1**	**KMEM**
DC-14-3330		WATEROUS MAIN SUCTION INLETS 6" NST, 1500 GPM S100 PUMP	1	KMEM
DC-14-5300		SHORT NECK MAIN PUMP SUCTION INLETS - DS & OS	1	KMEM
DC-14-5560	>	6" NST MAIN PUMP SUCTION PRESSURE VENTED CAPS (2)	1	KMEM
		HEADER - AUXILIARY SUCTION/S - AERIALS	**1**	**KMEM**
DC-20-1000		2 1/2" AUX. SIDE SUCTION @ DS PANEL TO REAR OF MAIN INLET	1	KMEM
DC-20-1100		2 1/2" AKRON #8800 S.S. BALL VALVE, DS REAR AUX SUCTION	1	KMEM
DC-20-1200		SWING CONTROL @ VALVE, DS REAR AUX SUCTION	1	KMEM
DC-20-9500		BEHIND PANEL MOUNT	1	KMEM
		****** HEADER - TANK TO PUMP - TILLERS**	**1**	**KMEM**
DC-25-1200		TANK TO PUMP - 3" VALVE - LADDERS & PLATFORMS	1	KMEM
DC-25-3110		3" AKRON #8800 SERIES - S.S. BALL, VALVE , TANK TO PUMP	1	KMEM
DC-25-5110		3" PUSH/PULL CONTROL FOR TANK TO PUMP	1	KMEM
		****** HEADER - TANK FILL - TILLERS**	**1**	**KMEM**
DC-30-2100		TANK FILL LINE 2" FROM PUMP - SIDE MOUNT	1	KMEM
DC-30-2300		2" AKRON #8800 SERIES - S.S. BALL TANK FILL, SIDE MOUN	1	KMEM
DC-30-6500		PUSH/PULL CONTROL FOR TANK FILL	1	KMEM
		****** DISCHARGES & ACCESSORIES, TILLER - SIDE MOUNT**	**1**	**KMEM**
		DRIVER'S SIDE #1 MAIN DISCHARGE	**1**	**KMEM**
DC-35-0010		DS MAIN DISCHARGE #1 - SIDE MOUNT	1	KMEM
DC-35-0110		2 1/2" AKRON #8800 SERIES - S.S. BALL, DS #1, SIDE MOUNT	1	KMEM
DC-35-1815		DS #1 DISCH - 2 1/2" STRAIGHT NST & 30-DEGREE NST ELBOW	1	KMEM
DC-35-2010		2 1/2" NST PRESSURE VENTED CAP - DS DISCHARGE #1	1	KMEM
DC-35-2410		PUSH/PULL CONTROL FOR DS DISCHARGE #1 -SIDE MOUNT	1	KMEM
DC-35-3110		INNOVATIVE CONTROLS LIQUID FILLED 2 1/2" PRESS GAUGE SS- DS DISCHARGE #1	1	KMEM
		DRIVER'S SIDE #2 MAIN DISCHARGE	**1**	**KMEM**
DC-35-5010		DS MAIN DISCHARGE #2 - SIDE MOUNT	1	KMEM
DC-35-5110		2 1/2" AKRON #8800 SERIES - S.S. BALL, DS #2, SIDE MOUNT	1	KMEM
DC-35-6815		DS #2 DISCH - 2 1/2" STRAIGHT NST & 30-DEGREE NST ELBOW	1	KMEM
DC-35-7010		2 1/2" NST PRESSURE VENTED CAP - DS DISCHARGE #2	1	KMEM
DC-35-7410		PUSH/PULL CONTROL FOR DS DISCHARGE #2 -SIDE MOUNT	1	KMEM
DC-35-8110		INNOVATIVE CONTROLS LIQUID FILLED 2 1/2" PRESS GAUGE SS- DS DISCHARGE #2	1	KMEM
		OFFICER'S SIDE #1 MAIN DISCHARGE	**1**	**KMEM**
DC-39-0010	>	OS MAIN DISCHARGE #1 - SIDE MOUNT	1	KMEM

PART NO	S	DESCRIPTION	QTY	ID
DC-39-0110		2 1/2" AKRON #8800 SERIES - S.S. BALL, OS #1, SIDE MOUNT	1	KMEM
DC-39-1815		OS #1 DISCH - 2 1/2" STRAIGHT NST & 30-DEGREE NST ELBOW	1	KMEM
DC-39-2010		2 1/2" NST PRESSURE VENTED CAP - OS DISCHARGE #1	1	KMEM
DC-39-2410		PUSH/PULL CONTROL FOR OS DISCHARGE #1 -SIDE MOUNT	1	KMEM
DC-39-3110		INNOVATIVE CONTROLS LIQUID FILLED 2 1/2" PRESS GAUGE SS- OS DISCHARGE #1	1	KMEM
		OFFICER'S SIDE #2 MAIN DISCHARGE	**1**	**KMEM**
DC-39-5010	>	OS MAIN DISCHARGE #2 - SIDE MOUNT	1	KMEM
DC-39-5110		2 1/2" AKRON #8800 SERIES - S.S. BALL, OS #2, SIDE MOUNT	1	KMEM
DC-39-6815		OS #2 DISCH - 2 1/2" STRAIGHT NST & 30-DEGREE NST ELBOW	1	KMEM
DC-39-7010		2 1/2" NST PRESSURE VENTED CAP - OS DISCHARGE #2	1	KMEM
DC-39-7410		PUSH/PULL CONTROL FOR OS DISCHARGE #2 -SIDE MOUNT	1	KMEM
DC-39-8110		INNOVATIVE CONTROLS LIQUID FILLED 2 1/2" PRESS GAUGE SS- OS DISCHARGE #2	1	KMEM
		CROSSLAY #1 DISCHARGE	**1**	**KMEM**
DC-47-0400		CROSSLAY #1, 1 1/2" - AERIAL	1	KMEM
DC-47-1110		CROSSLAY #1 CAPACITY - 200' OF 1 3/4" HOSE	1	KMEM
DC-47-1410		CROSSLAY #1 - DOUBLE STACK HOSE DESIGN	1	KMEM
DC-47-1510		1 1/2" NST CHICKSAN SWIVEL - CROSSLAY #1	1	KMEM
DC-47-2110		CROSSLAY #1, PLUMBING, 2" STAINLESS STEEL PIPING	1	KMEM
DC-47-2210		2" AKRON #8800 SERIES - S.S. BALL, VALVE CROSSLAY #1, DISCH	1	KMEM
DC-47-2610		PUSH/PULL 1/4 TURN CONTROL CROSSLAY #1	1	KMEM
DC-47-3210		INNOVATIVE CONTROLS LIQUID FILLED 2 1/2" PRESS GAUGE SS - CROSSLAY #1	1	KMEM
		CROSSLAY #2 DISCHARGE	**1**	**KMEM**
DC-47-5400		CROSSLAY #2, 1 1/2" - AERIAL	1	KMEM
DC-47-6110		CROSSLAY #2 CAPACITY - 200' OF 1 3/4" HOSE	1	KMEM
DC-47-6410		CROSSLAY #2 - DOUBLE STACK HOSE DESIGN	1	KMEM
DC-47-6510		1 1/2" NST CHICKSAN SWIVEL - CROSSLAY #2	1	KMEM
DC-47-7110		CROSSLAY #2, PLUMBING, 2" STAINLESS STEEL PIPING	1	KMEM
DC-47-7210		2" AKRON #8800 SERIES - S.S. BALL, VALVE CROSSLAY #2,	1	KMEM
DC-47-7610		PUSH/PULL 1/4 TURN CONTROL CROSSLAY #2	1	KMEM
DC-47-8210		INNOVATIVE CONTROLS LIQUID FILLED 2 1/2" PRESS GAUGE SS - CROSSLAY #2	1	KMEM
		CROSSLAY & SPEEDLAY OPTIONS - RM AERIAL	**1**	**KMEM**
DC-50-7015	>	VINYL CROSS LAY COVER	1	KMEM
DC-50-7030		CROSSLAY COVER RED IN COLOR	1	KMEM
		PUMP PANELS & ACCESSORIES	**1**	**KMEM**
DD-65-0515		SIDE MOUNT PUMP PANEL - TDA	1	KMEM
DD-65-4115		SIDE MOUNT PANELS - 12 GAUGE BRUSHED STAINLESS STEEL	1	KMEM
DD-65-4710		VERTICALLY HINGED GAUGE PANEL - SIDE MOUNT	1	KMEM
DD-65-4810		OFFICER SIDE VERTICALLY HINGED PUMP ACCESS DOOR - SIDE MOUNT	1	KMEM
DD-65-5150		PANEL FASTENERS	1	KMEM
DD-65-5510		CAPS AND ADAPTERS SAFETY TETHER - BALL CHAIN	1	KMEM
DD-65-8820		PUMP PANEL DISCH./SUCTION TRIM PLATES, HIGH POLISHED	1	KMEM
DD-65-9000		DISCHARGE GAUGE TRIM BEZELS	1	KMEM
DD-65-9110		IDENTIFICATION PLATES	1	KMEM
DD-66-0100		PUMP OPERATOR'S PANEL LIGHT SHIELD	1	KMEM
DD-66-0135		TECNIQ E18 LED LIGHTS - LIGHT SHIELD	1	KMEM
DD-66-2100		OS PUMP PANEL LIGHTING	1	KMEM
DD-66-2130		TECNIQ EON 3 LED LIGHTS - OS PUMP PANEL	1	KMEM
		PUMP OPERATOR'S PANEL - SIDE MOUNT, AERIAL	**1**	**KMEM**
DD-70-2332		FIRE RESEARCH "PUMP BOSS" PRESSURE GOVERNOR CONTROL @ PANEL	1	KMEM
DD-70-2410		PUMP PRESSURE & VACUUM TEST PORTS @ PANEL	1	KMEM
DD-70-4120		MASTER PRESSURE & COMPOUND GAUGES - 4" NOMINAL GAUGES	1	KMEM
DD-70-4220		4" INNOVATIVE CONTROLS MASTER PRESSURE AND COMPOUND GAUGES	1	KMEM
DD-70-4680		PRESSURE & COMPOUND GAUGE RANGES - SINGLE STAGE	1	KMEM
DD-70-4900		AUXILIARY ENGINE COOLER	1	KMEM
		WATER TANK LEVEL GAUGE - AERIAL	**1**	**KMEM**

PART NO	S	DESCRIPTION	QTY	ID
DD-72-0210		IC, SL ULTRA-BRIGHT 10 LIGHT LED WATER TANK GAUGE - PUMP	1	KMEM
DD-72-1100	>	IC WATER LEVEL - 1/4" NPT PRESS TRANSDUCER @ BOTTOM OF TANK	1	KMEM
DD-80-0110		SLIDE-OUT STEP @ DRIVER'S PUMP OPERATOR'S PANEL	1	KMEM
DE-00-1080	>	**** HEADER, 100' & 101' TDA, WATER TANK	1	KMEM
		WATER TANKS/OPTIONS AERIALS	**1**	**KMEM**
DE-05-1500	>	UPF POLYIIE TANK, 250 GAL. - AERIAL	1	KMEM
DE-05-6000		TANK DESCRIPT, CONSTR AND MOUNT, UPF POLY IIE TANK	1	KMEM
JA-00-0100		BODY AND COMPARTMENT HEADER (ALL AERIAL DEVICES)	1	KMEM
JA-00-5090		GENERAL ALUMINUM BODY DESCRIPTION FOR 100' TILLER AERIALS	1	KMEM
TF-00-8850		TILLER, T-T ACCESS LADDER TRACTOR CAB, DRIVER SIDE - PUMP (SWITCH BACK)	1	KMEM
TF-00-8950		TILLER TRACTOR, DS ACCESS LADDER FORWARD OF FENDER (SWITCH BACK)	1	KMEM
TF-09-0300	>	COMPARTMENTATION, 101-TIL STYLE #1H	1	KMEM
		****** HEADER, TDA BODY OPTIONS**	**1**	**KMEM**
TF-10-0100		BEVELED OVERLAPPING DOORS, ALL COMPARTMENTS, ALL DEVICES	1	KMEM
TF-10-1900		BRUSHED FINISHED DOOR PANS - 2" THICK DOORS	1	KMEM
TF-10-2700		DOOR HINGE FOR BEVELED OVERLAPPING HINGED DOORS	1	KMEM
TF-10-2800		DOOR SEAL FOR BEVELED OVERLAPPING HINGED DOORS	1	KMEM
TF-10-2940		ROTARY LATCHES WITH D-RING HANDLES	1	KMEM
TF-10-3150		GAS SHOCK ON HORIZONTALLY & VERTICALLY HINGED DOORS	1	KMEM
TF-10-6000		COMPARTMENT FLOORS (AERIALS ONLY)	1	KMEM
TF-11-0500		COMPARTMENT GENERAL DESCRIPTION, ALL LADDERS & PLATFORMS	1	KMEM
TF-11-1470		PAINTED REAR BODY PANEL, TILLERS	1	KMEM
TF-11-2250		STAINLESS STEEL OUTRIGGER COVER PANEL, TILLER DEVICES	1	KMEM
TF-11-3030		BODY RUB RAILS, TREAD PLATE	1	KMEM
TF-12-1000		RUNNING BOARD STEPS (AERIALS ONLY)	1	KMEM
TF-13-3500		TILLER, TILLER CAB ACCESS LADDERS	1	KMEM
TF-13-5060		TILLER, BODY HANDRAILS	1	KMEM
TF-14-1100		ALUMINUM WHEEL WELL LINERS, TILLER TRAILER	1	KMEM
TF-14-1705		POLISHED ALUMINUM FENDERETTES, TILLER TRAILER AXLE	1	KMEM
TF-14-2000		TILLER TRACTOR, REAR WHEEL WELLS & FENDERS - ROLLED TREADPLATE	1	KMEM
TF-14-2070		TILLER TRACTOR, POLISHED ALUMINUM FENDERETTES	1	KMEM
TF-14-5005		REAR MUD FLAPS, TILLER ONLY	1	KMEM
TF-14-6500		PAINTED REAR TOW EYES, THROUGH REAR SHEET	1	KMEM
		****** HEADER, COMPARTMENT ACCESSORIES - TDA**	**1**	**KMEM**
	>	**"NOTE" READ THIS BEFORE ADDING ANY ADDITIONAL GROUND LADDERS**	**1**	**KMEM**
		****** HEADER, 101 TDA GROUND LADDERS**	**1**	**KMEM**
TN-00-5100	>	CENTER LADDER STORAGE, 101' LADDER, TILLER	1	KMEM
TN-00-7050		HINGED PAINTED ALUM DOOR, LADDER STORAGE, TILLER ONLY	1	KMEM
TN-01-1040		ALCO-LITE LADDER COMP, 101' TILLER, 115 FEET COMP	1	KMEM
TN-02-1150		ALCO-LITE PEL-35 35' 2-SECTION EXTENSION LADDER (ALUM)	1	KMEM
TN-02-1170		ALCO-LITE PEL-24 24' 2-SECTION EXTENSION LADDER (ALUM)	1	KMEM
TN-02-2510		ALCO-LITE PRL-16 16' ROOF LADDER W/FOLDING HOOKS (ALUM)	2	KMEM
TN-02-7000		ALCO-LITE AEL-14 14' ATTIC EXTENSION LADDER (ALUM)	1	KMEM
TN-02-8010		ALCO-LITE FL-10 10' FOLDING ATTIC LADDER (ALUM)	1	KMEM
		****** HEADER, PIKE POLES & HOLDERS - AERIALS**	**1**	**KMEM**
TN-20-0000		ADDITIONAL ITEMS SHIPPED WITH VEHICLE, ALL AERIAL DEVICES	1	KMEM
		****** HEADER, 101' TILLER TRAILER**	**1**	**KMEM**
TP-00-0450		TILLER TRAILER FRAME ASSEMBLY, 101' LADDER	1	KMEM
TP-00-0480		TILLER TRAILER WHEELBASE - 343"	1	KMEM
TP-00-0505		TRAILER, STEERING AXLE, MERITOR MFS-20-133A-N, 23,000	1	KMEM
TP-00-0550		TRAILER, MERITOR STEER AXLE EX-225 DISK BRAKES	1	KMEM
TP-00-0600		TILLER TRAILER, SUSPENSION, RIDEWELL RAS-227 AIR RIDE	1	KMEM
TP-00-0705		TILLER TRAILER, STEERING AXLE PAINTED ALUMINUM WHEELS	1	KMEM
TP-00-0750		TILLER TRAILER, GOODYEAR G296 MSA TIRES 425/65R X 22.5, 24,400#	1	KMEM
TP-00-0800		TIRE PRESSURE MONITORING - VALVE STEM CAPS - TDA TIRES	1	KMEM
TP-00-0830		**** TIRE PRESSURE SYSTEMS MUST MATCH ON CHASSIS AND TRAILER ****	1	KMEM

PART NO	S	DESCRIPTION	QTY	ID
TP-00-0850		TILLER TRAILER, STEERING SYSTEM, ROSS TA-70	1	KMEM
TP-00-0875		TILLER TRAILER, STEERING PUMP - DIRECT DRIVE ON CUMMIN ISX ENGINE	1	KMEM
TP-00-0950		TILLER TRAILER, 100' & 101' LADDER, FIFTH WHEEL PIVOT	1	KMEM
		****** HEADER, TILLER CAB & OPTIONS**	**1**	**KMEM**
TP-50-1000		TILLER CAB, GENERAL DESCRIPTION	1	KMEM
TP-50-1100		TILLER CAB, INTERIOR	1	KMEM
TP-50-1150		TILLER CAB, INTERIOR PAINT - JOB COLOR	1	KMEM
TP-50-1210		TILLERMAN SEAT, BOSTROM SIERRA LBRX /5 HD-R, LOW BACK BUCKET SEAT	1	KMEM
TP-50-1410		BOSTROM SEATING MATERIAL, BLACK DURAWEAR	1	KMEM
TP-50-1520		TILLER CAB SEAT, RED LAP SEAT BELT	1	KMEM
TP-50-1550		TILLER CAB WIND/GLASS, "NO POST VISION", SLIDING DOORS	1	KMEM
TP-50-1600		TILLER CAB, WINDSHIELD WIPERS, SINGLE PANOGRAPHIC	1	KMEM
TP-50-1610		TILLER CAB, STEERING WHEEL/COLUMN	1	KMEM
TP-50-1650		TILLER CAB, LEXAN SUNVISOR	1	KMEM
TP-50-1800		TILLER CAB, ALUMINUM KNURLED GRAB RAILS, EACH SIDE	1	KMEM
TP-50-1900		TILLER CAB, OVERTON MODEL #34732, 4" x 8" SKI MIRRORS; INTERIOR	1	KMEM
TP-50-2000		TILLER CAB, SLIDING DOORS	1	KMEM
TP-50-5000		TILLER CAB, INSTRUMENT & SWITCH PANEL	1	KMEM
TP-50-5010		TILLER CAB, TURNSIGNAL INDICATORS, WELDON #9186-1500-20, AMBER, DASH MOUNTED	1	KMEM
TP-50-5020		TILLER CAB, WELDON #8080-6978-68 WHITE/RED INTERIOR LIGHT	1	KMEM
TP-50-5200		TILLER CAB, PARK BRAKE INTERLOCK WARNING - CENTER WHEEL BUTTON	1	KMEM
TP-50-5210		TILLER CAB, SAFETY START SYSTEM - TILLER CAB STEERING COLUMN (HIGH BEAM SWITCH)	1	KMEM
TP-50-5300		TILLER CAB, BUZZER - LINEMASTER #491-S FOOT SWITCHES	1	KMEM
TP-50-6050		TILLER CAB, HEATER - BUS AIR 12VDC - 1100 BTU	1	KMEM
		****** HEADER, 101' TILLER LADDER**	**1**	**KMEM**
TQ-00-2100		101' LADDER, TILLER GEN, INTENT & DESIGN STANDARDS	1	KMEM
TQ-00-3050		MOUNTING OF AERIAL, TILLERS	1	KMEM
TQ-00-3520		HEIGHT AND REACH, 101' TILLER	1	KMEM
TQ-00-4000		MATERIAL STANDARDS, ALL DEVICES	1	KMEM
TQ-00-5080		100' & 101' LADDER, TILLER. HYDRAULIC SYSTEM	1	KMEM
TQ-00-5140		PARKER HOSE KIT - 2 JACK UNIT TDA	1	KMEM
TQ-00-6150		HYDRAULIC PUMP - PRESSURE COMPENSATED (TDA)	1	KMEM
TQ-00-7040		HYDRAULIC RESERVOIR - TDA	1	KMEM
TQ-00-7065		HYDRAULIC OIL - REGULAR - A/W 46 - 60 GAL	1	KMEM
TQ-00-7120		DIVERTER VALVE, TDA	1	KMEM
TQ-00-7240		ELECTRIC OUTRIGGER HYDRAULIC CONTROL VALVE - TDA, BANG BANG	1	KMEM
TQ-00-7480		ELECTRIC TURNTABLE HYDRAULIC CONTROL VALVE, TDA LADDERS	1	KMEM
TQ-00-7510		HYDRAULIC SYSTEM FILTRATION, TDA	1	KMEM
TQ-00-8580		TRACTOR DRAWN LADDER, "IQAN" MOTION CONTROL SYSTEM - ELECTRIC CONTROLS @ TT	1	KMEM
TQ-00-8700		HYDRAULIC PUMP PRESSURE - DISPLAY	1	KMEM
TQ-00-8710		ELEVATION ANGLE OF LADDER - DISPLAY	1	KMEM
TQ-00-8715		VERTICAL HEIGHT OF LADDER - DISPLAY	1	KMEM
TQ-00-8725		DEGREE OF ROTATION FROM VEHICLE CENTERLINE - DISPLAY	1	KMEM
TQ-00-8735		E-ZONE SHORT JACK WARNING - DISPLAY	1	KMEM
TQ-00-8740		CRADLE ALIGNMENT MESSAGE - DISPLAY	1	KMEM
TQ-00-8750		DEVICE LOAD MONITORING - DISPLAY	1	KMEM
TQ-00-8760		E-SPEED LADDER TIP SPEED CONTROL - DISPLAY	1	KMEM
TQ-00-8765		E-CUSH RAMP CONTROL FOR ELEVATION - DISPLAY	1	KMEM
TQ-00-8770		E-CUSH RAMP CONTROL FOR EXTENSION & RETRACTION - DISPLAY	1	KMEM
TQ-00-8890		WARNING MESSAGES - TURNTABLE ONLY	1	KMEM
TQ-00-9580		100' & 101' LADDER, TILLER. EMERG HYD. PUMP, EPU	1	KMEM
TQ-01-1010		PTO CONTROLS IN CAB FOR ALL TILLER AERIAL DEVICES	1	KMEM
TQ-01-1100		FAST IDLE CONTROL FOR ALL AERIAL DEVICES	1	KMEM
TQ-02-0315		101' LADDER, TILLER TORQUE BOX	1	KMEM

PART NO	S	DESCRIPTION	QTY	ID
TQ-02-1315		101' LADDER, TILLER OUTRIGGERS, 16'	1	KMEM
TQ-02-1785		101' LADDER, TILLER OUTRIGGERS - HORIZONTAL CYLINDERS	1	KMEM
TQ-02-1985		101' LADDER, TILLER OUTRIGGERS - VERTICAL CYLINDERS	1	KMEM
TQ-02-2100		IQAN - OUTRIGGER STRING POTENTIOMETER - TWO (2) OUTRIGGERS	1	KMEM
TQ-02-2260		OVERSIZED OUTRIGGER/JACK FOOT PADS, TILLER DEVICES	1	KMEM
TQ-02-2500		OUTRIGGER INTERLOCK SYSTEM & ALARM, ALL DEVICES	1	KMEM
		****** HEADER - OUTRIGGER LIGHTING, TWO (2) OUTRIGGERS**	**1**	**KMEM**
TQ-02-5100		NO LOLLIPOP LIGHTS ON OUTRIGGER BEAMS	1	KMEM
TQ-02-5205		LED OUTRIGGER GROUND LIGHTS - GROTE WHITELIGHT, 2-OUTRIGGERS	1	KMEM
TQ-02-5275		OUTRIGGER WARNING LIGHTS FROM LIGHT PACKAGE	1	KMEM
TQ-02-6005		OUTRIGGER WARNING LIGHT ACTIVATION, PRIMARY WARNING	1	KMEM
TQ-02-6800		OUTRIGGER SCOTCHLITE, WHITE	1	KMEM
TQ-02-7520		100' & 101' LADDER, TILLER ELECTRIC OUTRIGGER CONTROLS	1	KMEM
TQ-02-9230		OUTRIGGER LEVEL SIDE TO SIDE, ALL TILLER DEVICES	1	KMEM
TQ-03-1650		101' LADDER, TILLER TURNTABLE	1	KMEM
TQ-03-3010		TURNTABLE DECK - ALUMINUM TREADPLATE	1	KMEM
TQ-03-3500		TDA NOTICE!!! TURNTABLE DECK	1	KMEM
TQ-04-1852		HEEL PIN STEP ON TURNTABLE, 79', 103', 109' & 123' & 100' M.M. LADDERS	1	KMEM
TQ-04-1855		TURNTABLE HANDRAILS, KNURLED ALUMINUM, 3-SIDES	1	KMEM
TQ-04-2145		HEEL PINS - 100' & 101' TDA	1	KMEM
TQ-04-2300		STAINLESS STEEL CRADLE ALIGNMENT ARROWS ON TURNTABLE	1	KMEM
TQ-04-2800		SAFETY CHAINS BETWEEN TURNTABLE HANDRAIL, REAR MOUNTS & TDA	1	KMEM
TQ-04-7900		101' LADDER, TILLER TURNTABLE SWIVEL	1	KMEM
TQ-04-9000		IQAN - SWIVEL ROTATION ENCODER	1	KMEM
TQ-06-0750		101' LADDER, TILLER, LADDER CONSTRUCTION	1	KMEM
TQ-06-0900		STAINLESS STEEL EGRESS W/TIP SKID GAURDS	1	KMEM
TQ-06-2080		101' H.D. 4-SECTION TILLER, LADDER DIMENSIONS	1	KMEM
TQ-06-3000		RUNG COVERS - PHOTOLUMINESCENT, ALL DEVICES	1	KMEM
TQ-06-4005		SINGLE PAIR FOLDING STEPS @ LADDER TIP	1	KMEM
TQ-06-4100		RED SCOTCHLITE MATERIAL ON LAST 6' OF LADDER TIP	1	KMEM
TQ-06-9000		AERIAL TRAVEL SUPPORT, ALL DEVICES	1	KMEM
TQ-06-9035		CRADLE ILLUMINATION LIGHTS - GROTE WHITELIGHT LED	1	KMEM
TQ-07-2100		101' LADDER, TILLER, ELEVATION SYSTEM	1	KMEM
TQ-07-2800		IQAN - INCLINOMETER	1	KMEM
TQ-07-2801		IQAN - MOMENT LOAD INDICATOR	1	KMEM
TQ-07-2805		IQAN - E-CUSH CONTROL, ELEVATION SYSTEM - LADDER	1	KMEM
TQ-08-2100		101' LADDER, TILLER, ROTATION SYSTEM	1	KMEM
TQ-08-2800		ROTATION MOTOR AND BRAKE - 41" EXTERNAL BEARINGS	1	KMEM
TQ-08-2950		SWING DRIVE ADJUSTMENT	1	KMEM
TQ-08-3000		IQAN - "E-SPEED" SAFETY SYSTEM, LADDERS	1	KMEM
TQ-08-3100		IQAN - "E-ZONE" ROTATION SAFETY SYSTEM, 2-OUTRIGGERS	1	KMEM
TQ-09-2100		101' LADDER, TILLER, EXTENSION/RETRACTION SYSTEM	1	KMEM
TQ-09-2350		EXTENSION CYLINDERS PAINTED LADDER PAINT COLOR	1	KMEM
TQ-09-2800		IQAN - EXTENSION SYSTEM STRING POTENTIOMETER	1	KMEM
TQ-09-2810		IQAN - "E-CUSH" EXTENSION/RETRACTION SYSTEM - LADDERS	1	KMEM
TQ-09-3048		LADDER SLIDE PADS, 100' & 101' LADDER	1	KMEM
		LADDER EXTENSION NUMBERS, ALL DEVICES	**1**	**KMEM**
TQ-09-3150		LADDER LEVEL INDICATOR (BASE SECTION) - LIGHTED	1	KMEM
TQ-09-3250		LADDER, CABLE/HOSE/WIRE ROUTING, 101' LADDER	1	KMEM
		****** HEADER - LADDER, 120 VOLT ELECTRICAL SYSTEM & ACCESSORIES**	**1**	**KMEM**
TQ-10-0100		LADDER, 120 VOLT ELECTRICAL SYSTEM	1	KMEM
TQ-10-0125		DELETE LADDER TIP RECEPTACLE	1	KMEM
		****** HEADER - LADDER, 12 VOLT ELECTRICAL SYSTEM & ACCESSORIES**	**1**	**KMEM**
TQ-10-1018		HEEL PIN STEP LIGHTS - TECNIQ EON 3 LED LIGHTS	1	KMEM
TQ-10-1040		TURNTABLE CONTROL CONSOLE LIGHTING - LUMA BAR LED H2O	1	KMEM
TQ-10-1060		TURNTABLE CONSOLE STEP LIGHT - TECNIQ EON 3 LED	1	KMEM
TQ-10-1115		TWO (2) UNITY LED SPOTS @ LADDER BASE SECTION	1	KMEM
TQ-10-1242		TWO (2) UNITY LED SPOT LIGHTS @ LADDER TIP	1	KMEM
TQ-12-0010		LADDER, CONTROL STATION	1	KMEM
TQ-12-0060		TDA LADDERS, CONSOLE LOCATED @ LH SIDE OF TURNTABLE, STD	1	KMEM

PART NO	S	DESCRIPTION	QTY	ID
TQ-12-0085		PAINTED ALUMINUM TURNTABLE CONSOLE - MATCH LADDER COLOR	1	KMEM
TQ-12-2100		101' LADDER, TILLER TURNTABLE CONTROL STATION	1	KMEM
TQ-12-2520		FIRE RESEARCH INSIGHT FLOWMETER @ TURNTABLE CONSOLE	1	KMEM
TQ-12-2595		TURNTABLE CONSOLE COVER - PAINTED RADIUS	1	KMEM
TQ-14-1200		LADDER, FIRE RESEARCH ACT -2 WAY COMMUNICATION SYSTEM - LOWER CONTROL	1	KMEM
TQ-14-1205		LADDER, FIRE RESEARCH ACT 2-WAY COMMUNICATION SYSTEM - UPPER SPEAKER/MIC	1	KMEM
TQ-18-0800		101' LADDER, TILLER LADDER WATERWAY SYSTEM	1	KMEM
TQ-18-1420		101' LADDER, TILLER LADDER WATERWAY	1	KMEM
TQ-18-2520		4" HEEL PIN SWIVEL - 100'	1	KMEM
TQ-18-2600		AUTOMATIC WATER DRAIN/VENT	1	KMEM
TQ-18-3000		ALL DEVICES, WATERWAY RELIEF VALVE	1	KMEM
TQ-18-3025		TILLER AERIAL WATERWAY DRAIN, 1 1/2" VALVE	1	KMEM
TQ-18-3600		TILLERS, SIDE INLETS 4" NST ADAPTERS W/CAPS	1	KMEM
TQ-18-3740		4" NSTF x 4" STORZ KOCHEK SKE-R 30° ADAPTERS FOR SIDE INLET	1	KMEM
TQ-18-3810		INNOVATIVE CONTROLS 2 1/2" GAUGE FOR AERIAL INLET, TILLERS	1	KMEM
TQ-18-4130	>	LADDER, AKRON #3480 "STREAMMASTER II" MONITOR	1	KMEM
TQ-18-4210	>	LADDER, AKRON #5178 NOZZLE	1	KMEM
TQ-18-4300		LADDER, AKRON MONITOR CONTROLS W/ AUTO STOW	1	KMEM
TQ-18-4505		LADDER, ELECTRIC SELECTABLE WATERWAY TROLLEY - NEW	1	KMEM
TQ-18-4950		"STORE FRONT BLITZ" DESCRIPTION	1	KMEM
TQ-20-2100		101' LADDER, TILLER LADDER CAPACITIES	1	KMEM
TQ-50-0200	>	FIRE DEPT AERIAL FAMILIARIZATION - PROVIDED BY REP	1	KMEM
TQ-50-0240	>	REP PROVIDED FAMILIARIZATION - FOUR (4) DAYS	1	KMEM
TQ-50-0600		AERIAL SERVICE, ALL DEVICES	1	KMEM
TQ-50-0700		WARNING DECALS, ALL DEVICES	1	KMEM
TQ-52-0100		AERIAL LADDER, MANUALS, TWO (2) SETS	1	KMEM
TQ-70-2100		101' LADDER, TILLER CERT. & TESTING	1	KMEM
		****** HEADER - PAINT SECTION - ALL UNITS ******	**1**	**KMEM**
UA-00-1100		GENERAL PAINT DESCRIPTION - ALL	1	KMEM
UA-00-1205		GENERAL PRIMER & PREP DESCRIPTION - TDA	1	KMEM
UA-00-1405		GENERAL FINISH PAINT DESCRIPTION - TDA	1	KMEM
UA-00-2705		BODY BUFFING & FINISH - TDA	1	KMEM
		****** HEADER - TDA BODY PAINT ******	**1**	**KMEM**
UA-03-0205		INSIDE/UNDERSIDE BODY PAINTED JOB COLOR - TDA	1	KMEM
UA-03-0305		JOB COLOR COMPARTMENT INT W/SPATTER PAINT - TDA	1	KMEM
UA-03-0905		SINGLE COLOR BODY PAINT SCHEME - TDA	1	KMEM
UA-03-2205		PUMPHOUSE & PLUMBING PAINTED JOB COLOR - TDA	1	KMEM
		****** HEADER - SINGLE AXLE CUSTOM CHASSIS PAINT (AERIAL)**	**1**	**KMEM**
UA-05-0050		CUSTOM CAB PRIMER & PREP	1	KMEM
UA-05-0070		CUSTOM FINISH PAINT & PREP	1	KMEM
UA-05-0100		SINGLE COLOR CUSTOM CAB PAINT SCHEME	1	KMEM
UA-05-0350		CUSTOM CAB BUFFING & FINISH	1	KMEM
UA-05-0365		CUSTOM CAB INTERIOR PAINT - JOB COLOR	1	KMEM
UA-05-0400		CUSTOM CHASSIS GLOSS BLACK COLOR FRAME RAILS	1	KMEM
UA-05-0500		CUSTOM CHASSIS WHEEL AND HUB PAINT - SINGLE AXLE	1	KMEM
UA-06-0200		LADDER, PAINTING, ALL DEVICES, WHITE #91528	1	KMEM
UA-06-0450		EXTENSION CYLINDERS PAINTED TO MATCH LADDER COLOR	1	KMEM
UA-06-0905		TORQUEBOX PAINT - BLACK	1	KMEM
UA-06-1100		OUTRIGER PAINT - SILVER URETHABOND 104	1	KMEM
UA-06-1205		TURNTABLE PAINT - LADDER COLOR	1	KMEM
UA-06-1215		TURNTABLE CONSOLE PAINT - LADDER COLOR	1	KMEM
UA-06-1225		LIFT CYLINDERS CONSOLE PAINT - LADDER COLOR	1	KMEM
UA-06-1500		LADDER RUST INHIBITOR - ALL DEVICES	1	KMEM
UA-06-2110	>	PAINT CODE, SINGLE COLOR, FILL IN BLANKS	1	KMEM
UA-06-2130		PAINT CODES, AERIAL DEVICE - WHITE #91528	1	KMEM
UA-06-2200		PINT OF TOUCH-UP PAINT	1	KMEM
UA-06-2515		FINALIZATION & DETAILING - TDA	1	KMEM
UA-06-2850		RUSTPROOFING WARRANTY, TEN (10) YEAR	1	KMEM

PART NO	S		DESCRIPTION	QTY	ID
			****** HEADER, LETTERING & STRIPING - 100-TDA**	**1**	**KMEM**
UA-12-0500			DELETE KME SUPPLIED LETTERING	1	KMEM
UA-12-1160			SCOTCH-LITE W/ DROP SHADOW LETTERING ON FRONT CAB DOORS	1	DLR
UA-12-1660			SCOTCH-LITE W/ DROP SHADOW LETTERING ON CREW CAB DOORS	1	DLR
UA-12-2145			SCOTCH-LITE W/ DROP SHADOW LETTERING ABOVE WINDSHIELD	1	DLR
UA-12-2600			SCOTCH-CAL W/O DROP SHADOW LETTERING ON FRONT BUMPER	1	DLR
UA-12-2660			SCOTCH-LITE W/ DROP SHADOW LETTERING ON FRONT OF CAB	1	DLR
UA-12-3600			SCOTCH-CAL W/O DROP SHADOW LETTERING ON REAR COMPARTMENT DOOR	1	DLR
UA-14-1215			SCOTCH-CAL W/ TWO COLORS - LOGO	1	DLR
UA-14-1235			LOCATION - CUSTOM LOGO	1	DLR
UA-20-0100			19" X 144" LETTERING PANELS ON BASE SECTION	1	KMEM
UA-20-0200			SIGN PANELS TO PAINTED TO MATCH AERIAL DEVICE COLOR	1	KMEM
UA-20-0600			LETTERING ON AERIAL TO BE PROVIDED BY SALE REP	1	KMEM
UA-50-0300			NFPA REQUIRED SCOTCH-LITE STRIPINGSTRIPING - TDA AERIAL	1	KMEM
UA-50-0315			6" SCOTCH-LITE STRIPE ON CAB AND BODY - TDA AERIAL	1	KMEM
UA-58-5100			WHITE SCOTCH-LITE	1	KMEM
UA-80-6000			REAR CHEVRON STRIPING	1	KMEM
UA-80-6002			50% VERTICAL SURFACE	1	KMEM
UA-80-6050			6" 50% REAR SCOTCH-LITE DIAMOND GRADE CHEVRON STRIPING	1	KMEM
UA-80-6075			RED & FLUORESCENT YELLOW GREEN DIAMOND GRADE SCOTCH-LITE	1	KMEM
			****** PROPOSED - AERIAL WARRANTY PKG, W/PUMP @ REAR OF SPEC**	**1**	**KMEM**
W6-00-000J			PROPOSED - KME WARRANTY, STARTING ON DELIVERY DATE	1	KMEM
W6-00-0010	**X**	<	PROPOSED - 5 YEAR FCAM WARRANTY - CUSTOM CHASSIS	1	
			$19,500 per email Phil to Byron 9-27-16		
W6-00-003M		>	PROPOSED - 5 YEAR WARRANTY - BASE WITH CUSTOM CHASSIS	1	KMEM
W6-00-0150			PROPOSED - 5 YEAR CUMMINS BASE WARRANTY	1	KMEM
W6-00-0210			PROPOSED - 5 YEAR ALLISON EVS TRANSMISSION WARRANTY	1	KMEM
W6-00-0230			PROPOSED - LIFETIME FRAMERAIL WARRANTY	1	KMEM
W6-00-0242			PROPOSED - SHEPPARD STEERING GEAR STANDARD - THREE YEAR WARRANTY	1	KMEM
W6-00-0254			PROPOSED - 5 YEAR MERITOR FRONT AXLE - WARRANTY	1	KMEM
W6-00-0258			PROPOSED - 5 YEAR MERITOR SINGLE AXLE REAR - WARRANTY	1	KMEM
W6-00-0320		>	PROPOSED - 10 YEAR CAB STRUCTURAL WARRANTY	1	KMEM
W6-00-0330			PROPOSED - 10 YEAR BODY STRUCTURAL WARRANTY	1	KMEM
W6-00-0390			PROPOSED - 10 YEAR CAB & BODY CORROSION WARRANTY	1	KMEM
W6-00-0450			PROPOSED - PAINT FINISH WARRANTY, TEN (10) YEAR	1	KMEM
W6-00-0470			PROPOSED - 5 YEAR LETTERING WARRANTY	1	KMEM
W6-00-0490			PROPOSED - 10 YEAR STAINLESS STEEL PIPING WARRANTY	1	KMEM
W6-00-0530			PROPOSED - REAR SUSPENSION - HENDRICKSON AIR RIDE - SGL AXLE -THREE YEAR WARRANT	1	KMEM
W6-00-0570			PROPOSED - SAFEGUARD TECHNOLOGY - 10 YEAR - RUNG COVERS	1	KMEM
W6-00-0590			PROPOSED - 20 YEAR AERIAL LADDER WARRANTY	1	KMEM
W6-00-0650		>	PROPOSED - TEN 10 YEAR AERIAL WATERWAY WARRANTY - AMITY	1	KMEM
W6-00-0655		>	PROPOSED - TEN 10 YEAR AERIAL WATERWAY WARRANTY	1	KMEM
W6-00-0710			PROPOSED - LIFETIME POLY TANK WARRANTY - ALL TANKS	1	KMEM
W6-00-0820			PROPOSED - WATEROUS 5 YEAR PUMP WARRANTY (PARTS & LABOR)	1	KMEM
W6-00-0823	**X**		WATEROUS FCAM 5 YR WARRANTY CORRECTION	1	
W6-00-1330			PROPOSED - AKRON - 5 YEAR LIMITED WARRANTY	1	KMEM
W6-00-1340			PROPOSED - AKRON HEAVY DUTY VALVE - 10 YEAR WARRANTY	1	KMEM
W6-00-1500			PROPOSED - BOSTROM SEATING 5 YEAR WARRANTY	1	KMEM
W6-01-1153			DEALER FURNISHED PICK-UP & DELIVERY DURING WARRANTY	1	DLR
WA-00-0010			"AERIAL FIRE APPARATUS" NFPA 2016 STATEMENT OF EXCEPTIONS	1	KMEM

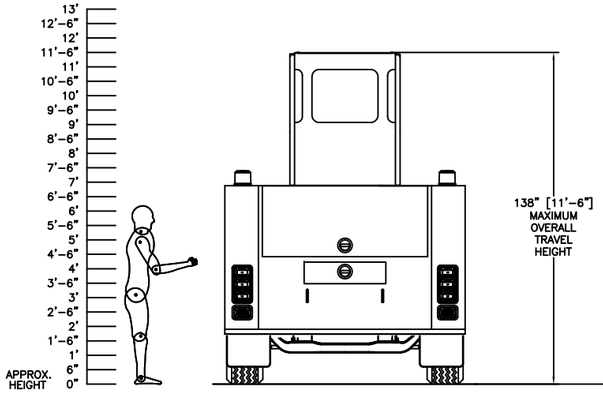

REAR VIEW

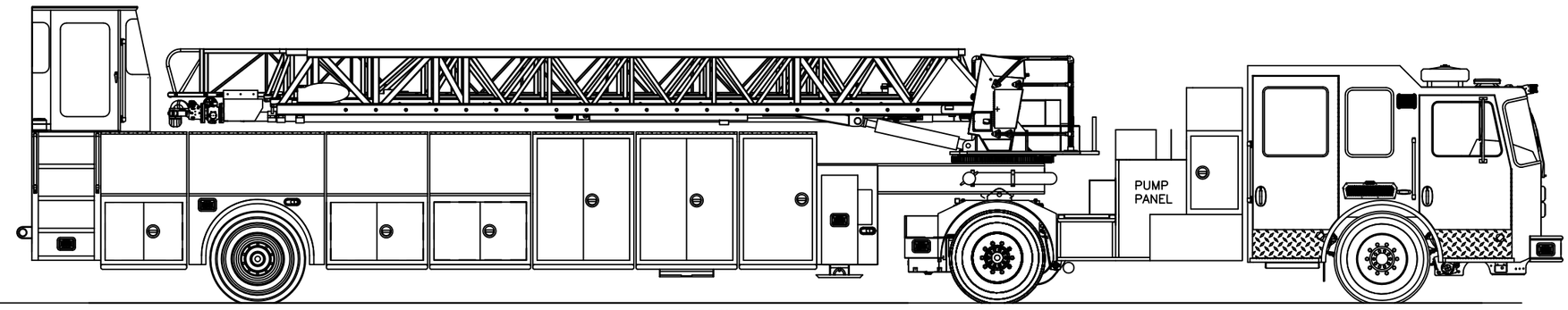

OFFICERS SIDE VIEW

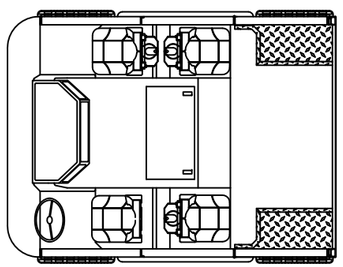

CAB INTERIOR LAYOUT

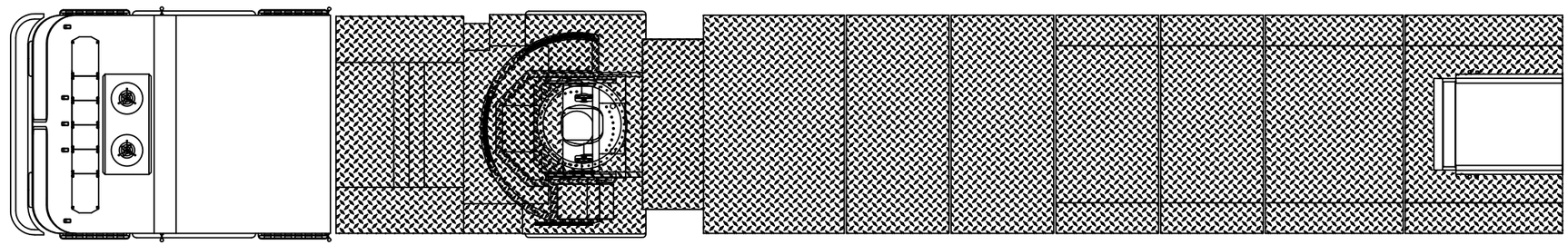

TOP VIEW

FRONT VIEW

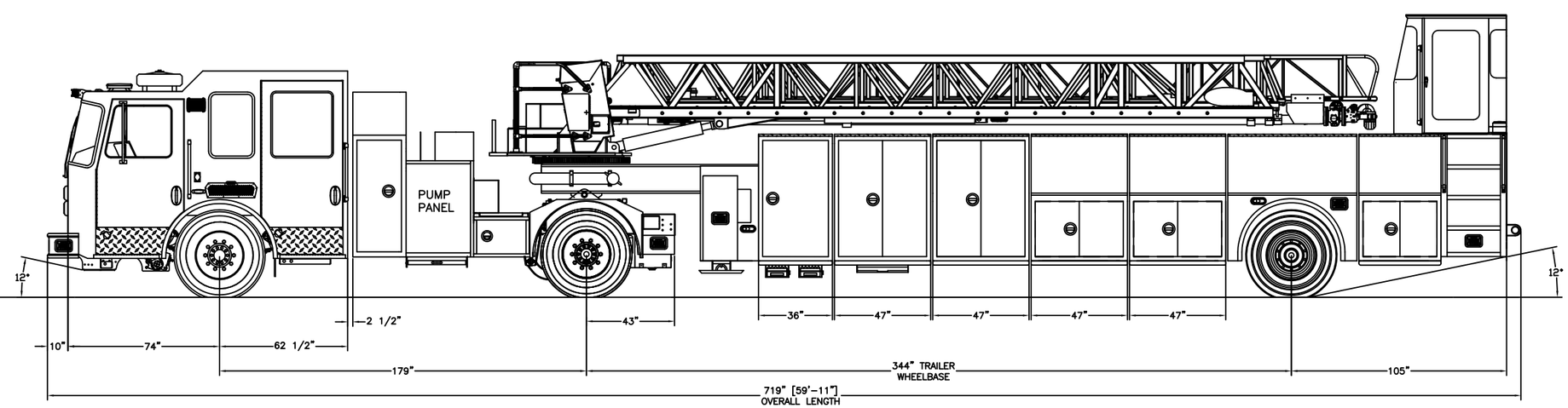

DRIVERS SIDE VIEW

SPECIFICATIONS

CHASSIS: PREDATOR MFD w/ 10" RAISED ROOF
ENGINE: CUMMINS ISX 12 450 HP w/ ENGINE BRAKE
TRANSMISSION: ALLISON 4000EVS 5-SPEED AUTOMATIC
FRONT AXLE: MERITOR MFS-20-133A-N; #21,500
DRIVE AXLE: MERITOR RS-30-185; #31,000
TRAILER AXLE: MERITOR MFS-20-133A-N; #23,000
PUMP: WATEROUS S100; 1,500 GPM SINGLE STAGE PUMP
TANK: 250 GALLONS

NOTES

THIS DRAWING IS A GENERAL CONFIGURATION AND MAY NOT NECESSARILY REFLECT ALL CONTRACTUAL OBLIGATIONS

CUSTOMER APPROVAL

NAME:

TITLE:

DATE:

SYM	DATE	REVISION DESCRIPTION	APP'D

SALES ENGINEER :

DIMENSIONS ARE APPROXIMATE & MAY VARY DUE TO BUILD ADJUSTMENTS

SCALE	DWG SIZE	DRAWN BY	DATE
3/8"=1'	D	Z.ZSCHUNKE	9-26-16
		APPROVED BY P.HOHERCHAK	

101' TRACTOR DRAWN LADDER

MAPC 18 BASIC

PROPOSAL DRAWING

KME FIRE GROUP

KOVATCH MOBILE EQUIPMENT
ONE INDUSTRIAL COMPLEX - NESQUEHONING, PA 18240